Industrial Motors

Commercial &
Appliance Motors

Automation

Digital &
Systems

Energy

Transmission &
Distribution

Coatings

WIN

Three-phase Electric Motor
Technical Catalog Indian Market



Driving efficiency and sustainability

WIN



Standard Features

- 3 years Domestic Warranty [1]
- Efficiency Level: High Efficiency (IE2), Premium Efficiency (IE3) and Super Premium Efficiency (IE4)
- Cooling Method: TEFC (Totally enclosed fan cooled) - IC411
- Rated Output: 0.18 to 500kW
- Number of Poles: 2, 4, 6 and 8 [2]
- Frame Sizes: 71 up to 355A/B
- Frequency: 50Hz (±5%)
- Voltage: 240/415V (±10%) 6 cables (up to 100L)
  415V (±10%) 6 cables (112M and above)
- Combined variation in frequency and voltage (sum of absolute values): 10%
- Ambient Temperature: -20 °C up to 50 °C, at 1000 m.a.s.l.
- Class F insulation
- Degree of Protection: IP55
- Mounting: B3T
- Vibration Level: Grade A
- Continuous Duty: S1
- Paint Shade: Blue RAL 5009 (IE2), Green RAL 6002 (IE3 and IE4)
- Paint Type: 203A (C3 level as per ISO12944-2)
- Shaft Seal: V'Ring seal
- Aluminium nameplate
- Terminal box material: Steel sheet
- Fan Cover: Steel Sheet (for frames 71 to 132M/L and 280S/M to 355A/B)
  Polymeric for frames 160M to W280S/M
- Shielded bearing for frames sizes up to 200
- Grease nipple for frames 225S/M to 355A/B
- Metric threaded cable entries
- WISE® (WEG Insulation System Evolution) [3]
- Insulated NDE endshield for frames 315S/M to 355A/B

Optional Features

- Thermistor PTC 1 or 2 per phase
- Insulated bearing for frame 225S/M and above [4]
- Space heater terminated in main terminal box
- Bearing temperature detector (PT100 – 1 or 2 per bearing) for frames 160 & above terminated in an auxiliary terminal box.
- Winding temperature detector (PT100 – 1 or 2 per phase) for frames 160 & above terminated in an auxiliary terminal box.
- Special service factor
- Class H insulation
- Non-standard voltage and frequency [4]
- Type test (witnessed or unwitnessed)
- Crane duty application (S4 Duty) [4]
- Other mountings
- C-DIN flange up to 132 frame size
- FF flange
- Lip seal or Oil Seal for motors fitted with flange
- Drip cover for vertical shaft-down mounting
- Customized paint shades [4]
- Paint type: 212P/212E (C5 level as per ISO 12944)
- Larger frame motors [4]
- Grease Fitting for frame 160 and above [4]
- Extended grease nipples for frames 225S/M and above [4]
- Plastic cable glands
- Non-standard shaft dimensions [4]
- IP56 / IP65 / IP66 [4]
- Encoder provision [4]
- Roller bearing at DE side for frames 160S/M and above [4]
- EN24 or EN19 grade shaft material for frames 160S/M and above [4]
- Provision for vibration sensors for frames 315S/M to 355A/B
- Double Shaft end (Not identical) [4]
- Double Shaft
- International warranty [4]
- Flying leads
- Compact frame motor

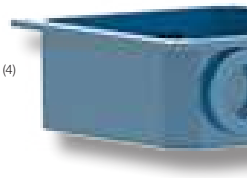

Notes:

(1) Complete warranty term:
WEG Industries (India) Pvt Ltd. (LV Motors – WMO unit) offers domestic warranty (motors operating in India) against defects in workmanship and materials for its LV motors manufactured in India for a period of 30 months from the dispatch date at WEG Hosur factory, limited to 36 months from the date of manufacture stamped on motor nameplate.
(2) 8 Pole motors are available on request.
(3) Suitable for VFD use up to 575V. For further details regarding inverter operation, please contact WEG.
(4) Subject to pre-analysis during offer stage



Certification

- BIS: High Efficiency (IE2), Premium Efficiency (IE3) & Super Premium and Efficiency (IE4) up to 500kW
- CE/UKCA Marking: Premium Efficiency (IE3) except from 75kW to 200kW & Super Premium Efficiency (IE4) complete range
- ISO Certifications :
  - ISO 9001:2015 Quality Management System standard
  - ISO 14001:2015 Environmental Management System standard
  - ISO 45001:2018 Occupational Health and Safety Management System standard

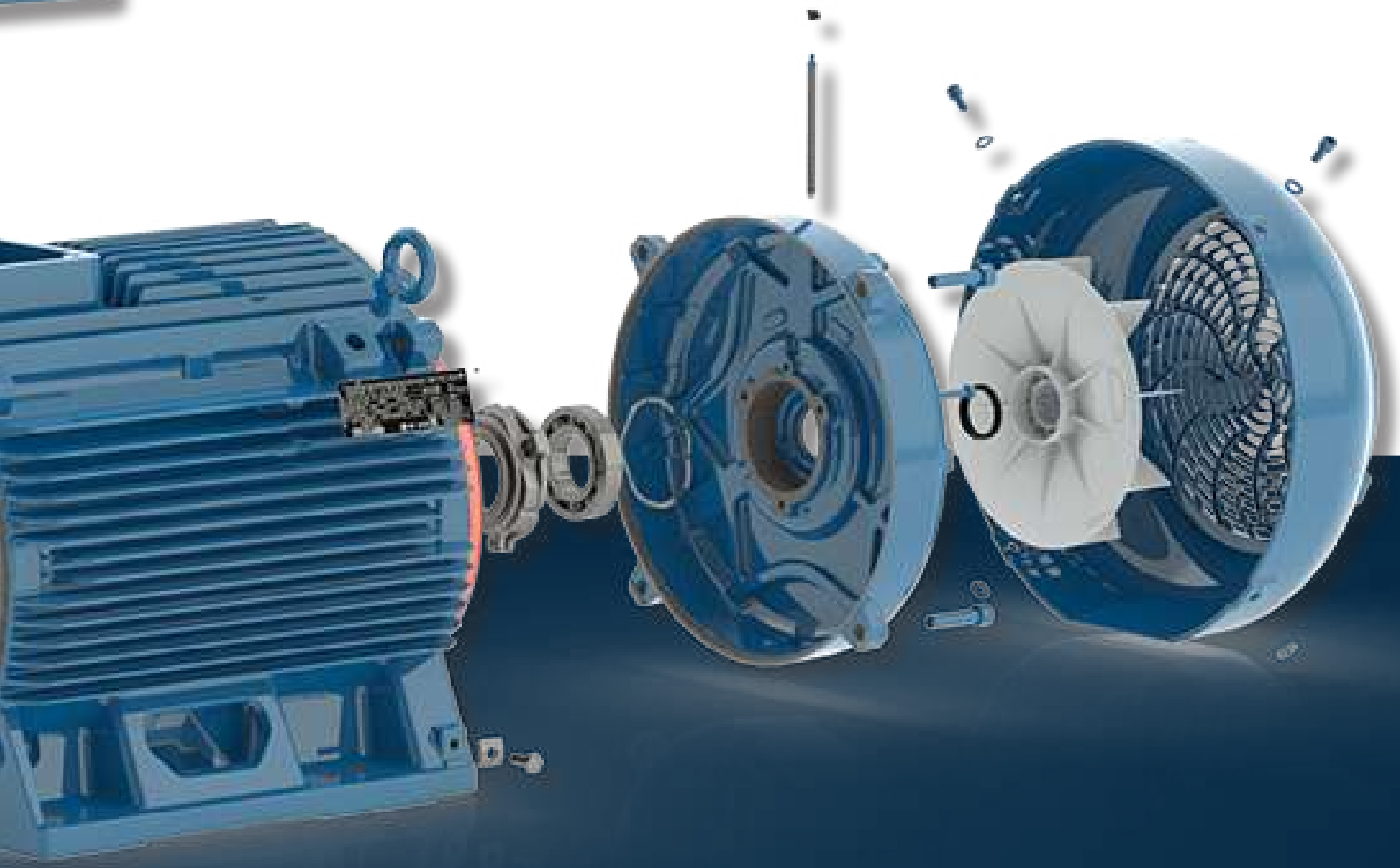

WIN
FROM INDIA
FOR WINNERS

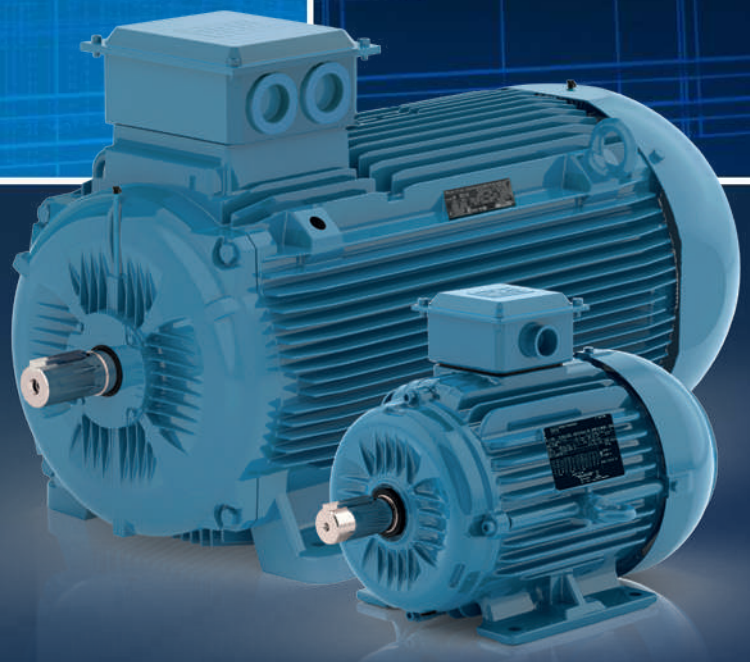

WIN

When we add technological expertise to manufacturing excellence and speed, the result is a reliable and highly efficient solution for a great variety of industrial segments.

Thinking about every detail, WEG releases a line of low voltage motors that carry the technology that the world already knows in a product with standard electrical design for operation with VFD, wide power range and exclusive BIS certification for the Indian market.

Driving efficiency and sustainability

www.weg.net

Electrical Data

Three-phase Electric Induction Motor - Premium Efficiency - IE4 - 50 Hz [1]

Output		Frame	Full Load Torque (Nm)	Locked Rotor Current Il/In	Locked Rotor Torque Tl/Tn	Break-down Torque Tb/Tn	Inertia J (kgm²)	Allowable locked rotor time (s)		Weight (kg)	Sound dB(A)	415 V							
												Rated speed (rpm)	% of full load						Full load current In (A)
													Efficiency			Power Factor			
kW	HP							Hot	Cold				50	75	100	50	75	100	
II Poles																			
0,37	0,5	71	0,1	7,8	2,6	2,9	0,0005	15	33	11	56	2855	73,00	76,40	78,10	0,66	0,78	0,85	0,78
0,55	0,75	71	0,2	7,8	3,2	3,2	0,0005	14	31	12	56	2830	78,60	80,50	81,50	0,63	0,76	0,83	1,13
0,75	1	80	0,3	7,8	3,5	3,6	0,0009	18	40	15	59	2870	79,20	81,80	83,50	0,57	0,70	0,78	1,60
1,1	1,5	L80	0,4	7,8	4,2	3,9	0,0011	19	42	17	59	2865	82,00	83,90	85,20	0,58	0,71	0,79	2,27
1,5	2	L90S	0,5	7,8	3,3	3,5	0,0023	14	31	22	62	2890	84,00	85,60	86,50	0,64	0,75	0,82	2,94
2,2	3	L90L	0,7	8,9	4,0	4,1	0,0032	11	24	26	62	2900	85,40	87,00	88,00	0,62	0,74	0,81	4,29
3	4	100L	1,0	8,9	3,5	4,4	0,0064	12	26	33	67	2920	86,30	88,40	89,10	0,61	0,74	0,80	5,86
3,7	5	L100L	1,2	8,9	3,4	4,1	0,0080	11	24	36	67	2920	88,50	89,80	90,00	0,70	0,82	0,87	6,57
4	5,5	112M	1,3	8,9	3,1	4,0	0,0096	15	33	44	62	2920	87,90	89,50	90,00	0,69	0,80	0,85	7,27
5,5	7,5	132S	1,8	8,9	2,2	3,3	0,0196	22	48	65	63	2935	88,50	90,10	90,90	0,71	0,81	0,85	9,90
7,5	10	L132S	2,5	8,9	3,0	4,1	0,0285	14	31	77	63	2950	88,80	90,60	91,70	0,67	0,78	0,83	14
9,2	12,5	L132M	3,0	8,9	3,0	4,0	0,0356	8	18	85	63	2945	89,80	91,20	92,20	0,71	0,81	0,86	16
11	15	160M	3,6	8,9	3,3	4,5	0,0512	16	35	121	67	2960	90,40	91,90	92,60	0,61	0,73	0,80	21
15	20	160M	4,9	8,9	3,7	4,5	0,0548	18	40	132	67	2955	91,60	92,80	93,30	0,62	0,74	0,80	28
18,5	25	160L	6,1	8,9	3,0	3,7	0,0731	20	44	161	67	2945	93,00	93,50	93,70	0,75	0,84	0,86	32
22	30	180M	7,2	8,9	2,6	4,0	0,0988	19	42	182	67	2960	92,30	93,40	94,00	0,64	0,76	0,80	41
30	40	200M/L	9,9	8,0	3,0	3,3	0,1692	32	70	251	72	2960	92,90	93,90	94,50	0,72	0,81	0,83	53
37	50	200M/L	12,2	8,9	3,5	3,7	0,2138	26	57	281	72	2965	93,20	94,30	94,80	0,73	0,82	0,84	65
45	60	225S/M	14,8	8,9	2,7	3,7	0,2861	30	66	374	74	2970	92,90	94,10	95,00	0,70	0,80	0,83	79
55	75	250S/M	18,0	8,6	3,1	3,4	0,3722	39	86	458	74	2970	93,40	94,40	95,30	0,73	0,82	0,85	95
75	100	W280S/M	24,6	8,9	2,9	3,2	0,5414	28	62	563	74	2965	94,20	94,90	95,60	0,79	0,86	0,87	125
90	125	W280S/M	29,6	8,9	3,1	3,3	0,5752	24	53	583	74	2965	94,40	95,10	95,80	0,78	0,86	0,87	150
110	150	W315S/M	36,0	8,5	2,0	2,8	1,2263	34	75	821	77	2975	94,40	95,30	96,00	0,78	0,85	0,86	185
125	170	W315S/M	40,9	8,9	2,4	3,1	1,6442	29	64	926	77	2980	94,70	95,60	96,20	0,81	0,87	0,89	203
132	175	W315S/M	43,2	8,9	2,4	2,8	1,7331	30	66	950	77	2977	94,90	95,60	96,20	0,83	0,86	0,89	214
150	200	315S/M	49,0	8,7	2,5	3,1	2,2792	34	75	1007	77	2982	94,80	95,70	96,30	0,80	0,86	0,88	246
160	220	315S/M	52,3	8,7	2,2	2,9	2,3552	36	79	1025	77	2980	95,10	95,80	96,30	0,82	0,88	0,88	263
185	250	315S/M	60,4	8,8	2,6	3,1	2,7545	29	64	1111	77	2981	95,50	96,20	96,50	0,79	0,86	0,88	303
200	270	315L	65,3	8,9	3,0	3,2	3,4245	28	62	1295	78	2984	95,10	96,00	96,50	0,79	0,86	0,88	328
225	305	315L	73,5	8,0	2,5	2,6	3,6292	34	75	1324	78	2980	95,60	96,30	96,50	0,82	0,88	0,89	364
250	340	315L	81,8	8,9	2,3	2,4	3,5552	24	53	1324	78	2977	95,60	96,20	96,50	0,84	0,89	0,90	400
280	380	315L	91,4	8,9	3,3	2,5	4,0736	14	31	1419	78	2983	95,60	96,30	96,50	0,79	0,80	0,88	459
300	400	355M/L	97,8	8,9	3,0	3,3	5,3619	8	18	1692	80	2987	95,50	95,90	96,50	0,82	0,88	0,90	481
315	430	355M/L	103,0	8,9	2,6	2,3	5,2547	24	53	1689	80	2986	95,60	96,20	96,50	0,83	0,83	0,89	510
330	450	355M/L	108,0	8,9	3,2	2,3	5,8981	19	42	1792	80	2985	95,80	96,20	96,50	0,85	0,89	0,90	529
355	480	355M/L	116,0	8,9	3,0	2,1	6,0053	21	46	1821	80	2983	95,90	96,30	96,50	0,86	0,90	0,90	569
375	510	355A/B	122,0	8,9	3,4	2,1	7,6139	23	51	2221	83	2986	96,50	96,50	96,50	0,78	0,89	0,90	601
400	550	355A/B	130,0	8,9	3,3	2,2	7,7211	36	79	2237	83	2986	96,50	96,50	96,50	0,85	0,88	0,90	641
450	610	355A/B	147,0	8,9	3,0	2,0	7,6853	32	70	2248	83	2983	96,50	96,50	96,50	0,86	0,90	0,90	721

Note:
(1) Efficiency values are given according to IEC 60034-2-1. They are calculated according to indirect method, with stray load losses determined by measurement.

Three-phase Electric Induction Motor - Premium Efficiency - IE4 - 50 Hz [1]

Output		Frame	Full Load Torque (Nm)	Locked Rotor Current Il/In	Locked Rotor Torque Tl/Tn	Break-down Torque Tb/Tn	Inertia J (kgm²)	Allowable locked rotor time (s)		Weight (kg)	Sound dB(A)	415 V							
												Rated speed (rpm)	% of full load						Full load current In (A)
													Efficiency			Power Factor			
kW	HP							Hot	Cold				50	75	100	50	75	100	
IV Poles																			
0,25	0,33	71	0,2	6,5	3,3	3,3	0,0008	50	110	12	43	1420	70,80	75,00	77,90	0,44	0,56	0,65	0,69
0,37	0,5	80	0,2	7,0	3,5	3,7	0,0026	26	57	15	44	1450	75,20	78,80	81,10	0,51	0,65	0,74	0,86
0,55	0,75	L80	0,4	7,0	4,1	4,3	0,0039	26	57	18	44	1445	78,90	81,80	83,90	0,50	0,64	0,73	1,25
0,75	1	90S	0,5	7,0	2,5	3,4	0,0055	20	44	22	49	1460	81,50	84,20	85,70	0,51	0,65	0,72	1,69
1,1	1,5	L90S	0,7	7,0	2,5	3,0	0,0066	22	48	24	49	1450	85,30	86,40	87,20	0,60	0,72	0,79	2,22
1,5	2	100L	1,0	7,0	3,1	2,9	0,0090	31	68	32	53	1440	87,10	87,80	88,20	0,61	0,73	0,78	3,03
2,2	3	L100L	1,5	8,3	4,8	4,5	0,0119	21	46	37	53	1455	86,30	88,20	89,50	0,47	0,61	0,69	4,96
3	4	112M	2,0	8,3	2,7	3,5	0,0208	23	51	48	56	1465	88,80	89,80	90,40	0,57	0,70	0,76	6,07
3,7	5	132S	2,5	8,3	2,4	3,2	0,0453	20	44	65	56	1470	89,00	90,30	91,10	0,66	0,78	0,83	6,81
4	5,5	132S	2,7	8,3	2,5	3,4	0,0528	20	44	69	56	1470	89,00	90,30	91,10	0,66	0,77	0,84	7,27
5,5	7,5	L132M	3,6	8,3	2,6	3,4	0,0679	20	44	79	56	1470	89,50	91,10	91,90	0,70	0,80	0,85	9,80
7,5	10	L132M/L	5,0	8,3	2,6	3,7	0,0864	16	35	91	56	1470	91,00	91,80	92,60	0,66	0,78	0,82	13,70
9,2	12,5	160M	6,1	8,3	3,1	4,0	0,1193	16	35	130	57	1482	91,40	92,60	93,00	0,63	0,75	0,81	17,00
11	15	160M	7,3	8,3	2,5	3,3	0,1110	24	53	132	57	1475	92,30	93,00	93,30	0,63	0,75	0,81	20,20
15	20	160L	9,9	8,3	3,0	3,8	0,1527	22	48	166	57	1476	92,50	93,50	93,90	0,60	0,73	0,78	28,50
18,5	25	180M	12,2	8,3	3,1	3,7	0,1902	25	55	195	62	1475	93,00	93,90	94,20	0,60	0,72	0,78	35,00
22	30	180L	14,5	8,3	3,6	3,9	0,2248	26	57	224	62	1475	93,30	94,10	94,50	0,59	0,72	0,79	41,00
30	40	200M/L	19,8	8,3	2,6	3,3	0,3581	28	62	283	63	1477	94,50	94,90	94,90	0,67	0,78	0,82	53,60
37	50	225S/M	24,3	8,3	2,5	3,2	0,4914	48	106	356	64	1482	94,10	94,80	95,20	0,67	0,78	0,82	65,90
45	60	225S/M	29,6	8,3	2,9	3,5	0,5897	43	95	386	64	1483	94,10	94,90	95,40	0,65	0,76	0,80	82,00
55	75	250S/M	36,1	8,3	3,0	3,1	0,8430	38	84	478	64	1484	94,90	95,50	95,70	0,69	0,79	0,83	96,30
75	100	W280S/M	49,2	8,9	3,1	3,2	1,2140	32	70	593	64	1484	95,40	95,80	96,00	0,71	0,81	0,83	131
90	125	W280S/M	59,0	8,9	3,9	3,8	1,2814	26	57	612	64	1486	95,10	95,70	96,10	0,65	0,77	0,81	161
110	150	W315S/M	72,0	8,9	3,1	3,5	2,6094	20	44	881	69	1489	95,00	95,80	96,30	0,61	0,73	0,78	204
125	170	W315S/M	81,7	8,9	3,3	3,6	3,0699	18	40	951	69	1490	95,20	95,90	96,40	0,62	0,73	0,78	231
132	175	W315S/M	86,3	8,9	3,5	3,8	3,1466	17	37	964	69	1490	95,10	95,90	96,40	0,60	0,72	0,77	247
150	200	315S/M	98,0	8,2	2,9	3,0	3,6387	30	66	1038	71	1491	95,40	96,10	96,60	0,66	0,77	0,81	267
160	220	315S/M	105,0	8,2	2,7	2,8	3,7489	29	64	1053	71	1490	95,60	96,20	96,60	0,70	0,80	0,83	278
185	250	315S/M	121,0	8,4	3,2	3,1	4,5208	25	55	1151	71	1491	95,70	96,30	96,70	0,68	0,78	0,82	325
200	270	315L	131,0	8,6	2,7	2,6	4,9389	32	70	1266	73	1490	96,20	96,60	96,70	0,72	0,81	0,84	343
225	305	315L	147,0	8,6	3,3	2,9	5,7735	25	55	1362	73	1491	95,90	96,50	96,70	0,73	0,82	0,85	381
250	340	315L	163,0	8,9	3,0	2,4	6,3952	25	55	1450	73	1490	96,50	96,70	96,70	0,72	0,81	0,85	423
280	380	315L	183,0	8,9	3,0	3,0	6,3805	19	42	1450	73	1490	96,40	96,70	96,70	0,71	0,80	0,85	474
300	400	315L	196,0	8,9	3,5	3,2	6,8838	16	35	1504	73	1492	95,70	96,50	96,70	0,70	0,80	0,82	526
315	430	355M/L	206,0	8,2	2,5	2,3	9,5447	21	46	1724	74	1492	95,50	96,20	96,70	0,73	0,81	0,81	559
330	450	355M/L	216,0	8,2	2,6	2,3	10,3600	20	44	1813	74	1491	95,80	96,40	96,70	0,73	0,81	0,81	586
355	480	355M/L	232,0	8,2	2,4	2,1	10,3600	18	40	1813	74	1490	95,80	96,30	96,70	0,75	0,82	0,82	623
375	510	355M/L	245,0	8,2	3,0	2,3	11,1655	15	33	1886	74	1492	95,60	96,30	96,70	0,73	0,81	0,81	666
400	550	355A/B	261,0	8,2	3,0	2,5	11,9676	14	31	2136	76	1492	95,90	96,60	96,70	0,66	0,77	0,81	710
450	610	355A/B	294,0	8,9	3,5	2,7	13,9325	12	26	2338	76	1493	95,60	96,50	96,70	0,61	0,73	0,79	820
500	680	355A/B	326,0	8,9	3,0	2,4	14,6170	12	26	2416	76	1492	96,10	96,70	96,70	0,67	0,78	0,82	877

Note:
(1) Efficiency values are given according to IEC 60034-2-1. They are calculated according to indirect method, with stray load losses determined by measurement.

Three-phase Electric Induction Motor - Premium Efficiency - IE4 - 50 Hz [1]

Output		Frame	Full Load Torque (Nm)	Locked Rotor Current Il/In	Locked Rotor Torque Tl/Tn	Break-down Torque Tb/Tn	Inertia J (kgm²)	Allowable locked rotor time (s)		Weight (kg)	Sound dB(A)	415 V							
												Rated speed (rpm)	% of full load						Full load current In (A)
													Efficiency			Power Factor			
kW	HP							Hot	Cold				50	75	100	50	75	100	
VI Poles																			
0,18	0,25	80	0,2	7,0	2,3	2,7	0,0029	17	37	15	43	965	59,60	65,30	70,10	0,43	0,54	0,64	0,56
0,25	0,33	80	0,3	7,0	2,0	2,5	0,0027	19	42	15	43	945	68,20	71,50	74,10	0,51	0,63	0,72	0,65
0,37	0,5	L80	0,4	7,2	2,7	3,1	0,0037	20	44	17	43	950	72,00	75,10	78,00	0,45	0,58	0,67	0,99
0,55	0,75	90S	0,6	7,3	2,1	2,3	0,0060	18	40	22	45	940	77,80	79,70	80,90	0,50	0,63	0,71	1,33
0,75	1	L90L	0,8	7,1	2,4	2,6	0,0077	18	40	25	45	950	80,20	81,70	82,70	0,47	0,61	0,68	1,86
1,1	1,5	100L	1,1	7,0	2,9	2,9	0,0126	28	62	31	44	960	80,60	83,10	84,50	0,44	0,57	0,66	2,74
1,5	2	L100L	1,5	7,0	2,8	3,0	0,0176	35	77	36	44	965	82,30	84,50	85,90	0,45	0,58	0,66	3,68
2,2	3	L112M	2,2	7,4	3,2	3,4	0,0275	26	57	47	49	965	84,80	86,50	87,40	0,46	0,59	0,66	5,31
3	4	132S	3,0	7,3	2,7	2,9	0,0568	40	88	72	53	976	86,00	87,60	88,60	0,48	0,61	0,68	6,93
3,7	5	132M	3,7	7,8	3,0	3,2	0,0681	42	92	79	53	977	86,40	88,10	89,50	0,46	0,59	0,66	8,71
4	5,5	L132M	4,0	7,1	2,2	2,5	0,0717	50	110	81	53	970	87,60	88,60	89,50	0,52	0,64	0,71	8,76
45	60	280S/M	44,3	7,4	2,4	3,1	2,4652	33	73	623	65	990	93,60	94,50	94,80	0,61	0,72	0,77	86
55	75	280S/M	54,1	7,8	2,5	3,2	2,8014	30	66	660	65	990	93,90	94,80	95,10	0,60	0,72	0,77	104
75	100	315S/M	73,6	7,8	2,2	2,9	4,3398	36	79	891	67	992	94,20	94,90	95,40	0,59	0,71	0,76	144
90	125	315S/M	88,4	7,8	2,2	2,8	5,2439	32	70	962	67	992	94,70	95,30	95,60	0,62	0,73	0,78	168
110	150	315S/M	108,0	8,0	2,9	3,1	6,1481	28	62	1037	67	993	94,50	95,30	95,80	0,57	0,70	0,76	210
125	170	315S/M	123,0	8,1	2,9	3,1	7,0522	27	59	1110	67	993	94,80	95,50	96,00	0,59	0,71	0,76	238
132	175	315S/M	130,0	8,2	2,4	2,8	7,2330	26	57	1123	67	992	95,10	95,60	96,00	0,63	0,74	0,78	245
150	200	315L	147,0	8,2	2,7	2,9	9,0228	28	62	1309	68	993	94,80	95,70	96,20	0,62	0,73	0,79	275
160	220	315L	157,0	8,2	2,6	2,7	8,8424	26	57	1309	68	992	94,90	95,70	96,20	0,63	0,74	0,78	297
185	250	315L	182,0	8,2	2,6	2,7	10,8274	26	57	1462	68	992	95,20	95,90	96,30	0,64	0,75	0,80	334
200	270	355M/L	196,0	8,3	1,7	2,1	11,3029	50	110	1656	73	993	95,00	95,80	96,30	0,66	0,76	0,78	370
225	305	355M/L	221,0	8,3	1,9	2,2	12,2256	50	110	1735	73	993	95,00	95,90	96,50	0,64	0,75	0,78	416
250	340	355M/L	245,0	8,3	1,8	2,1	13,1482	50	110	1807	73	993	95,10	95,90	96,50	0,66	0,76	0,77	468
280	380	355M/L	275,0	8,3	2,0	2,2	14,5602	43	95	1915	73	993	95,00	95,90	96,50	0,64	0,75	0,76	531
300	400	355A/B	294,0	8,3	2,0	2,2	15,7158	42	92	2159	73	993	95,00	95,90	96,60	0,64	0,74	0,78	554
315	430	355A/B	309,0	8,3	2,1	2,3	17,5647	41	90	2301	73	993	95,00	96,00	96,60	0,64	0,74	0,78	582
330	450	355A/B	324,0	8,3	2,0	2,2	17,1024	38	84	2269	73	993	95,10	95,90	96,60	0,64	0,74	0,78	609
355	480	355A/B	349,0	8,3	1,9	2,1	16,8390	34	75	2253	73	992	95,10	95,90	96,60	0,64	0,74	0,78	655
375	510	355A/B	368,0	8,3	1,9	2,1	19,6070	35	77	2474	73	992	95,30	96,00	96,60	0,65	0,76	0,78	692
400	550	355A/B	392,0	8,3	2,5	2,4	19,6070	29	64	2474	73	994	94,80	95,80	96,60	0,58	0,70	0,76	758

Note:
(1) Efficiency values are given according to IEC 60034-2-1. They are calculated according to indirect method, with stray load losses determined by measurement.

Three-phase Electric Induction Motor - Premium Efficiency - IE3 - 50 Hz [1]

Output		Frame	Full Load Torque (Nm)	Locked Rotor Current Il/In	Locked Rotor Torque Tl/Tn	Break-down Torque Tb/Tn	Inertia J (kgm²)	Allowable locked rotor time (s)		Weight (kg)	Sound dB(A)	415 V								
												Rated speed (rpm)	% of full load						Full load current In (A)
													Efficiency			Power Factor			
kW	HP							Hot	Cold				50	75	100	50	75	100	
II Poles																			
0.37	0.5	71	1.25	7.0	2.2	2.4	0.0004	16	35	10.0	56	2835	69.1	72.9	73.8	0.59	0.72	0.80	0.872
0.55	0.75	71	1.85	7.0	2.7	2.8	0.0005	15	33	11.0	56	2840	76.6	77.0	77.8	0.63	0.76	0.84	1.17
0.75	1	80	2.52	7.0	2.9	2.9	0.0008	20	44	15.0	59	2845	79.2	80.7	80.7	0.62	0.75	0.82	1.58
1.1	1.5	80	3.70	7.0	4.2	3.6	0.0009	18	40	16.0	59	2840	80.4	82.6	82.7	0.55	0.69	0.80	2.31
1.5	2	L90S	4.95	7.0	2.6	3.2	0.0022	11	24	20.0	62	2895	81.0	83.2	84.2	0.59	0.72	0.80	3.10
2.2	3	90L	7.30	7.7	3.6	3.5	0.0025	13	29	23.0	62	2880	84.1	85.9	85.9	0.59	0.72	0.80	4.45
3	4	100L	9.92	7.7	2.8	3.3	0.0053	13	29	31.0	67	2890	86.8	87.1	87.1	0.71	0.82	0.86	5.57
3.7	5	100L	12.2	7.7	3.4	3.4	0.0064	12	26	33.0	67	2895	87.0	87.8	87.8	0.74	0.84	0.88	6.66
4	5.5	112M	13.2	7.7	2.4	3.3	0.0096	13	29	42.0	62	2900	88.0	88.1	88.1	0.77	0.86	0.88	7.18
5.5	7.5	132S	17.9	7.7	2.4	3.5	0.0207	12	26	62.0	63	2944	86.9	88.5	89.2	0.68	0.79	0.85	10.1
7.5	10	L132S	24.4	7.7	2.4	3.2	0.0234	17	37	73.0	63	2940	88.5	89.8	90.1	0.77	0.85	0.89	13.0
9.2	12.5	L132M	29.9	7.7	2.7	3.4	0.0303	17	37	83.0	63	2940	89.5	90.7	90.7	0.76	0.85	0.89	15.9
11	15	160M	35.6	7.0	2.6	3.4	0.0306	16	35	108	67	2950	89.6	90.7	91.2	0.67	0.78	0.84	20.0
15	20	160M	48.7	7.0	2.7	3.4	0.0444	14	31	137	67	2940	91.3	91.9	91.9	0.75	0.84	0.88	25.8
18.5	25	160L	60.1	7.7	2.8	3.5	0.0555	14	31	153	67	2940	92.2	92.4	92.4	0.76	0.85	0.88	31.7
22	30	180M	71.1	7.7	2.2	3.1	0.1081	13	29	190	67	2955	92.0	92.7	92.7	0.76	0.84	0.86	38.4
30	40	200M/L	96.8	7.0	3.1	3.1	0.1695	19	42	238	72	2960	92.0	93.0	93.3	0.71	0.81	0.86	52.0
37	50	200M/L	119	7.0	3.3	3.2	0.2119	17	37	312	72	2960	93.0	93.7	93.7	0.75	0.83	0.86	63.9
45	60	225S/M	145	7.0	2.5	3.2	0.3566	18	40	349	74	2965	92.4	93.4	94.0	0.74	0.82	0.86	77.4
55	75	250S/M	177	7.0	2.8	3	0.3553	20	44	426	74	2965	92.6	93.6	94.3	0.74	0.82	0.86	94.4
75	100	W280S/M	242	7.0	3.1	2.9	0.5414	18	40	537	74	2960	93.8	94.4	94.7	0.80	0.87	0.89	124
90	125	W280S/M	291	7.0	2.9	3	0.5583	31	68	573	74	2960	94.3	94.9	95.0	0.80	0.86	0.88	150
110	150	W315S/M	353	7.0	2	2.7	1.24	34	75	815	77	2975	94.3	95.2	95.2	0.82	0.87	0.89	181
125	170	W315S/M	401	7.0	2.1	2.5	1.62	37	81	925	77	2975	94.7	95.3	95.3	0.82	0.87	0.89	205
132	175	W315S/M	424	7.0	2.5	2.9	1.71	31	68	958	77	2975	94.7	95.4	95.4	0.80	0.86	0.88	219
150	200	315S/M	481	7.7	2.2	2.9	1.31	41	90	1005	77	2979	94.5	95.5	95.5	0.81	0.86	0.88	248
160	220	315S/M	513	7.7	2.4	3.2	1.31	37	81	1010	77	2981	94.8	95.6	95.6	0.79	0.85	0.88	265
185	250	315S/M	593	7.7	2.7	3.1	1.61	34	75	1120	77	2982	95.2	95.7	95.7	0.80	0.87	0.89	302
200	270	315L	640	7.7	2.9	3.3	3.42	32	70	1295	78	2984	94.8	95.8	95.8	0.77	0.85	0.88	330
225	305	315L	721	7.7	2.6	2.6	3.57	34	75	1330	78	2981	95.3	95.8	95.8	0.82	0.87	0.90	363
250	340	315L[2]	802	7.7	2.3	2.3	3.57	24	53	1335	78	2977	95.3	95.8	95.8	0.85	0.88	0.90	403
280	380	315L[2]	898	7.7	2.5	2.8	4.07	25	55	1430	78	2980	95.1	95.8	95.8	0.81	0.88	0.90	452
300	400	355M/L[2]	962	7.7	2.5	2.5	4.83	24	53	1690	80	2981	95.0	95.4	95.4	0.88	0.90	0.91	481
315	430	355M/L[2]	1008	7.7	2.3	2.6	5.25	28	62	1700	80	2985	95.4	95.8	95.8	0.84	0.88	0.90	508
330	450	355M/L[2]	1057	7.7	2.2	2.4	5.90	34	75	1800	80	2983	95.2	95.8	95.8	0.84	0.85	0.90	532
355	480	355M/L[2]	1137	7.7	2.5	2.6	6.01	27	59	1850	80	2982	95.3	95.8	95.8	0.78	0.80	0.89	579
Optionals																			
5.5	7.5	L112M	18.1	7.7	3.0	3.8	0.0116	14	31	50.0	62	2905	88.4	89.2	89.2	0.74	0.84	0.87	9.86
9.2	12.5	160M	29.8	7.0	2.3	3.5	0.0367	19	42	105	67	2950	89.0	90.2	90.7	0.65	0.77	0.83	17.0
200	270	355M/L	640	7.7	1.8	2.7	3.65	49	108	1425	80	2985	94.5	95.3	95.8	0.81	0.87	0.88	330
225	305	355M/L	721	7.7	2	2.3	4.63	46	101	1590	80	2982	95.0	95.6	95.8	0.86	0.90	0.91	359
250	340	355M/L	800	7.7	2.4	2.9	4.74	41	90	1600	80	2985	95.2	95.8	95.8	0.85	0.89	0.90	403
280	380	355M/L[2]	897	7.7	2.5	2.5	5.28	29	64	1685	80	2982	95.2	95.7	95.8	0.86	0.90	0.91	447

Note:
(1) Efficiency values are given according to IEC 60034-2-1. They are calculated according to indirect method, with stray load losses determined by measurement.
(2) Motor with class F temperature rise.

Three-phase Electric Induction Motor - Premium Efficiency - IE3 - 50 Hz [1]

Output		Frame	Full Load Torque (Nm)	Locked Rotor Current Il/In	Locked Rotor Torque Tl/Tn	Break-down Torque Tb/Tn	Inertia J (kgm²)	Allowable locked rotor time (s)		Weight (kg)	Sound dB(A)	415 V							
												Rated speed (rpm)	% of full load						Full load current In (A)
													Efficiency			Power Factor			
kW	HP							Hot	Cold				50	75	100	50	75	100	
IV Poles																			
0.25	0.33	71	1.69	6.0	2.2	2.4	0.0008	48	106	11.0	43	1415	70.3	73.5	73.5	0.47	0.60	0.71	0.666
0.37	0.5	71	2.55	6.5	2.8	2.7	0.0008	50	110	12.0	43	1385	75.4	77.3	77.3	0.47	0.61	0.72	0.925
0.55	0.75	80	3.67	6.5	2.5	2.9	0.0034	22	48	17.0	44	1430	79.5	80.8	80.8	0.57	0.71	0.79	1.20
0.75	1	80	5.03	6.5	3.2	3.4	0.0034	19	42	17.0	44	1425	78.6	80.5	82.5	0.54	0.69	0.79	1.60
1.1	1.5	90S	7.25	6.5	2.5	2.9	0.0052	15	33	21.0	49	1450	82.3	84.0	84.1	0.55	0.68	0.77	2.36
1.5	2	90L	9.88	6.5	2.9	3.1	0.0066	12	26	23.0	49	1450	83.9	84.9	85.3	0.57	0.70	0.77	3.18
2.2	3	100L	14.6	7.5	3.8	3.4	0.0090	19	42	33.0	53	1440	86.1	86.5	86.7	0.57	0.70	0.79	4.47
3	4	L100L	19.9	7.5	4.2	3.6	0.0120	17	37	38.0	53	1440	87.2	87.7	87.7	0.58	0.71	0.79	6.02
3.7	5	112M	24.4	7.5	2.5	3.1	0.0156	18	40	42.0	56	1450	87.2	88.4	88.4	0.60	0.72	0.78	7.47
4	5.5	112M	26.4	7.5	2.5	3	0.0180	17	37	45.0	56	1445	88.0	88.5	88.6	0.57	0.71	0.78	8.05
5.5	7.5	132S	35.7	7.5	2.1	3	0.0434	10	22	69.0	56	1470	88.0	89.6	89.6	0.68	0.78	0.84	10.2
7.5	10	132M	49.1	7.5	2.1	2.8	0.0643	14	31	77.0	56	1460	89.5	90.0	90.4	0.77	0.84	0.87	13.3
9.2	12.5	132M/L	60.0	7.5	2.5	3.3	0.0788	11	24	86.0	56	1465	89.5	91.0	91.0	0.70	0.80	0.83	16.9
11	15	160M	71.3	7.0	2.5	3	0.0730	16	35	122	57	1475	90.0	91.4	91.4	0.66	0.78	0.83	20.2
15	20	160L	97.2	7.0	2.8	3.2	0.1023	14	31	154	57	1475	91.0	92.1	92.1	0.65	0.78	0.84	27.0
18.5	25	180M	120	7.0	3	3.1	0.1914	16	35	186	62	1475	92.6	92.6	92.6	0.66	0.77	0.84	33.1
22	30	180L	143	7.5	3.2	3.4	0.2262	15	33	213	62	1475	92.2	92.2	93.0	0.64	0.76	0.82	40.1
30	40	200M/L	194	7.0	2.9	3.2	0.3609	18	40	270	63	1475	92.7	93.5	93.6	0.71	0.81	0.85	52.5
37	50	225S/M	239	7.0	2.4	2.8	0.6447	26	57	326	64	1480	93.2	93.5	93.9	0.65	0.76	0.84	65.3
45	60	225S/M	291	7.0	3.1	3.3	0.7804	23	51	355	64	1480	92.9	93.9	94.2	0.66	0.77	0.82	81.0
55	75	250S/M	354	7.0	2.8	2.9	0.8430	18	40	461	64	1485	93.9	94.5	94.6	0.70	0.80	0.84	96.3
75	100	W280S/M	484	7.0	2.9	2.9	1.25	16	35	573	64	1480	94.0	94.5	95.0	0.73	0.82	0.84	131
90	125	W280S/M	581	7.0	2.9	2.9	1.21	33	73	596	64	1480	94.0	94.7	95.2	0.73	0.82	0.85	155
110	150	W315S/M	707	7.0	2.6	2.9	2.40	23	51	846	69	1487	95.0	95.4	95.4	0.72	0.81	0.84	191
125	170	W315S/M	803	7.0	2.7	2.8	2.93	22	48	910	69	1487	95.3	95.6	95.6	0.70	0.79	0.83	219
132	175	W315S/M	848	7.0	2.6	2.7	3.16	21	46	964	69	1487	95.5	95.6	95.6	0.72	0.82	0.84	229
150	200	315S/M	961	7.7	3.2	3.4	2.40	28	62	1010	71	1492	94.5	95.5	95.8	0.63	0.74	0.80	272
160	220	315S/M	1025	7.7	3.3	3.3	2.55	25	55	1040	71	1492	94.4	95.5	95.8	0.62	0.74	0.81	287
185	250	315S/M	1185	7.7	3.4	3.4	2.92	25	55	1120	71	1492	94.9	95.8	95.9	0.64	0.75	0.80	335
200	270	315L	1283	7.7	2.9	2.9	4.52	29	64	1215	73	1490	95.9	96.0	96.0	0.71	0.80	0.84	345
225	305	315L	1442	7.7	3.2	2.9	5.75	25	55	1360	73	1491	95.8	96.0	96.0	0.73	0.82	0.85	384
250	340	315L	1602	7.7	3.2	3	6.39	27	59	1450	73	1491	95.7	96.0	96.0	0.72	0.81	0.85	426
280	380	315L[2]	1796	7.7	3	3	6.38	20	44	1450	73	1490	95.5	96.0	96.0	0.71	0.80	0.85	477
300	400	315L[2]	1925	7.7	2.9	2.7	6.49	22	48	1470	73	1489	95.5	96.0	96.0	0.73	0.82	0.85	511
315	430	355M/L[2]	2017	7.7	3	3	9.49	18	40	1730	74	1492	95.0	96.0	96.0	0.70	0.80	0.84	543
330	450	355M/L[2]	2115	7.7	2.6	2.6	10.4	19	42	1815	74	1491	95.8	96.0	96.0	0.77	0.84	0.86	556
355	480	355M/L[2]	2273	7.7	2.6	2.8	10.4	16	35	1820	74	1492	95.6	96.0	96.0	0.72	0.81	0.84	612
Optionals																			
9.2	12.5	160M	59.6	7.0	2.2	3.1	0.0908	17	37	115	57	1475	90.1	90.8	91.0	0.64	0.76	0.82	17.2
225	305	355M/L	1440	7.7	3	3.2	7.56	20	44	1520	74	1493	94.9	95.9	96.0	0.68	0.78	0.83	393
250	340	355M/L	1601	7.7	2.6	2.9	8.27	28	62	1600	74	1492	95.0	96.0	96.0	0.70	0.80	0.85	426
280	380	355M/L[2]	1793	7.7	2.7	2.7	8.99	20	44	1670	74	1492	95.6	96.0	96.0	0.74	0.82	0.85	477
300	400	355M/L[2]	1924	7.7	2.5	2.5	8.95	17	37	1675	74	1490	95.7	96.0	96.0	0.74	0.82	0.85	511

Note:
(1) Efficiency values are given according to IEC 60034-2-1. They are calculated according to indirect method, with stray load losses determined by measurement.
(2) Motor with class F temperature rise.

Three-phase Electric Induction Motor - Premium Efficiency - IE3 - 50 Hz [1]

Output		Frame	Full Load Torque (Nm)	Locked Rotor Current Il/In	Locked Rotor Torque Tl/Tn	Break-down Torque Tb/Tn	Inertia J (kgm²)	Allowable locked rotor time (s)		Weight (kg)	Sound dB(A)	415 V							
												Rated speed (rpm)	% of full load						Full load current In (A)
													Efficiency			Power Factor			
kW	HP							Hot	Cold				50	75	100	50	75	100	
VI Poles [3]																			
0.18	0.25	71	1.85	6.5	2.6	2.1	0.0009	50	110	12.0	43	930	56.5	62.3	63.9	0.33	0.42	0.57	0.688
0.25	0.33	80	2.50	6.5	2	2.4	0.0027	27	59	15.0	43	955	60.4	67.0	68.6	0.45	0.57	0.70	0.724
0.37	0.5	80	3.80	6.5	2.3	2.3	0.0030	33	73	16.0	43	930	70.3	73.3	73.5	0.49	0.62	0.73	0.959
0.55	0.75	L80	5.59	6.5	3	2.7	0.0037	25	55	18.0	43	940	72.2	75.5	77.2	0.47	0.60	0.72	1.38
0.75	1	L90S	7.66	6.5	2.2	2.4	0.0066	30	66	28.0	45	935	77.5	78.3	78.9	0.53	0.65	0.71	1.86
1.1	1.5	100L	11.1	6.5	2.5	2.4	0.0093	37	81	27.0	44	950	79.0	81.0	81.0	0.54	0.66	0.73	2.59
1.5	2	L100L	14.9	6.5	2.2	2.5	0.0176	25	55	30.0	44	960	79.4	81.6	82.5	0.50	0.60	0.72	3.51
2.2	3	112M	22.1	7.5	2.4	2.5	0.0220	25	55	42.0	49	950	83.3	84.0	84.3	0.53	0.63	0.73	4.97
3	4	132S	29.6	7.5	2	2.5	0.0530	26	57	65.0	53	970	84.7	85.0	85.6	0.54	0.66	0.73	6.68
3.7	5	132S	36.6	7.5	2.2	2.4	0.0435	34	75	65.0	53	965	85.3	86.4	86.5	0.57	0.68	0.74	8.04
4	5.5	132M	39.2	7.0	2.5	2.7	0.0643	21	46	72.0	53	975	84.0	86.0	86.8	0.48	0.61	0.73	8.78
5.5	7.5	132M/L	54.2	7.5	3	2.9	0.0719	32	70	82.0	53	970	87.1	88.0	88.0	0.47	0.60	0.72	12.1
45	60	280S/M	435	7.5	2.4	2.9	2.70	26	57	555	65	988	92.0	93.7	93.7	0.61	0.72	0.78	85.7
55	75	280S/M	532	7.5	2.4	2.8	2.92	23	51	590	65	988	93.0	94.1	94.1	0.63	0.74	0.80	102
75	100	315S/M	722	7.7	2.5	3	2.69	40	88	890	67	993	94.0	94.6	94.6	0.63	0.74	0.80	138
90	125	315S/M	866	7.7	2.5	3	3.22	39	86	970	67	993	94.5	94.9	94.9	0.60	0.73	0.80	165
110	150	315S/M	1060	7.7	2.4	2.8	3.44	30	66	1000	67	992	94.7	95.1	95.1	0.62	0.74	0.80	201
125	170	315S/M	1203	7.7	2.5	3	4.02	26	57	1065	67	993	94.0	95.0	95.3	0.65	0.75	0.80	228
132	175	315S/M	1270	7.7	2.7	3	4.25	27	59	1100	67	993	94.8	95.3	95.4	0.64	0.75	0.80	241
150	200	315L	1443	7.7	2.9	2.9	7.96	23	51	1240	68	993	94.3	95.3	95.5	0.60	0.72	0.80	273
160	220	315L[2]	1540	7.7	2.9	2.4	8.15	23	51	1250	68	993	94.5	95.0	95.6	0.61	0.73	0.79	295
185	250	315L[2]	1780	7.7	2.9	3	9.04	20	44	1330	68	993	94.0	94.9	95.7	0.60	0.72	0.80	336
200	270	355M/L	1923	7.7	2.1	2.6	11.3	50	110	1660	73	994	94.2	95.3	95.8	0.62	0.73	0.80	363
225	305	355M/L	2163	7.7	2.2	2.5	12.2	50	110	1735	73	994	92.6	94.4	95.8	0.45	0.58	0.79	414
250	340	355M/L	2403	7.7	2.4	2.7	12.7	42	92	1770	73	994	94.5	95.5	95.8	0.62	0.73	0.79	460
280	380	355M/L	2689	7.7	2.7	3	14.1	35	77	1880	73	995	94.0	95.0	95.8	0.57	0.68	0.75	542
300	400	355M/L	2884	7.7	2.4	2.7	14.6	38	84	1920	73	994	94.0	95.5	95.8	0.63	0.73	0.79	551
315	430	355M/L[2]	3031	7.7	2.3	2.4	15.0	40	88	1970	73	993	94.5	95.5	95.8	0.64	0.74	0.80	572
330	450	355A/B[2]	3179	7.7	1.8	2.1	13.9	31	68	2015	73	992	94.8	95.6	95.8	0.67	0.76	0.80	599
355	480	355A/B[2]	3416	7.7	2.3	2.4	15.9	27	59	2175	73	993	94.6	95.6	95.8	0.65	0.75	0.80	644
Optionals																			
160	220	355M/L	1540	7.7	1.6	2.0	8.34	32	70	1415	73	993	94.3	95.2	95.6	0.67	0.77	0.80	291
185	250	355M/L	1780	7.7	1.9	2.3	9.03	32	70	1475	73	993	94.2	95.2	95.7	0.65	0.75	0.80	336

Note:
(1) Efficiency values are given according to IEC 60034-2-1. They are calculated according to indirect method, with stray load losses determined by measurement.
(2) Motor with class F temperature rise.
(3) 6-pole motors in outputs from 7.5 up to 37 kW are available under request.

Three-phase Electric Induction Motor - High Efficiency - IE2 - 50 Hz [1]

Output		Frame	Full Load Torque (Nm)	Locked Rotor Current Il/In	Locked Rotor Torque Tl/Tn	Break-down Torque Tb/Tn	Inertia J (kgm²)	Allowable locked rotor time (s)		Weight (kg)	Sound dB(A)	415 V							
												Rated speed (rpm)	% of full load						Full load current In (A)
													Efficiency			Power Factor			
kW	HP							Hot	Cold				50	75	100	50	75	100	
II Poles																			
0.37	0.5	71	1.24	6.5	2.2	2.5	0.0004	13	29	10.0	56	2850	64.4	69.0	69.5	0.57	0.71	0.81	0.914
0.55	0.75	71	1.85	6.5	2.5	2.6	0.0005	11	24	11.0	56	2840	70.6	74.1	74.1	0.61	0.75	0.81	1.27
0.75	1	80	2.53	6.5	2.5	2.5	0.0008	17	37	14.0	59	2830	76.6	77.0	77.4	0.66	0.78	0.85	1.59
1.1	1.5	80	3.67	6.5	3.3	3.3	0.0010	13	29	16.0	59	2860	78.0	79.0	79.6	0.58	0.72	0.80	2.40
1.5	2	90S	4.96	6.5	2.4	2.9	0.0020	9	20	20.0	64	2890	80.5	81.0	81.3	0.59	0.71	0.80	3.21
2.2	3	90L	7.32	7.0	3.3	3.4	0.0025	11	24	23.0	64	2870	82.0	82.8	83.2	0.61	0.74	0.81	4.54
3	4	100L	9.83	7.0	2.3	3.3	0.0064	8	18	31.0	67	2915	83.6	84.0	84.6	0.70	0.82	0.88	5.61
3.7	5	100L	12.2	7.0	2.8	3.2	0.0064	13	29	33.0	67	2890	85.5	85.5	85.5	0.73	0.83	0.88	6.84
4	5.5	112M	13.2	7.0	2.6	3.4	0.0088	12	26	41.0	64	2905	84.8	85.0	85.8	0.77	0.85	0.89	7.29
5.5	7.5	132S	17.9	7.0	2.2	3.2	0.0189	10	22	60.0	67	2940	84.0	84.1	87.0	0.72	0.82	0.87	10.1
7.5	10	132S	24.4	7.0	2.3	3.2	0.0252	10	22	68.0	67	2935	87.0	88.1	88.1	0.74	0.84	0.88	13.5
9.2	12.5	L132M	29.9	7.0	2.4	3.3	0.0303	9	20	79.0	67	2937	88.0	88.8	88.8	0.76	0.85	0.89	16.2
11	15	160M	35.6	7.0	2.5	3.5	0.0306	16	35	108	69	2950	88.4	89.4	89.4	0.68	0.79	0.85	20.1
15	20	160M	48.7	7.0	2.7	3.2	0.0444	14	31	137	69	2940	90.3	90.3	90.3	0.75	0.84	0.88	26.3
18.5	25	160L	60.1	7.0	2.9	3.3	0.0555	14	31	153	69	2940	90.9	90.9	90.9	0.79	0.86	0.89	31.8
22	30	180M	71.1	7.0	2.2	3.1	0.1081	13	29	190	70	2955	90.5	91.3	91.3	0.76	0.84	0.86	39.0
30	40	200M/L	96.8	7.0	3.1	3.1	0.1695	18	40	238	74	2960	90.8	92.0	92.0	0.71	0.81	0.86	52.8
37	50	200M/L	119	7.0	3.3	3.3	0.2119	15	33	267	74	2960	91.6	92.5	92.5	0.76	0.84	0.86	64.7
45	60	225S/M	145	7.0	2.4	3.2	0.3396	17	37	342	74	2965	92.2	92.9	92.9	0.73	0.82	0.86	78.4
55	75	250S/M	178	7.0	2.7	3	0.3553	18	40	425	74	2960	92.6	93.2	93.2	0.75	0.83	0.87	94.4
75	100	W280S/M	242	7.0	3	3.1	0.5244	16	35	579	74	2965	93.7	93.8	93.8	0.79	0.85	0.87	128
90	125	W280S/M	291	7.0	2.9	3	0.5583	31	68	624	74	2960	94.1	94.1	94.1	0.80	0.86	0.89	150
110	150	W315S/M	353	7.0	2	2.7	1.24	34	75	815	77	2975	94.3	94.3	94.3	0.82	0.87	0.89	182
125	170	W315S/M	401	7.0	2.2	2.7	1.53	34	75	900	77	2975	94.5	94.5	94.5	0.82	0.87	0.89	207
132	175	W315S/M	424	7.0	2.4	2.9	1.58	26	57	910	77	2975	94.6	94.6	94.6	0.78	0.85	0.89	218
150	200	315S/M	481	7.0	2.2	2.9	1.27	38	84	990	77	2980	94.6	94.7	94.7	0.79	0.86	0.88	250
160	220	315S/M	513	7.0	2.4	3	1.35	37	81	1010	77	2980	94.6	94.8	94.8	0.79	0.80	0.89	264
185	250	315S/M[2]	593	7.0	2.7	3	1.48	26	57	1070	77	2980	95.0	95.0	95.0	0.79	0.86	0.87	311
200	270	315L	641	7.0	2.5	2.8	3.28	34	75	1270	78	2981	95.0	95.0	95.0	0.80	0.85	0.88	333
225	305	315L	721	7.0	2.5	2.6	3.50	33	73	1315	78	2981	95.0	95.0	95.0	0.82	0.88	0.90	366
250	340	315L[2]	802	7.0	2.2	2.5	3.50	23	51	1320	78	2977	95.0	95.0	95.0	0.84	0.88	0.90	407
280	380	315L[2]	898	7.0	2.5	2.8	4.07	25	55	1430	78	2980	95.0	95.0	95.0	0.81	0.88	0.90	456
300	400	315L[2]	962	7.0	2.6	2.8	4.17	20	44	1450	78	2980	95.0	95.0	95.0	0.84	0.88	0.90	488
315	430	355M/L[2]	1008	7.0	2.3	2.6	5.25	28	62	1700	80	2985	95.0	95.0	95.0	0.84	0.88	0.90	513
330	450	355M/L[2]	1057	7.0	2.6	2.8	5.90	31	68	1800	80	2984	95.0	95.0	95.0	0.87	0.90	0.90	537
355	480	355M/L[2]	1137	7.0	2.4	2.5	6.01	26	57	1830	80	2982	95.0	95.0	95.0	0.87	0.90	0.91	571
Optionals																			
5.5	7.5	112M	18.1	7.0	3.0	3.7	0.0094	16	35	45.0	64	2900	87.0	87.0	87.0	0.68	0.79	0.84	10.5
9.2	12.5	160M	29.8	7.0	2.3	3.6	0.0331	16	35	100	69	2950	86.3	88.4	88.8	0.60	0.73	0.81	17.8
200	270	355M/L	640	7.0	1.9	2.7	3.65	50	110	1425	80	2985	94.5	95.0	95.0	0.81	0.86	0.88	333
225	305	355M/L	720	7.0	2.6	2.7	4.52	41	90	1560	80	2984	94.5	95.0	95.0	0.86	0.90	0.91	362
250	340	355M/L	800	7.0	2.4	2.2	4.74	41	90	1603	80	2985	95.0	95.0	95.0	0.85	0.89	0.90	407
280	380	355M/L[2]	897	7.0	2.7	2.7	5.28	26	57	1680	80	2983	95.0	95.0	95.0	0.87	0.90	0.91	451
300	400	355M/L[2]	962	7.0	2.5	2.5	5.28	27	59	1690	80	2981	94.5	95.0	95.0	0.87	0.90	0.91	483

Note:
(1) Efficiency values are given according to IEC 60034-2-1. They are calculated according to indirect method, with stray load losses determined by measurement.
(2) Motor with class F temperature rise.

Three-phase Electric Induction Motor - High Efficiency - IE2 - 50 Hz [1]

Output		Frame	Full Load Torque (Nm)	Locked Rotor Current Il/In	Locked Rotor Torque Tl/Tn	Break-down Torque Tb/Tn	Inertia J (kgm²)	Allowable locked rotor time (s)		Weight (kg)	Sound dB(A)	415 V							
												Rated speed (rpm)	% of full load						Full load current In (A)
													Efficiency			Power Factor			
kW	HP							Hot	Cold				50	75	100	50	75	100	
IV Poles																			
0.25	0.33	71	1.69	5.5	2.3	2.7	0.0007	35	77	10.0	43	1415	60.4	66.8	68.5	0.42	0.55	0.68	0.747
0.37	0.5	71	2.53	6.0	2.5	2.5	0.0008	35	77	11.0	43	1395	68.9	72.0	72.7	0.45	0.61	0.71	0.997
0.55	0.75	80	3.64	6.0	2.5	3.3	0.0032	15	33	16.0	44	1445	72.0	76.2	77.1	0.46	0.60	0.70	1.42
0.75	1	80	5.03	6.0	2.8	3	0.0032	16	35	16.0	44	1425	78.4	79.0	79.6	0.54	0.69	0.79	1.66
1.1	1.5	90S	7.27	6.0	2.3	2.7	0.0049	13	29	20.0	49	1445	80.5	81.0	81.4	0.58	0.70	0.78	2.41
1.5	2	90L	9.92	6.0	2.8	3	0.0063	12	26	23.0	49	1445	80.2	82.0	82.8	0.53	0.67	0.78	3.23
2.2	3	100L	14.6	7.0	2.8	2.8	0.0097	11	24	32.0	53	1440	83.3	84.3	84.3	0.56	0.70	0.78	4.65
3	4	L100L	20.0	7.0	3.9	3.2	0.0120	14	31	37.0	53	1435	84.5	85.0	85.5	0.61	0.74	0.81	6.03
3.7	5	112M	24.3	7.0	2.8	3.3	0.0156	17	37	42.0	56	1455	85.5	86.3	86.3	0.58	0.69	0.77	7.75
4	5.5	112M	26.3	7.0	3.2	3.6	0.0167	15	33	44.0	56	1455	84.6	86.0	86.6	0.49	0.63	0.75	8.57
5.5	7.5	132S	35.9	7.0	1.9	3.1	0.0528	8	18	66.0	56	1465	86.5	87.0	87.7	0.65	0.78	0.82	10.6
7.5	10	132M	49.1	7.0	2.2	2.9	0.0643	14	31	77.0	56	1460	87.5	88.0	88.7	0.76	0.82	0.85	13.8
9.2	12.5	132M/L	60.0	7.0	2.4	3.2	0.0788	12	26	86.0	56	1465	88.5	89.0	89.3	0.70	0.80	0.83	17.3
11	15	160M	71.3	7.0	2.5	3	0.0682	13	29	118	64	1475	88.6	89.8	89.8	0.64	0.76	0.82	20.8
15	20	160L	97.2	7.0	2.8	3.1	0.0974	12	26	150	64	1475	89.4	90.6	90.6	0.68	0.79	0.84	27.4
18.5	25	180M	120	7.0	3.2	3.4	0.1653	16	35	172	64	1475	89.6	91.2	91.2	0.63	0.75	0.81	34.8
22	30	180L	143	7.0	3.3	3.5	0.2001	14	31	200	64	1475	90.7	91.6	91.6	0.67	0.78	0.83	40.3
30	40	200M/L	194	7.0	2.9	3.2	0.3074	15	33	248	70	1475	91.9	92.3	92.3	0.71	0.80	0.85	53.2
37	50	225S/M	239	7.0	2.7	3.2	0.6107	21	46	319	70	1480	91.7	92.7	92.7	0.64	0.75	0.82	67.7
45	60	225S/M	291	7.0	2.7	3	0.6786	20	44	333	70	1480	92.4	93.1	93.1	0.68	0.78	0.83	81.0
55	75	250S/M	354	7.0	2.6	3	0.7081	17	37	418	70	1485	93.4	93.5	93.5	0.68	0.78	0.83	98.6
75	100	W280S/M	484	7.0	2.7	2.8	1.08	18	40	575	70	1480	94.0	94.0	94.0	0.73	0.81	0.84	132
90	125	W280S/M	580	7.0	3.1	3.1	1.08	28	62	605	70	1483	94.2	94.2	94.2	0.68	0.78	0.83	160
110	150	W315S/M	707	7.0	2.6	2.9	2.33	22	48	830	71	1487	94.5	94.5	94.5	0.71	0.80	0.83	195
125	170	W315S/M	803	7.0	2.7	2.9	2.78	20	44	905	71	1487	94.7	94.7	94.7	0.71	0.80	0.83	221
132	175	W315S/M	848	7.0	2.7	2.8	3.01	21	46	910	71	1487	94.7	94.7	94.7	0.71	0.80	0.83	234
150	200	315S/M	961	7.0	2.9	3.1	2.31	30	66	1000	71	1491	94.9	94.9	94.9	0.65	0.77	0.81	271
160	220	315S/M	1025	7.0	2.9	3	2.47	29	64	1030	71	1491	94.3	94.9	94.9	0.68	0.78	0.83	283
185	250	315S/M	1186	7.0	3	3	2.94	26	57	1120	71	1491	94.9	95.1	95.1	0.67	0.78	0.80	338
200	270	315L	1283	7.0	2.9	2.9	4.53	28	62	1220	74	1490	95.1	95.1	95.1	0.73	0.80	0.85	344
225	305	315L	1443	7.0	2.8	2.8	5.42	29	64	1325	74	1490	95.1	95.1	95.1	0.74	0.81	0.85	387
250	340	315L	1602	7.0	3	3	6.39	27	59	1450	74	1491	95.1	95.1	95.1	0.73	0.81	0.85	430
280	380	315L[2]	1796	7.0	3	3	6.38	20	44	1460	74	1490	95.1	95.1	95.1	0.72	0.80	0.85	482
300	400	315L[2]	1925	7.0	2.9	2.7	6.49	22	48	1470	74	1489	95.1	95.1	95.1	0.73	0.80	0.85	516
315	430	355M/L	2017	7.0	2.5	2.7	9.47	28	62	1730	76	1492	95.1	95.1	95.1	0.68	0.78	0.85	542
330	450	355M/L	2115	7.0	2.7	2.7	10.4	26	57	1820	76	1491	95.1	95.1	95.1	0.71	0.80	0.83	582
355	480	355M/L[2]	2275	7.0	2.3	2.6	10.4	19	42	1840	76	1491	95.0	95.1	95.1	0.73	0.81	0.85	611
Optionals																			
9.2	12.5	160M	59.6	7.0	2.2	3.1	0.0839	15	33	110	64	1475	87.5	88.9	89.3	0.63	0.75	0.82	17.5
225	305	355M/L	1441	7.0	2.7	2.8	6.84	23	51	1450	76	1492	94.6	95.1	95.1	0.71	0.80	0.85	387
250	340	355M/L	1602	7.0	2.3	2.5	7.55	28	62	1525	76	1491	94.8	95.1	95.1	0.75	0.82	0.86	425
280	380	355M/L	1794	7.0	2.4	2.7	8.05	28	62	1590	76	1491	95.0	95.1	95.1	0.66	0.77	0.80	512
300	400	355M/L	1921	7.0	2.6	2.9	8.75	24	53	1660	76	1492	94.4	95.1	95.1	0.69	0.78	0.83	529

Note:
(1) Efficiency values are given according to IEC 60034-2-1. They are calculated according to indirect method, with stray load losses determined by measurement.
(2) Motor with class F temperature rise.

Three-phase Electric Induction Motor - High Efficiency - IE2 - 50 Hz [1]

Output		Frame	Full Load Torque (Nm)	Locked Rotor Current Il/In	Locked Rotor Torque Tl/Tn	Break-down Torque Tb/Tn	Inertia J (kgm²)	Allowable locked rotor time (s)		Weight (kg)	Sound dB(A)	415 V							
												Rated speed (rpm)	% of full load						Full load current In (A)
													Efficiency			Power Factor			
kW	HP							Hot	Cold				50	75	100	50	75	100	
VI Poles																			
0.18	0.25	71	1.86	6.0	2.0	1.8	0.0009	50	110	12.0	43	925	44.0	51.3	56.6	0.39	0.49	0.57	0.776
0.25	0.33	71	2.62	6.0	2.4	1.9	0.0009	50	110	12.0	43	910	54.2	60.0	61.6	0.37	0.47	0.56	1.01
0.37	0.5	80	3.76	6.0	2.6	2.6	0.0025	20	44	15.0	43	940	59.0	65.7	67.6	0.43	0.56	0.67	1.14
0.55	0.75	80	5.65	6.0	2.6	2.3	0.0034	21	46	17.0	43	930	69.5	72.0	73.1	0.47	0.61	0.74	1.41
0.75	1	L90S	7.62	6.0	2.3	2.4	0.0060	27	59	23.0	45	940	74.5	75.0	75.9	0.51	0.65	0.72	1.91
1.1	1.5	L90L[2]	11.2	6.0	2.7	2.7	0.0079	20	44	26.0	45	935	76.9	78.0	78.1	0.49	0.62	0.70	2.80
1.5	2	100L	14.9	6.0	2.5	2.8	0.0143	18	40	32.0	44	960	76.2	79.0	79.8	0.47	0.60	0.70	3.74
2.2	3	112M	22.0	7.0	2.7	2.7	0.0202	18	40	40.0	49	955	79.4	81.0	81.8	0.47	0.60	0.71	5.27
3	4	132S	29.6	7.0	2.3	2.6	0.0416	19	42	59.0	53	970	81.3	83.0	83.3	0.46	0.59	0.71	7.06
3.7	5	132S	36.4	7.0	2.2	2.3	0.0568	18	40	68.0	53	970	82.2	84.0	84.3	0.56	0.67	0.75	8.14
4	5.5	132M	39.2	7.0	2.6	2.7	0.0568	18	40	70.0	53	975	83.2	84.0	84.6	0.48	0.61	0.71	9.26
5.5	7.5	132M/L	53.9	7.0	3.1	3.2	0.0681	25	55	79.0	53	975	84.0	85.0	86.0	0.46	0.59	0.71	12.5
45	60	280S/M	436	7.0	2	2.6	2.70	26	57	540	65	987	92.7	92.7	92.7	0.64	0.74	0.79	85.5
55	75	280S/M	532	7.0	2.2	2.8	2.81	15	33	590	65	988	93.1	93.1	93.1	0.63	0.74	0.79	104
75	100	315S/M	722	7.0	2	2.8	2.24	29	64	840	67	992	93.0	93.7	93.7	0.63	0.74	0.80	139
90	125	315S/M	868	7.0	2.1	2.6	2.66	33	73	900	67	991	94.0	94.0	94.0	0.60	0.71	0.80	167
110	150	315S/M	1060	7.0	2.4	2.8	3.33	28	62	985	67	992	94.3	94.3	94.3	0.62	0.74	0.80	203
125	170	315S/M	1203	7.0	2.5	3	4.02	26	57	1065	67	993	94.5	94.5	94.5	0.65	0.75	0.80	230
132	175	315S/M	1270	7.0	2.7	3	4.14	24	53	1100	67	993	94.6	94.6	94.6	0.64	0.75	0.80	243
150	200	315L[2]	1446	7.0	2.4	2.7	7.41	17	37	1340	68	991	92.2	94.1	94.7	0.61	0.72	0.78	283
160	220	315L[2]	1543	7.0	2.5	2.4	6.89	18	40	1160	68	991	94.0	94.8	94.8	0.63	0.74	0.80	294
185	250	315L[2]	1784	7.0	2.6	2.7	7.96	16	35	1240	68	991	94.0	94.9	94.9	0.62	0.74	0.80	339
200	270	315L[2]	1926	7.0	2.7	2.8	9.76	19	42	1380	68	992	94.8	95.0	95.0	0.65	0.76	0.80	366
225	305	315L[2]	2169	7.0	2.7	2.8	10.3	16	35	1420	68	991	94.5	95.0	95.0	0.65	0.75	0.80	412
250	340	355M/L	2403	7.0	2.1	2.5	12.7	46	101	1770	73	994	94.5	95.0	95.0	0.62	0.73	0.80	458
280	380	355M/L	2689	7.0	2.7	3	13.9	33	73	1865	73	995	93.5	95.0	95.0	0.57	0.68	0.75	547
300	400	355M/L	2884	7.0	2.4	2.7	14.6	38	84	1920	73	994	94.0	95.0	95.0	0.63	0.73	0.79	556
315	430	355M/L	3031	7.0	2.3	2.5	15.0	40	88	1960	73	993	94.5	95.0	95.0	0.63	0.75	0.80	577
330	450	355A/B[2]	3179	7.0	1.8	2.1	13.9	31	68	2015	73	992	94.8	95.0	95.0	0.67	0.76	0.80	604
355	480	355A/B[2]	3419	7.0	1.9	2	15.5	31	68	2145	73	992	94.9	95.0	95.0	0.71	0.79	0.80	650
Optionals																			
160	220	355M/L	1540	7.0	1.9	2.3	6.95	44	97	1310	73	993	93.5	94.7	94.8	0.60	0.71	0.78	301
185	250	355M/L	1780	7.0	1.7	2.1	8.34	45	99	1420	73	993	94.1	94.9	94.9	0.64	0.74	0.80	339
200	270	355M/L	1923	7.0	2	2.4	9.96	41	90	1545	73	994	94.0	95.0	95.0	0.61	0.72	0.80	366
225	305	355M/L	2165	7.0	2	2.4	10.4	40	88	1585	73	993	94.3	95.0	95.0	0.62	0.73	0.80	412

Note:
(1) Efficiency values are given according to IEC 60034-2-1. They are calculated according to indirect method, with stray load losses determined by measurement.
(2) Motor with class F temperature rise.
(3) 6-pole motors in outputs from 7.5 up to 37 kW are available under request.

Mechanical Data

Foot Mounted Motors, Terminal Box Top

Frames 71 to 132M/L

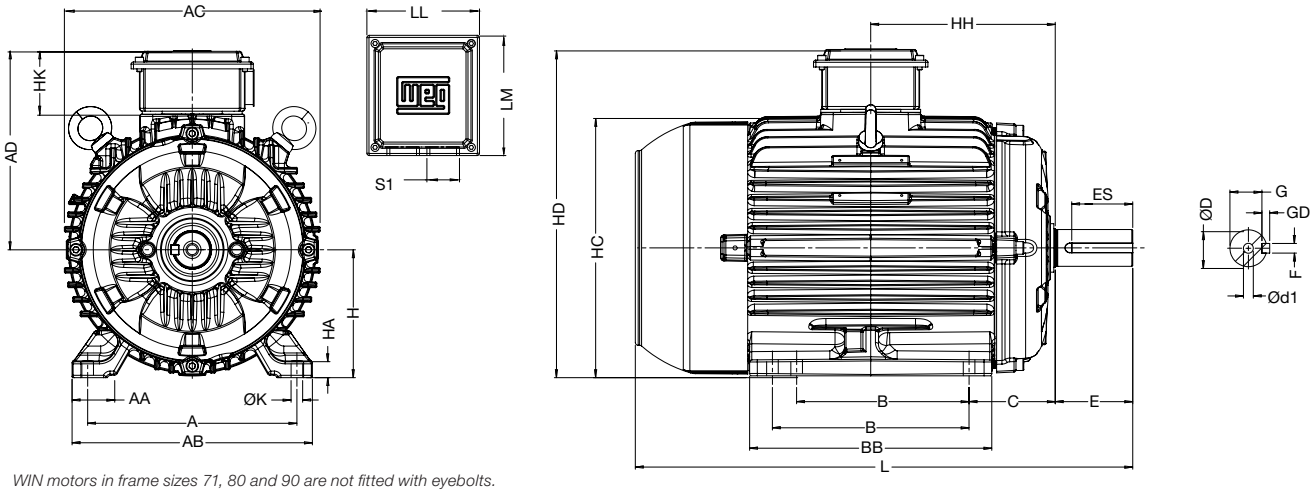

WIN motors in frame sizes 71, 80 and 90 are not fitted with eyebolts.
WIN motors in frame size 100 have the eyebolts positined sidewards.

Frames 160M to W280S/M

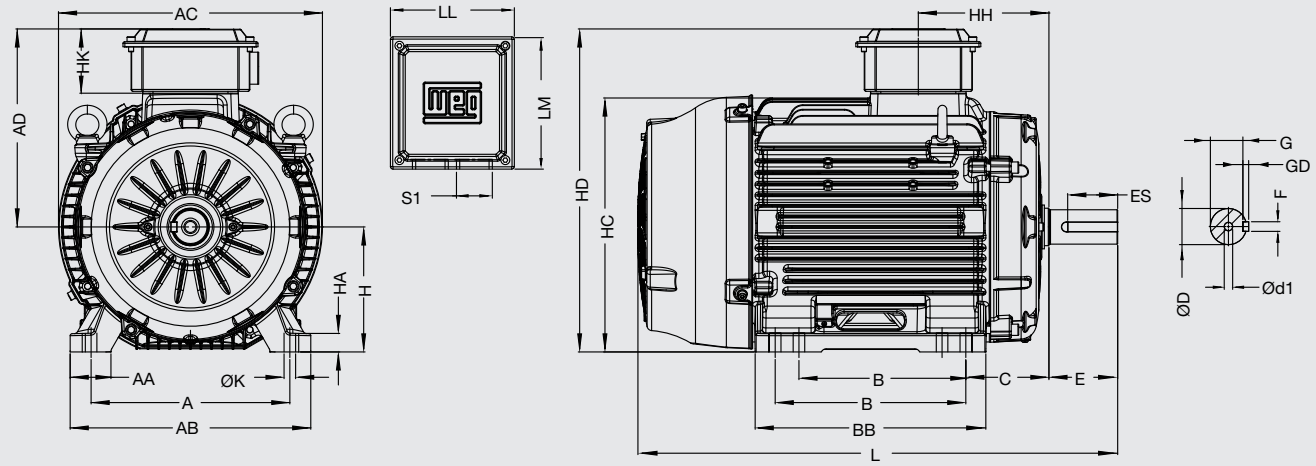

Frames 280S/M to 355A/B

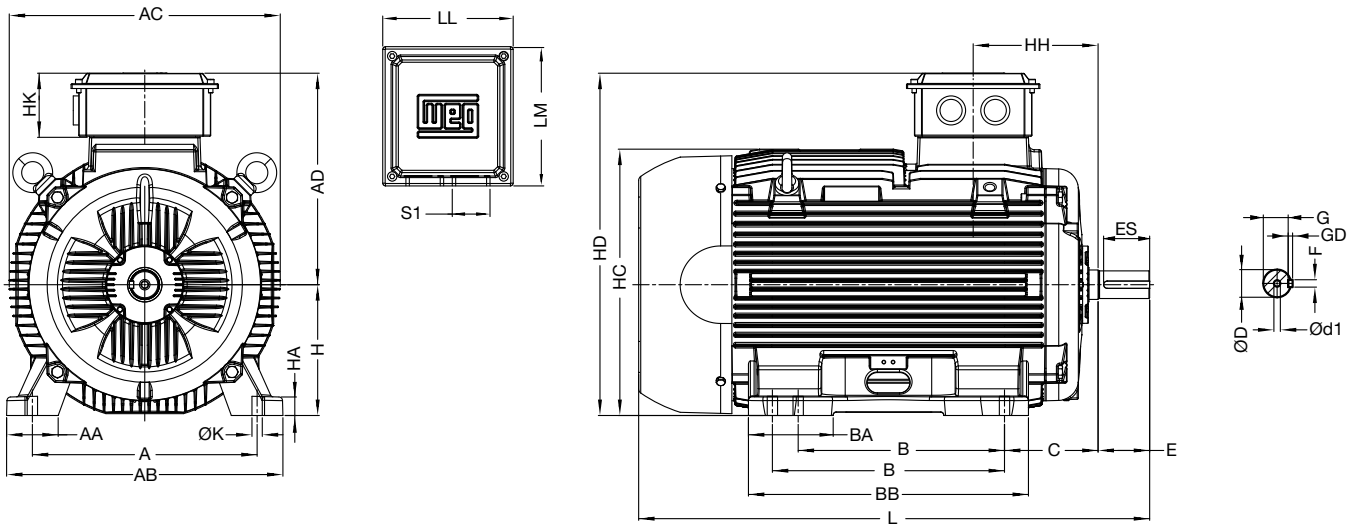

Frame	Feet										Frame				
	A	AA	AB	B	BA	BB	C	H	HA	K	AC	AD	HC	HD	L
71	112	29	132	90		114	45	71	7	7	141	130.5	144.5	201	250
80	125	31	149	100		126	50	80	8	10	159	139.5	163	219.5	277
L80															302
90S	140	37	164			131	56	90	9		179	149.5	182	239.5	305
L90S															334.5
90L				125		156									330
L90L															359.5
100L	160	40	188	140		173	63	100	10	12	210	159.5	205	259.5	376
L100L															414
112M	190		220		-	177	70	112			226	177.5	225.5	289.5	394
L112M															429
132S	216	46	248			187	89	132	16		272	205.5	272	337.5	450.5
L132S															475.5
132M				178		225									489
L132M															514
132M/L				178 / 203		250									513.5
160M	254	36	292	210		246	108	160	17	15	358	259	335	419	621
160L				254		290									665
180M	279	51	329	241		288	121	180	19		389	275	371	455	684.5
180L				279		325									722.5
200M/L	318	65	385	267 / 305	106	369	133	200	30	19	414	317	414	517	767.5
225S/M*	356	80	436	286 / 311	100	395	149	225	28		488	357.8	469	583	856.5
225S/M															886.5
250S/M*	406	100	506	311 / 349	135	447	168	250	30	24	528	377.8	514	628	965.5
250S/M															
W280S/M*	457		557	368 / 419	143	509	190	280	30				544	658	994
W280S/M															
280S/M*					151	517			42		599	433.8	600	714	1059.5
280S/M															
W315S/M*	508	120	630	406 / 457	168	561	216	315	35	28			635	749	1110
W315S/M															1140
315S/M*					184	626			48		657	514	665	829	1183.5
315S/M															1213.5
315L*				508	221	759						524		839	1293.5
315L															1323.5
355M/L*	610	140	750	560 / 630	237.5	775	254	355	50		736	574	755	929	1404
355M/L															1474
355A/B*				710 / 800	332	965				28					1599
355A/B															1669

Frame	Terminal box					Shaft							Bearings	
	HH	HK	LL	LM	S1	E	ES	D	D1	F	G	GD	DE	NDE
71	90	59.5	103.5	104	M24x1.5	30	18	14j6	DM5	5	11	5	6202 ZZ	6202 ZZ
80	100					40	28	19j6	DM6	6	15.5	6	6204 ZZ	6203 ZZ
L80														
90S	106					50	36	24j6	DM8	8	20	7	6205 ZZ	6204 ZZ
L90S														
90L	118.5													
L90L														
100L	133					60	45	28j6	DM10		24		6206 ZZ	6205 ZZ
L100L														
112M	140	65.5	118	126	2xM30x2								6207 ZZ	6206 ZZ
L112M														
132S	159					80	63	38k6	DM12	10	33	8	6208 ZZ	6207 ZZ
L132S														
132M	178													
L132M														
132M/L	190.5													
160M	213	84	160	168	2xM36x2	110	80	42k6	DM16	12	37		6209 ZZ C3	6209 ZZ C3
160L	187													
180M	241.5							48k6		14	42.5	9	6211 ZZ C3	
180L	212.5													
200M/L	209	103	200	216	2xM48x2			55m6		16	49	10	6212 ZZ C3	
225S/M*	203.5	114	224	248	2xM64x2		100						6214 C3	6212 C3
225S/M						140	125	60m6		18	53	11		
250S/M*	217													
250S/M								65m6			58			
W280S/M*	245.5												6314 C3	
W280S/M								75m6		20	67.5	12	6316 C3	
280S/M*	265.5							65m6	DM20	18	58	11	6314 C3	6314 C3
280S/M								75m6		20	67.5	12	6316 C3	
W315S/M*	265							65m6		18	58	11	6314 C3	
W315S/M						170	160	80m6		22	71	14	6319 C3	
315S/M*	263.5	164	310	342		140	125	65m6		18	58	11	6314 C3	
315S/M						170	160	80m6		22	71	14	6319 C3	6316 C3
315L*	285.5	174	362	400		140	125	65m6		18	58	11	6314 C3	6314 C3
315L						170	160	80m6		22	71	14	6319 C3	6316 C3
355M/L*	339				2xM72x2	140	125	75m6		20	67.5	12	6316 C3	6314 C3
355M/L						210	200	100m6	DM24	28	90	16	6322 C3	6319 C3
355A/B*						140	125	75m6	DM20	20	67.5	12	6316 C3	6314 C3
355A/B						210	200	100m6	DM24	28	90	16	6322 C3	6319 C3

Notes:
(*) Dimension applicable to 2 pole motors.
(**) All dimensions are in mm.

"FF" Flange

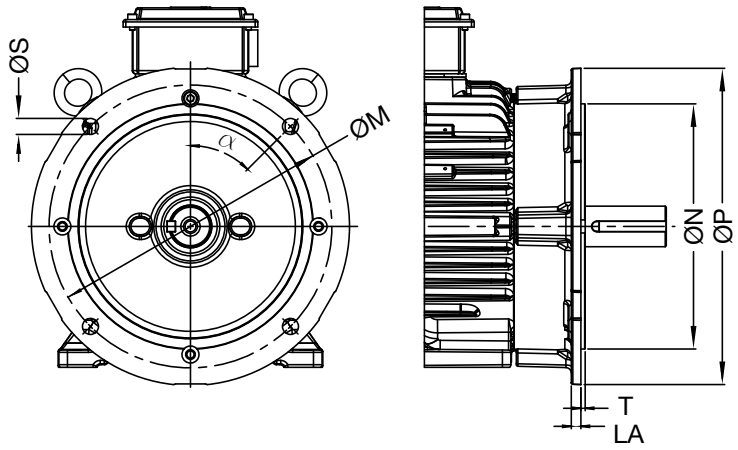

Frame	Flange		LA	M	N	P	N° of holes	S	T	α
	DIN EN 50347	DIN 42948								
71	FF-130	A-160	9	130	110	160	4	10	3.5	45°
80	FF-165	A-200	10	165	130	200		12		
90S										
L90S										
90L										
L90L										
100L	FF-215	A-250	12.5	215	180	250		15	4	
L100L										
112M										
L112M										
132S	FF-265	A-300	12	265	230	300				
L132S										
132M										
L132M										
132M/L										
160M	FF-300	A-350	16	300	250	348		19	5	
160L										
180M										
180L										
200M/L	FF-350	A-400	18	350	300	398				
225S/M	FF-400	A 450		400	350	448	8			22.5°
250S/M	FF-500	A-550	20	500	450	548				
W280S/M										
280S/M			22							
W315S/M	FF-600	A-660		600	550	660		24	6	
315S/M										
315L										
355M/L	FF-740	A-800		740	680	800 / 880				
355A/B										

Notes:
(*) All dimensions are in mm.

"C-DIN" Flange

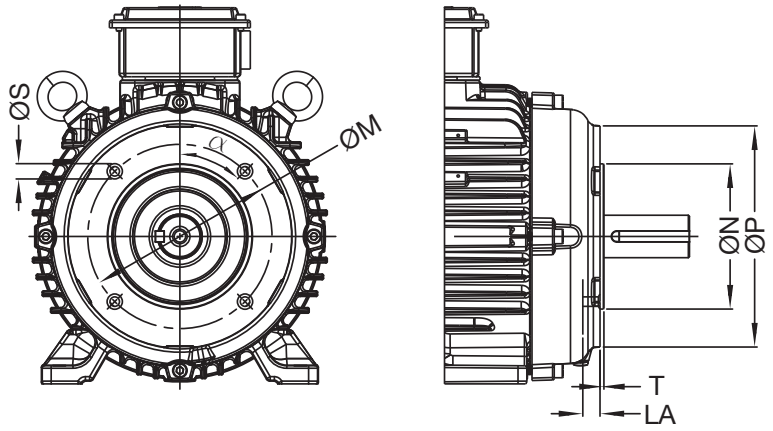

Frame	Flange		LA	M	N	P	S	T	α	N° of holes
	DIN EN 50347	DIN 42948								
71	FT-85	C-105	8	85	70	105	M6	2.5	45°	4
80	FT-100	C-120	10.5	100	80	120		3		
L80										
90S	FT-115	C-140	15	115	95	140	M8			
L90S										
90L										
L90L										
100L	FT-130	C-160	12	130	110	160		3.5		
L100L										
112M										
L112M										
132S	FT-165	C-200	15.5	165	130	200	M10			
L132S										
132M										
L132M										
132M/L										

Notes:
(*) All dimensions are in mm.

Drip Cover

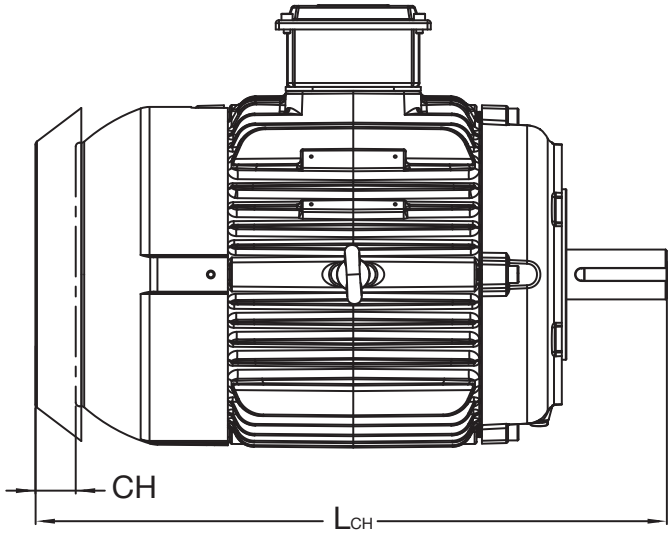

Frame	LCH	CH
71	268.5	18.5
80	295.5	
L80	320.5	
90S	323.5	
L90S	253	
90L	348.5	
L90L	378	
100L	406.5	
L100L	444.5	
112M	428.5	34.5
L112M	463.5	
132S	485	
L132S	510	
132M	523.5	
L132M	548.5	
132M/L	548	
160M	679	58.5
160L	723.5	
180M	743	
180L	781	

Frame	LCH	CH
200M/L	844	76.5
225S/M*	933	
225S/M	963	
250S/M	1042	
W280S/M	1070.5	
280S/M	1154	94.5
W315S/M*	1204.5	
W315S/M	1234.5	
315S/M*	1278	
315S/M	1308	
315L*	1388	
315L	1418	
355M/L*	1499	95
355M/L	1569	
355A/B*	1694	
355A/B	1764	

Notes:
(*) Dimension applicable to 2 pole motors.
(**) All dimensions are in mm.

Components Design





Terminal Box
- Space available for accessories leads connectors.
- Bulk Moulding Compound terminal block (BMC).



DE (Drive Endshield)
- Cooling fins for improved heat dissipation.
- Reduced bearing operating temperature.
- Reinforced endshield structure.

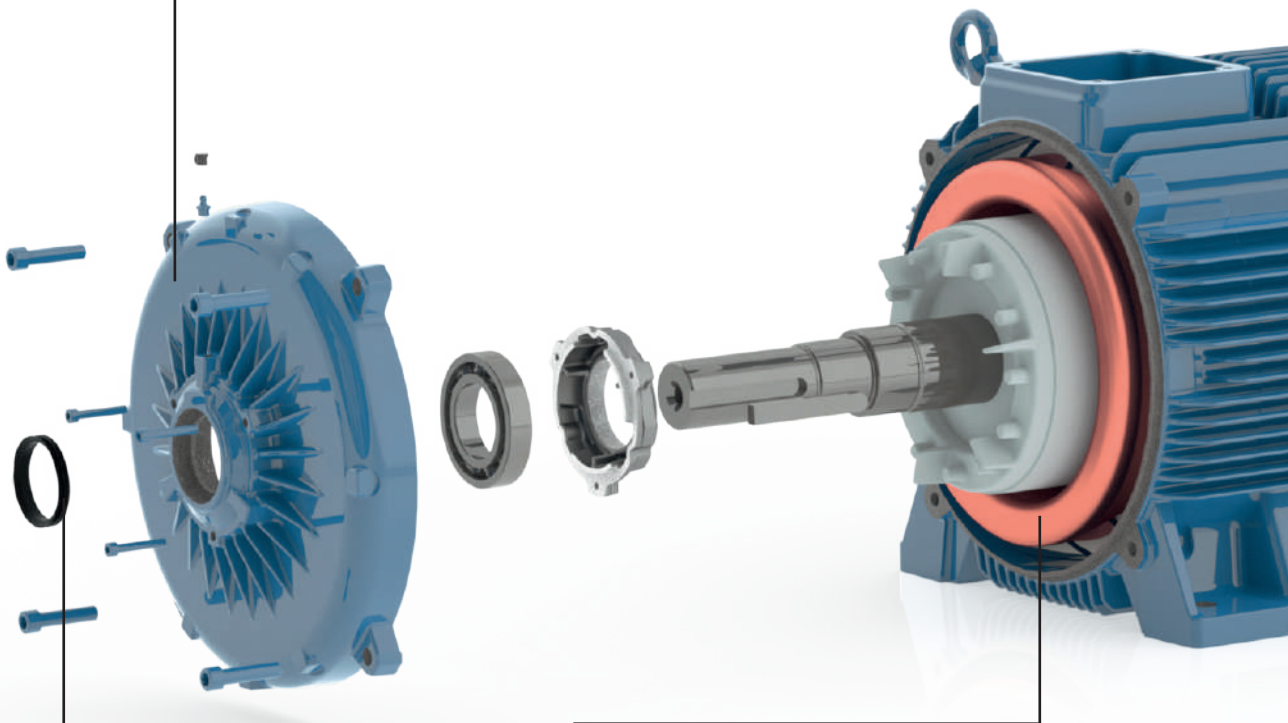

Sealing System
- Increased dust and moisture protection.
- V-Ring sealing as standard feature.

WEG Insulation System Evolution (WISE®)

WEG Insulation System Evolution (WISE®) allows all WIN motors to operate with frequency inverter, as this enamelling process ensures the coils protection against peaks and voltage variations that occur continuously in this type of operation.

Frame

The WIN frame is manufactured in FC-200 cast iron to provide high levels of mechanical strength to cater for the most critical applications.

Vibration Monitoring

- Flat areas at both ends for placement of accelerometers.

(frames 280 S/M to 355 A/B)

Eyebolts

- Safer and easier handling.
- High mechanical resistance.

Solid Feet

- Higher resistance to impacts.
- Suitable for applications with high vibration.
- Easier installation and aligment.

Cooling System

Fan Cover

- Aerodynamic concept .
- Easier assembly.
- Better air flow distribution over frame.
- Provisions for canopy.

Fan

- Reinforced fan hub structure.
- Noise level reduction.
- Increased air flow.

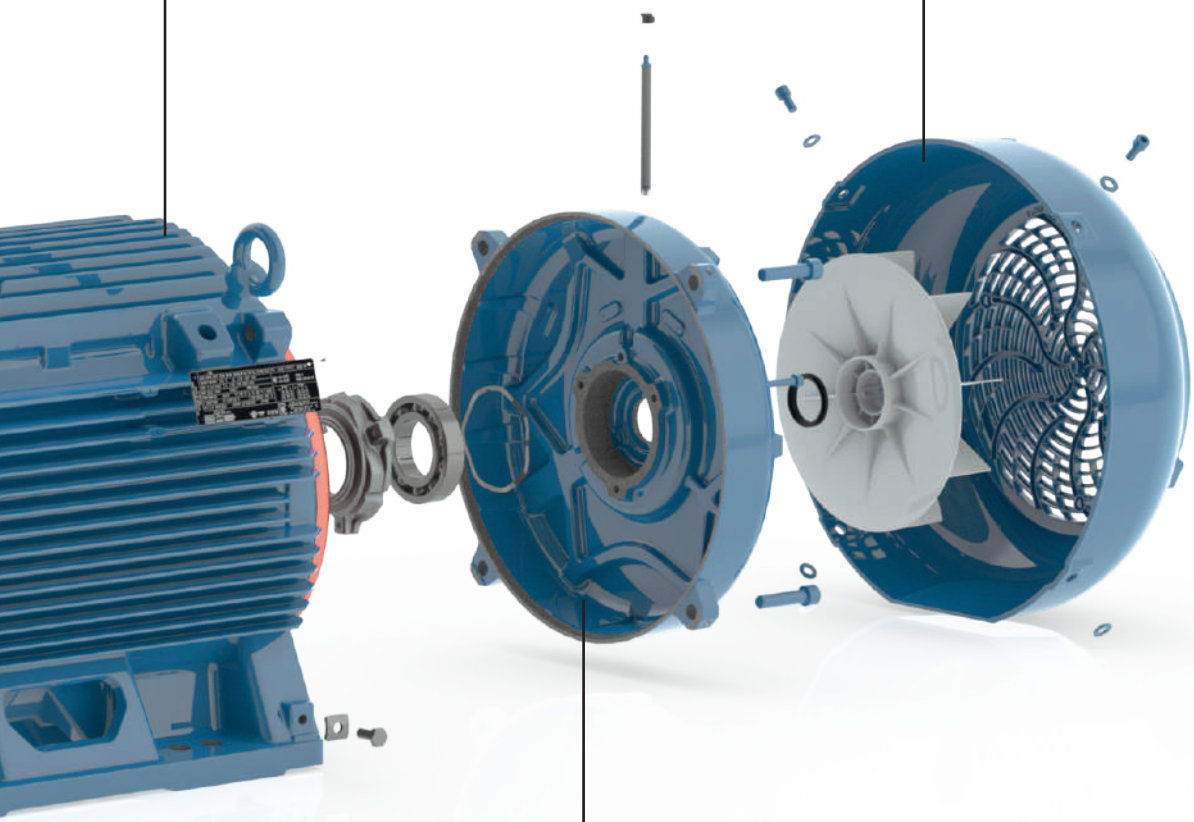

NDE (Non-Drive Endshield)

- Insulated NDE endshield for frames 315S/M to 355A/B to avoid detrimental currents on the bearing, allowing the VFD operation.
- Designed with smooth surface to improve airflow.
- Noise level reduction.
- Structure stiffening to avoid machining deformation.

The scope of WEG Group solutions is not limited to the products and solutions presented in this brochure.
To know our portfolio, contact us.

For WEG's worldwide operations visit our website

www.weg.net

+91 80 46437450

info-in@weg.net

Bengaluru - Karnataka - India

Cod: 50116354 | Rev: 04 | Date (m/y): 05/2025.

The values shown are subject to change without prior notice.
The information contained is reference values.