Fuji Electric

Innovating Energy Technology

7.2 kV Medium Voltage Switchgear



VC-V6A(VCB)
VC-VS6A(VCS)

Comply with IEC62271-200

07A1-E-0016

Printed on recycled paper

Fuji Electric Co., Ltd.
Gate City Ohsaki, East Tower, 11-2, Osaki 1-chome, Shinagawa-ku, Tokyo 141-0032, Japan
Phone : (03)5435-7111

Internet address : http://www.fujielectric.co.jp

Information in this catalog is subject to change without notice.

2015-5(E2015/D2015)ODP1FOLS Printed in Japan

The VC-V6A and VC-VS6A conforms to IEC 62271 -200 standard and is designed and manufactured utilizing Fuji Electric state-of -the-art technology.

7.2 kV Medium Voltage Switchgear

Feature

VC-V6A,VC-VS6A Comply with Relevant IEC Standards and are Third Party Tested

- IEC 62271-1 Common specifications
- IEC 62271-200 Metal-enclosed switchgear
- IEC 62271-100 Circuit-breakers
- IEC 62271-102 Earthing switch
- IEC 62271-106 Contactors



Easy Maintenance and Installation

- VCB and VCS does not need to applied a lifter at withdraw out of switchgear
- Separate protection and control on top of VCB and VCS compartment
- Test terminal located on the front of LV panel
- Easy access for the main-cable termination

Safety Feature

- Loss of service continuity: LSC2B
- Partition class: PM
- Internal arc classification: AFLR
- Automatic metallic shutters
- VCB and VCS interlocked with compartment door
- Rear cover interlocked with earthing switch
- Exhaust duct with optional extension pieces

Components

- VCB is compatible with NE type of Fuji Electric
- Accomodate cast-resin, ring-type CTs for VCB and wound-type CTs for VCS
- The voltage transformer for busbar is draw-out type and can be performed maintenance easily and safety

VC-V6A | VCB

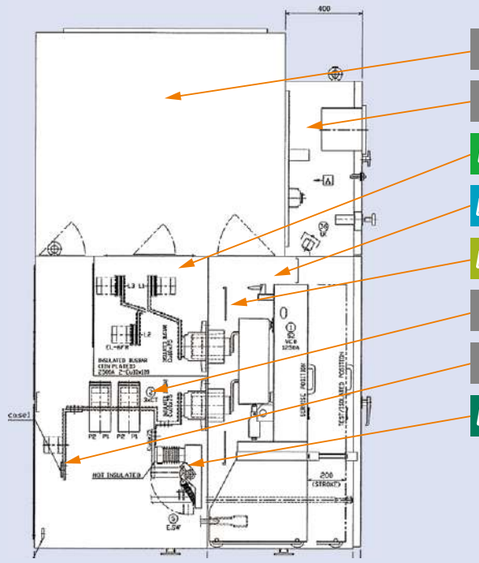

- Exhaust duct (Option)
- Low-voltage compartment
- 01 Busbar compartment
- 05 Circuit breaker compartment
- 02 Automatic shutters
- Current transformers
- Cable compartment
- 03 Earthing switch

VC-VS6A | VCS

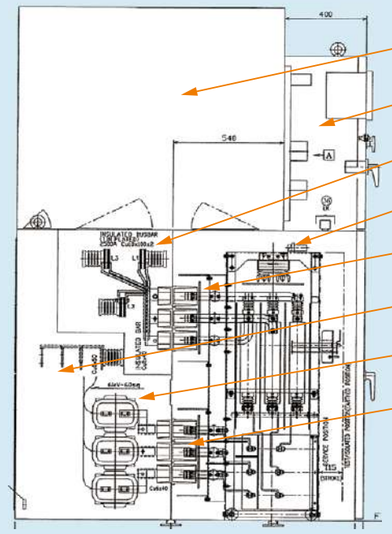

- Exhaust duct (Option)
- Low-voltage compartment
- 01 Busbar compartment
- 02 Contactor compartment
- 03 Automatic shutters
- Cable compartment
- Current transformers
- 04 Automatic earthing switch (Motor feeder only)
- 05 VCS compartment

01 Busbar Compartment

Busbar up to 2,500 A normal current 31.5/40 kA short circuit current

Copper busbar, air insulated, epoxy coated

31.5 kA is arc fault withstand



02 Automatic Shutters

- ▶ Individually operated
- ▶ Earthed metal
- ▶ Can be padlock in closed position



VC-V6A (VCB) VC-VS6A (VCS)



03 Earthing Switch

- ▶ Operated from front of switchgear
- ▶ 'Closed/Open' status visible from front circuit breaker window
- ▶ Mechanical interlock option with the cable compartment door



04 Automatic Earthing Switch

Mechanical interlock with the circuit breaker compartment such that:

- ▶ Earth switch cannot be 'Closed' with the circuit breaker in the 'Service' position
- ▶ Circuit breaker can only be moved from 'Test-Disconnected' to 'Service' position when earthing switch is 'Open'



05 Circuit Breaker/Vacuum Contactors Compartment

Circuit breaker racking mechanism

- ▶ Manual circuit breaker/contactor truck racking mechanism
- ▶ Safety interlocks
- ▶ Compartment door is mechanically interlocked with the circuit breaker/contactor truck such that door can only be opened with the truck is in the 'Test-Disconnected' position
- ▶ Breaker secondary contact interlocked with the breaker and can only be removed in the test position
- ▶ Viewing window provides visual indication of the position of the circuit breaker/contactor truck





Electrical Ratings/Dimensions

Type			VC-V6A	VC-VS6A
Applied standard			IEC 62271-200	
Rated voltage			7.2 kV	
Rated frequency			50 Hz, 60 Hz	
Busbar rated current			630 A, 1250 A, 2000 A, 2500 A	
Load side rated current			630 A, 1250 A, 2000 A	200 A, 400 A
Rated short time withstand current			31.5 kA 3s, 40 kA 3s	
Internal arc classification (IAC)			AFLR 31.5 kA 1 sec	
Rated power-frequency withstand voltage			20 kV 1 min	
Rated lightning impulse withstand voltage			60 kV	
Loss of service continuity category			LSC2B-PM	
Dimensions	Height		2400 mm*1	
	Depth		1700 mm	
	Width	630/1250 A	630 mm	400 mm
		2000 A	750 mm	
		2500 A	900 mm	

*1: Exhaust duct dimensions are excluded

●VC-V6A | VCB

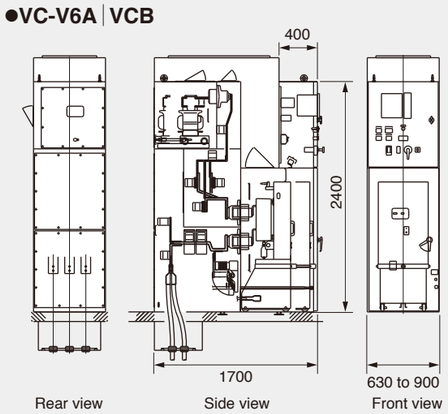

●VC-VS6A | VCS

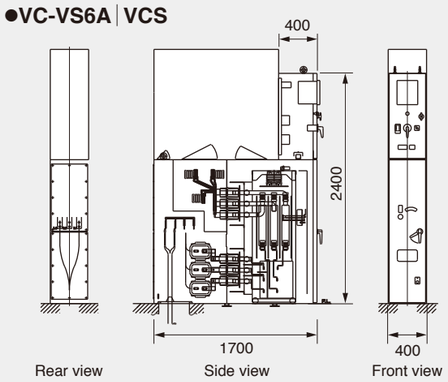

[Unit: mm]

Single Line Diagram

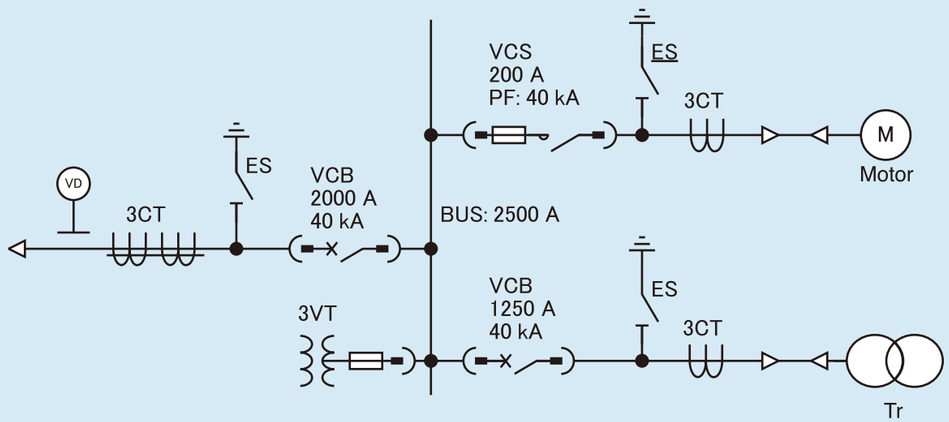

Type Testing

Type testing on the VC-V6A(VCB), VC-VS6A(VCS) was performed based on the international standard IEC62271-200, and the main typing tests performed are as follows.

Dielectric Tests

This test verified that the main circuit can withstand the applied voltage when the standard rated lighting impulse withstand voltage and power-frequency withstand voltage are applied.

Temperature Rise Test

The temperature rise of the various parts of the switchgear or auxiliary equipment for which limits are specified, shall not exceed the values specified in IEC62271-1.

Short Time and Peak Withstand Current Test

Main circuits and, where applicable, the earthing circuits of the switchgear and controlgear shall be subjected to a test to prove their ability to carry the rated peak withstand current and the rated short-time withstand current.

Internal Arc Test

The internal arc test is intended to verify the effectiveness of the design in protecting persons in case of an internal arc, when the switchgear and controlgear is in normal service condition. The internal arc test is only applicable to metal-enclosed switchgear and controlgear, intended to be qualified as IAC classified.

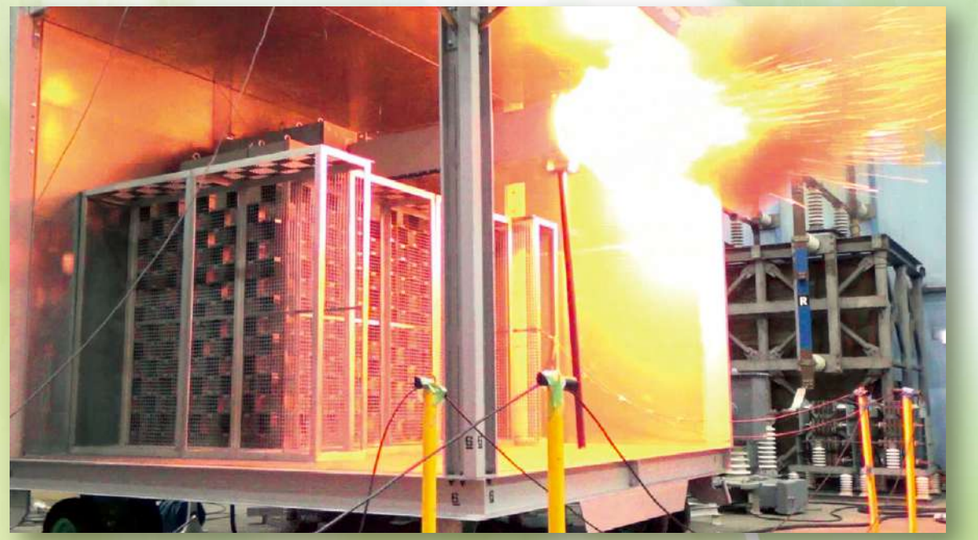

Internal arc test