Single-beam Safety Sensor

E3ZS

CSM_E3ZS_DS_E_4_1

Detects Intrusions into Hazardous Areas with a Single Beam and Complies with International Safety Standards.



For the most recent information on models that have been certified for safety standards, refer to your OMRON website.

⚠ Be sure to read the *"Safety Precautions"* on page 10.

Features

Can be Used as Safety Function of PLc/Safety Category 2 in combination with a Safety Controller (G9SP-series/NX-series Safety Control Unit).

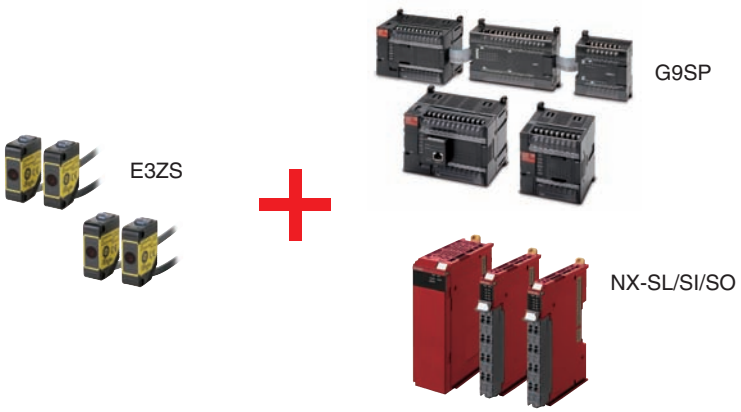

Application Examples

For gaps in small-sized equipment

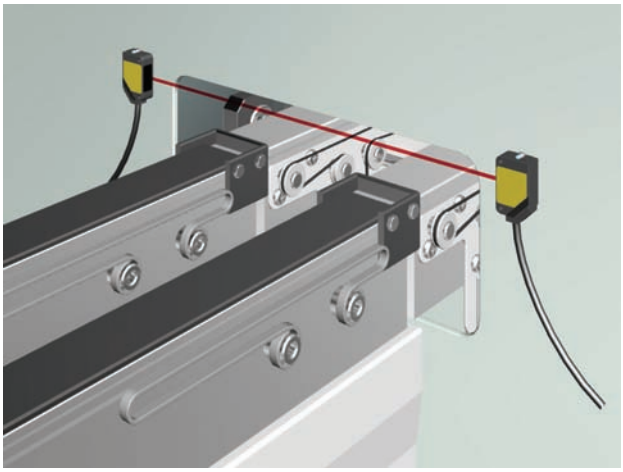

Can be used to protect personnel from the hazards of gaps in equipment or of semi-automated machinery.

Make sure to connect the E3ZS to a safety controller conforming to related standards when using it as a Human Body Detection Sensor (Type 2) to ensure the safety of production facilities.
Although the E3ZS by itself conforms to PLc/Safety Category 1 (EN ISO13849-1), it cannot be used by itself in human detection safety applications.

Ordering Information

Sensors

Red light

Sensor method	Appearance	Case material	Sheath material	Connection method	Sensing distance	Output	Model
Through-beam		Polybutylene terephthalate	PVC	Pre-wired cable (2 m)	0.2 to 3 m	PNP	**E3ZS-T81A**

Controller

Safety Controller G9SP Series

Name	No. of I/O points				Unit version	Model
	Safety inputs	Test outputs	Safety outputs	Standard outputs		
Safety Controller	10	4	Semiconductor outputs: 4	4	Ver.2.0	**G9SP-N10S**
	10	6	Semiconductor outputs: 16	---		**G9SP-N10D**
	20	6	Semiconductor outputs: 8	---		**G9SP-N20S**

Note: For details, refer to the G9SP Catalog (F090).

NX-series Safety Control Units
Safety CPU Unit

Unit type	Specifications				Unit version	Model
	Maximum number of safety I/O points	Program capacity	Number of safety master connections	I/O refreshing method		
Safety CPU Unit	256 points	512 KB	32	Free-Run refreshing	Ver.1.1	**NX-SL3300**
	1024 points	2048 KB	128	Free-Run refreshing		**NX-SL3500**

Note: For details, refer to NX-series Safety Controller (EtherCAT System) Catalog (Cat. No. F101) or NX-series Safety Controller Stand-alone System brochure (Cat. No. F100).

Safety Input Units

Unit type	Specifications						Unit version	Model
	Number of safety input points	Number of test output points	Internal I/O common	Rated input voltage	Number of safety slave connections	I/O refreshing method		
Safety Input Units	4 points	2 points	Sinking inputs (PNP)	24 VDC	1	Free-Run refreshing	Ver.1.1	**NX-SIH400**

Note: For details, refer to NX-series Safety Controller (EtherCAT System) Catalog (Cat. No. F101) or NX-series Safety Controller Stand-alone System brochure (Cat. No. F100).

Accessories

Sensor Mounting Bracket (for E3ZS)

Appearance	Model
	E39-L104

Mutual Interference Prevention Filter (for E3ZS)

Dimensions	Model	Quantity	Remarks
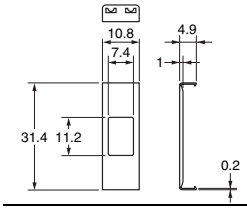	E39-E11	2 per Emitter and Receiver (4 total)	For use with E3ZS-T81A. This filter prevents mutual interference by changing the direction of polarized light of the 2 adjacent Emitter/ Receivers. However, when the filter is attached, the maximum sensing distance of the E3ZS is reduced to 1.5 m.

Note: The polarization directions of the Filters are offset by 90° to prevent interference. When you install the Emitter and Receiver, install them at the same angle to maintain this offset.

Specifications

E3ZS

Item	Model	E3ZS-T81A
Sensor type		Through-beam models
Safety category		See Applicable standards.
Standard sensing object		Opaque object: 18 mm in diameter or greater
Lens diameter		Diameter 6.7 mm / diameter 9 mm
Sensing distance		0.2 to 3 m
Response time (under stable light incident condition)		1.0 ms (E3ZS only)
Startup waiting time		100 ms
Power supply voltage (Vs)		12 to 24 VDC±10% (ripple p-p 10% max.) ✻1
Current consumption (no load)		Emitter: 15 mA max. Receiver: 20 mA max.
Light source (emitted wavelength)		Red LED (660 nm)
Effective aperture angle (EAA)		±5° (at 3 m)
Control output		PNP transistor output, load current: 100 mA max. OFF current: 0.5 mA max. Minimum current used: 1 mA Residual voltage: 1 V max. (when load current is less than 10 mA) Residual voltage: 2 V max. (when load current is between 10 mA and 100 mA) (except for voltage drop due to cable extension)
Output operation mode		Light-ON ✻
Input voltage		22.5 to 24 VDC: Emitter OFF (source current: 3 mA max.) Open or 0 to 2.5 V: Emitter ON (leakage current: 0.1 mA max.)
Indicators		Emitter: Emitting (orange) Receiver: Operation (orange), Stable (green)
Test functions		External test (light emission stop function by test input)
Connection method		Pre-wired cable (2 m)
Protective circuits		Power supply/output reverse connection protection, load short-circuit protection
Ambient temperature		Operating: −10 to 55°C Storage: −10 to 70°C (with no icing or condensation)
Ambient humidity		Operating: 35% to 85%, storage: 35% to 95% (with no icing or condensation)
Ambient operating light intensity		Incandescent lamp: 3000 lx max (light intensity on the receiver surface). Sunlight: 10,000 lx max (light intensity on the receiver surface).
Insulation resistance		20 MΩ min. (at 500 VDC)
Dielectric strength		1000 VAC 50/60 Hz 1 min
Degree of protection		IP67 (IEC standard)
Vibration resistance	Operating limit	5 to 150 Hz, 7 mm double amplitude/ 1 G acceleration, 10 sweeps for each X, Y, and Z directions (IEC TR 60721-4-3 Class 3M4)
	Durability	10 to 55 Hz, 1.5 mm double amplitude, 2 hours for each X, Y and Z directions
Shock resistance	Operating limit	15 G acceleration, 6 ms pulse duration, 100 time for each direction of 3 mutually perpendicular axes (600 in total) (IEC TR 60721-4-3 Class 3M4)
	Durability	500 m/s^2 (approx. 50 G), 3 times for each X, Y, and Z directions
Material		Case: Polybutylene terephthalate
Weight (packed state)		Approx. 120 g (for one set including 2-m cable)
Accessories		Operation manual
Applicable standards	Sensor only	IEC 60947-5-3 (PDDB) EN ISO13849-1 (PLc/Safety Category 1)
	Sensor connected to safety controller	IEC(EN)61496-1 Type2 ESPE IEC (EN)61496-2 Type2 AOPD EN ISO13849-1 (PLc/Safety Category 2)

Note: Connect the Sensor to a safety controller conforming to related standards to use it as a safety device or as part of a safety system.

✻ Depending on the wiring, this may turn ON when light is interrupted.
For your safety, be sure to connect the pink receiver wire (mode selection input) to 24 VDC to turn ON when light is incident.

Connections

Circuit Diagram Example

Example of connection to G9SP

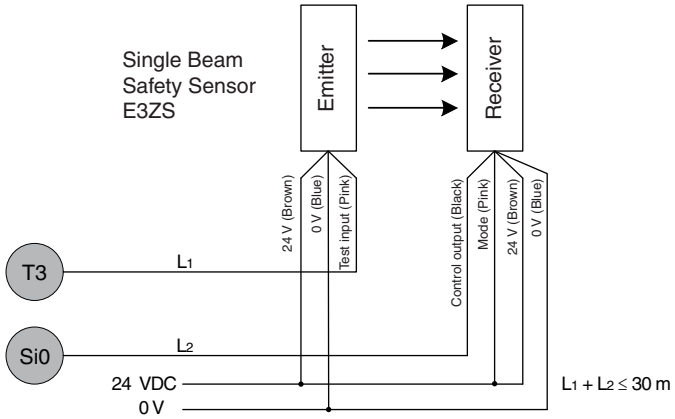

G9SP Configurator Setting Example

Ter...	Name of settings	I/O Comment	Test Source
Si0	Single Beam Safety ...	Single Beam	T3

Note: 1. Only one E3ZS Single Beam Safety Sensor can be connected to a G9SP-series Safety Controller with unit version 1.0 or unit version 1.1. The maximum number of E3ZS Single Beam Safety Sensors that can be connected to a G9SP-series Safety Controller with unit version 2.0 or later is as follows:
G9SP-N10S: 4 (1 Sensor · 4 systems)
G9SP-N10D/20S: 6 (1 Sensor · 6 systems)

2. The total wiring length (L_1 + L_2 in the above figure) for the E3ZS Single Beam Safety Sensor must be 30 m or less.

3. The E3ZS Single Beam Safety Sensor can be used in a Safety Category 2 or lower, or PLc or lower application. It cannot be used in a Safety Category 3 or higher, or PLd or higher application.

4. If you use more than one Single Beam Safety Sensor, it may not be possible to detect short circuits between wires. To satisfy safety category 2, you must protect the cables to the Single Beam Safety Sensors from external damage. Use ducts, separate the cables for each system, or implement other measures to protect the cables from external damage when you connect the Single Beam Safety Sensors.

5. The test period for a Single Beam Safety Sensor test is as given below. Use the value as reference to determine conformance with standards for your system.
G9SP-N10S: 112 × Cycle time (ms)
G9SP-N10D/20S: 168 × Cycle time (ms)

Example of connection to NX-series Safety Control Unit

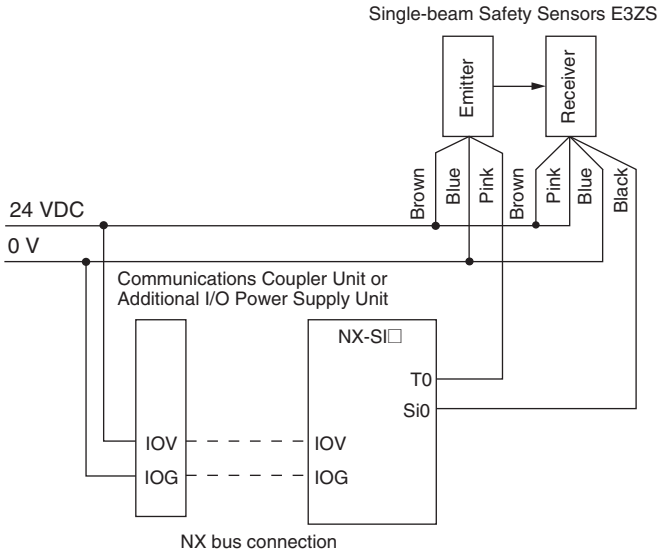

Example of Sysmac Studio Settings

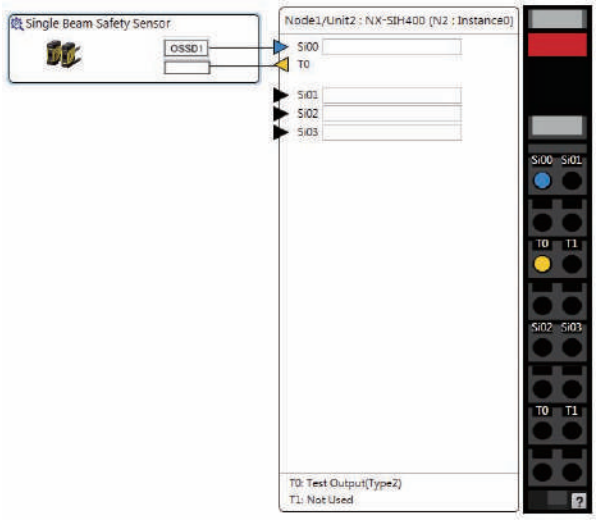

Note: 1. The maximum number of connections per Unit is as follows:
NX-SIH400: 4

2. You can branch the connections to up to four Single-beam Safety Sensors for each Test Out-put.

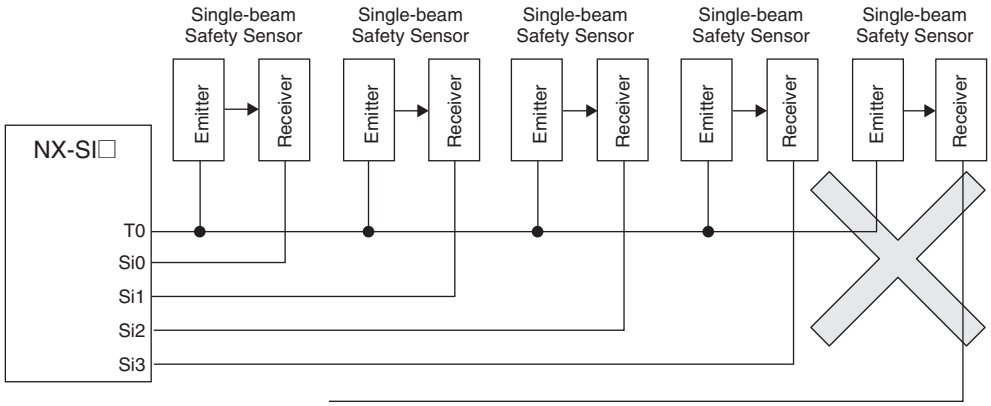

3. Series connections are not possible.

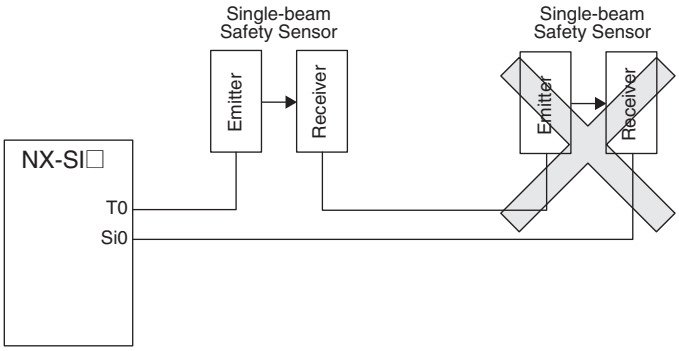

4. The total wiring length for the E3ZS Single-beam Safety Sensors is 30 m max.

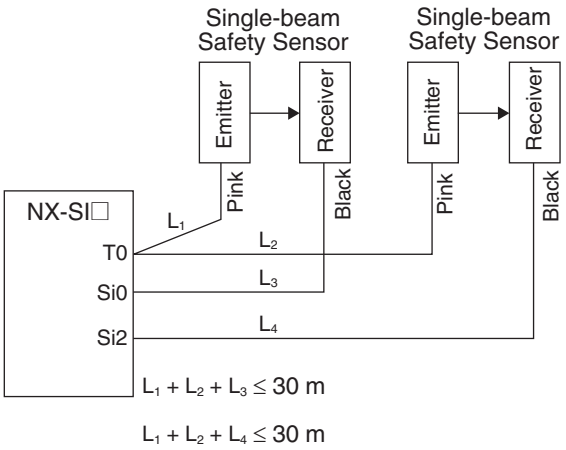

5. The E3ZS Single-beam Safety Sensor can be used in a Safety Category 2 or lower or PLc or lower application. It cannot be used in a Safety Category 3 or higher, or PLd or higher application.
6. If you use more than one Single-beam Safety Sensor, it may not always be possible to detect shorts between wires. Therefore, to satisfy safety category 2, the cables must be protected from external damage for connections to single beam safety sensors. Use ducts or separate cables for each system to protect the cables from external damage when you connect the Single-beam Safety Sensors.
7. The test period for a Single-beam Safety Sensor is 1,200 ms. Use this value for reference to determine the standard compliance of your system.

I/O Circuit Diagrams

Output mode: ON when light is incident (Light ON)

	I/O circuit
Receiver	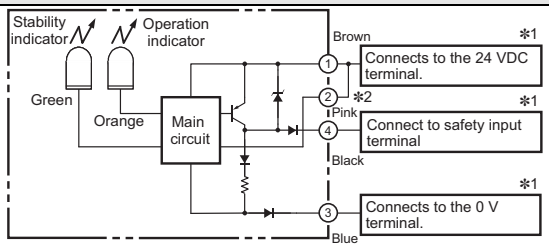
Emitter	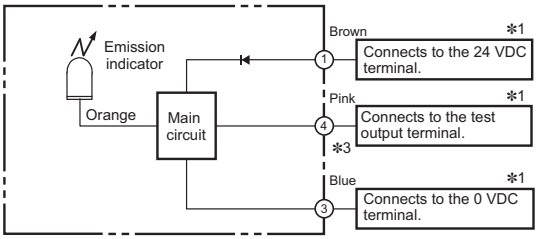

Timing Charts

Reciever

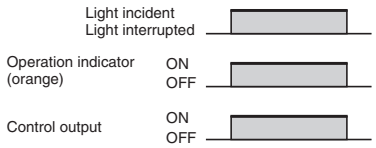

Emitter

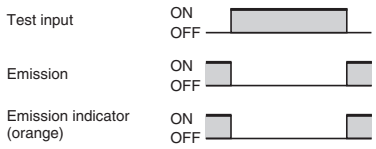

✻1. When using in Safety Category 2 or Type 2 ESPE configurations, make sure all terminals on a safety controller are properly connected. See the safety controller operation manual for details.
✻2. Make sure to connect the pink wire (mode selection input) to 24 VDC.
✻3. Make sure to connect to the 0V terminal when the E3ZS is not connected to a safety controller and the test input is not used.

Engineering Data

Parallel Operating Range

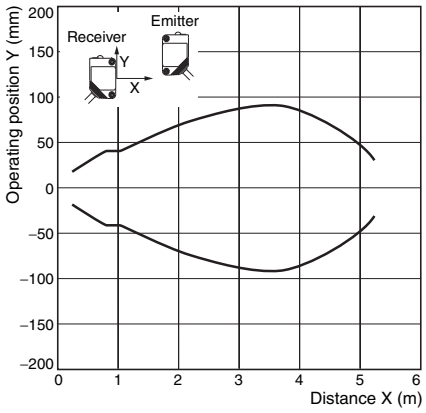

Mutual Interference Range

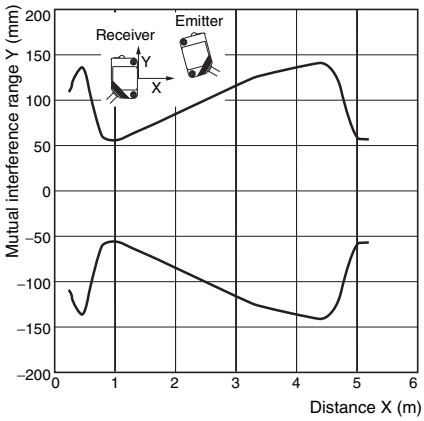

Excess Gain Ratio

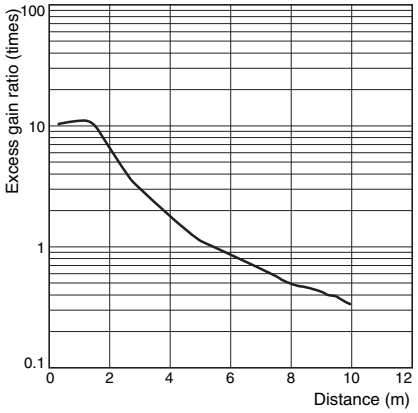

Dimensions

(Unit: mm)

Sensors

Pre-wired Cable with ABS Resin Case

E3ZS-T81A



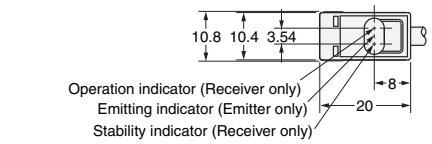

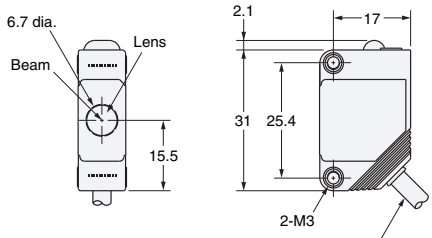

Vinyl-insulated round cord with four Receiver conductors and three Emitter conductors, 4 dia. (cross sections of conductors: 0.2 mm^2, insulation system: 1.1 mm dia.) Standard length: 2 m

Accessories (Order Separately)

Sensor Mounting Bracket (for E3ZS)

E39-L104



Material: Stainless steel (SUS304)

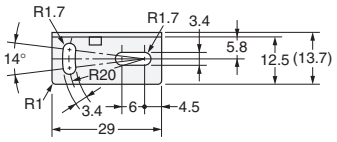

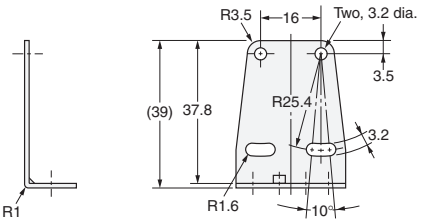

Safety Precautions

Indication and Meaning for Safe Use

⚠ WARNING	**Indicates a potentially hazardous situation which, if not avoided, will result in minor or moderate injury, or may result in serious injury or death. Additionally there may be significant property damage.**
Precautions for Safe Use	**Supplementary comments on what to do or avoid doing, to use the product safely.**
Precautions for Correct Use	**Supplementary comments on what to do or avoid doing, to prevent failure to operate, or undesirable effect on product performance.**

⚠ WARNING

When the single beam safety sensor model E3ZS is used as a safety device or a part of safety systems for ensuring safety of personnel, be sure to use it with an appropriate safety controller.

⚠ WARNING

If the mode selection input (the pink wire) of the receiver is connected to 0V, the output turns ON when light is interrupted (Dark ON), which no longer configures the safety system. Be sure to connect the mode selection input (the pink wire) to 24V DC to make the sensor output ON when light is incident (Light ON).

Always maintain a safe distance between the E3ZS and a hazardous part of a machine. Be sure to refer to the related standards (ISO 13855) for the calculation of safety distance.

Use an opaque test rod with 18mm in diameter and 200mm or greater in effective length to check the detection capability. The E3ZS cannot detect transparent materials.

Do not use the E3ZS in a reflective configuration, otherwise detection may fail.

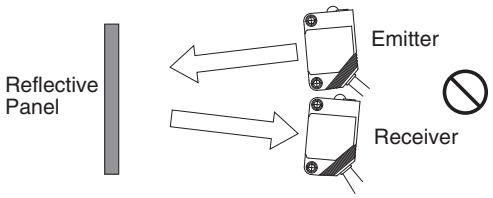

Do not install the E3ZS in a location where it can be affected by wall reflections to avoid detection failure, which may result in serious injury.

When using multiple sets of E3ZS, arrange them to prevent mutual interference. Failure to do so may cause the sensor not to detect, resulting in serious injury.

The E3ZS does not offer protection to the operator's body from projectiles existing the hazardous area. Proper means of mechanical guarding must be provided to ensure protection from these potentially hazardous projectiles.

Wiring must be done while the power is turned OFF. Doing it with the power ON may cause an electric shock.

Do not connect the E3ZS to an AC or DC power supply with higher voltage than nominal DC24V. Otherwise the sensor may explode, burn, or cause electric shock. The power supply must conform to regulatory requirements and standards, regarding EMC and electrical equipment safety, of the country where the E3ZS is installed. For example, the power supply must fulfill EN60742 requirements for double insulation and must conform to EMC Directive and Low Voltage Directive in EU.

To meet the Category 2, at least 100 diagnostic-tests must be undertaken between two requests for a safety-related reaction from the E3ZS. For diagnostic-test intervals, refer to user's manuals of safety controllers to be connected.

Precautions for Safe Use

1. When used in combination with a safety controller, also refer to the user's manual of the safety controller for proper connection.
2. A load must not be shorted. A load must not be used with current higher than the rating. Do not apply the reversed supplied voltage. Be sure to route the E3ZS cable separated from high-potential power line or through an exclusive conduit.
3. Do not remove the label (yellow) from the sensor. Doing so may violate the specifications.
4. Wire the cable so that it has some slack and does not prevent personnel or object passage.
   Allow some leeway for the wires and do not tight the wires when connection cable to G9SP, and confirm that any cable may not block the movements of workers or objects.
5. Do not disassemble, repair or modify the E3ZS.
6. Be sure to dispose of the E3ZS as industrial waste.

Precautions for Correct Use

1. Do not install the E3ZS in the following environments:
   - Areas exposed to intense interference light, such as direct sunlight;
   - Areas with high-humidity where condensation is likely to occur;
   - Areas exposed to corrosive, flammable or explosive gases;
   - Areas in the presence of substances, such as heavy smoke or particulate matter, that may deteriorate product quality;
   - Areas exposed to vibration or shock levels higher than specification provisions;
   - Areas where the product may come in direct contact with water, oil, and chemicals;
2. Do not install the E3ZS in water.
3. To extend the cable, use a wire of cross-sectional area 0.3mm^2 or more. However do not extend it more than 30 m.
4. Be careful not to exceed a tightening torque of 0.5 Nm. Also, if it is not tight enough, vibration may cause it to come loose.
5. When cleaning, avoid using thinner, benzene or acetone.

6. Power supply specifications
Do not connect to DC distribution network.
For combined DC power supply, use the following UL certified products:
(1) Limited voltage current circuit that conforms to UL508
Circuit with a power supply that consists of a secondary coil of an insulated transformer that satisfies the following conditions:
- Maximum voltage (with no load) : 30Vrms (42.4V peak) or less, and
- Maximum current : ① 8A or less (including short-circuit), or
② When limited by a circuit protector (fuse, etc.) with the ratings shown in the table below

No-load voltage (V peak)	Maximum current rating (A)
0 to 20	5.0
More than 20, up to 30	$\frac{100}{\text{Peak voltage value}}$

(2) Class 2 power supply unit that conforms to UL1310
(3) Circuit (class 2 circuit) with 30Vrms (42.4V peak) or less of maximum voltage, and which uses a class 2 transformer that conforms to UL1585 as its power supply

7. In a residential environment, this product may cause radio interference, in which case the user may be required to take adequate measures.

Terms and Conditions Agreement

Read and understand this catalog.
Please read and understand this catalog before purchasing the products. Please consult your OMRON representative if you have any questions or comments.

Warranties.
(a) Exclusive Warranty. Omron's exclusive warranty is that the Products will be free from defects in materials and workmanship for a period of twelve months from the date of sale by Omron (or such other period expressed in writing by Omron). Omron disclaims all other warranties, express or implied.
(b) Limitations. OMRON MAKES NO WARRANTY OR REPRESENTATION, EXPRESS OR IMPLIED, ABOUT NON-INFRINGEMENT, MERCHANTABILITY OR FITNESS FOR A PARTICULAR PURPOSE OF THE PRODUCTS. BUYER ACKNOWLEDGES THAT IT ALONE HAS DETERMINED THAT THE
PRODUCTS WILL SUITABLY MEET THE REQUIREMENTS OF THEIR INTENDED USE.
Omron further disclaims all warranties and responsibility of any type for claims or expenses based on infringement by the Products or otherwise of any intellectual property right. (c) Buyer Remedy. Omron's sole obligation hereunder shall be, at Omron's election, to (i) replace (in the form originally shipped with Buyer responsible for labor charges for removal or replacement thereof) the non-complying Product, (ii) repair the non-complying Product, or (iii) repay or credit Buyer an amount equal to the purchase price of the non-complying Product; provided that in no event shall Omron be responsible for warranty, repair, indemnity or any other claims or expenses regarding the Products unless Omron's analysis confirms that the Products were properly handled, stored, installed and maintained and not subject to contamination, abuse, misuse or inappropriate modification. Return of any Products by Buyer must be approved in writing by Omron before shipment. Omron Companies shall not be liable for the suitability or unsuitability or the results from the use of Products in combination with any electrical or electronic components, circuits, system assemblies or any other materials or substances or environments. Any advice, recommendations or information given orally or in writing, are not to be construed as an amendment or addition to the above warranty.
See http://www.omron.com/global/ or contact your Omron representative for published information.

Limitation on Liability; Etc.
OMRON COMPANIES SHALL NOT BE LIABLE FOR SPECIAL, INDIRECT, INCIDENTAL, OR CONSEQUENTIAL DAMAGES, LOSS OF PROFITS OR PRODUCTION OR COMMERCIAL LOSS IN ANY WAY CONNECTED WITH THE PRODUCTS, WHETHER SUCH CLAIM IS BASED IN CONTRACT, WARRANTY, NEGLIGENCE OR STRICT LIABILITY.
Further, in no event shall liability of Omron Companies exceed the individual price of the Product on which liability is asserted.

Suitability of Use.
Omron Companies shall not be responsible for conformity with any standards, codes or regulations which apply to the combination of the Product in the Buyer's application or use of the Product. At Buyer's request, Omron will provide applicable third party certification documents identifying ratings and limitations of use which apply to the Product. This information by itself is not sufficient for a complete determination of the suitability of the Product in combination with the end product, machine, system, or other application or use. Buyer shall be solely responsible for determining appropriateness of the particular Product with respect to Buyer's application, product or system. Buyer shall take application responsibility in all cases.
NEVER USE THE PRODUCT FOR AN APPLICATION INVOLVING SERIOUS RISK TO LIFE OR PROPERTY OR IN LARGE QUANTITIES WITHOUT ENSURING THAT THE SYSTEM AS A WHOLE HAS BEEN DESIGNED TO ADDRESS THE RISKS, AND THAT THE OMRON PRODUCT(S) IS PROPERLY RATED AND INSTALLED FOR THE INTENDED USE WITHIN THE OVERALL EQUIPMENT OR SYSTEM.

Programmable Products.
Omron Companies shall not be responsible for the user's programming of a programmable Product, or any consequence thereof.

Performance Data.
Data presented in Omron Company websites, catalogs and other materials is provided as a guide for the user in determining suitability and does not constitute a warranty. It may represent the result of Omron's test conditions, and the user must correlate it to actual application requirements. Actual performance is subject to the Omron's Warranty and Limitations of Liability.

Change in Specifications.
Product specifications and accessories may be changed at any time based on improvements and other reasons. It is our practice to change part numbers when published ratings or features are changed, or when significant construction changes are made. However, some specifications of the Product may be changed without any notice. When in doubt, special part numbers may be assigned to fix or establish key specifications for your application. Please consult with your Omron's representative at any time to confirm actual specifications of purchased Product.

Errors and Omissions.
Information presented by Omron Companies has been checked and is believed to be accurate; however, no responsibility is assumed for clerical, typographical or proofreading errors or omissions.

2024.6

In the interest of product improvement, specifications are subject to change without notice.

OMRON Corporation
Industrial Automation Company

http://www.ia.omron.com/

(c)Copyright OMRON Corporation 2024 All Right Reserved.