Cat. No. I570-E2-02B

MX2

Born to drive machines
Model: 3G3MX2
200 V Class Three-Phase Input 0.1 to 15 kW
200 V Class Single-Phase Input 0.1 to 2.2 kW
400 V Class Three-Phase Input 0.4 to 15 kW

USER´S MANUAL



Notice:

OMRON products are manufactured for use according to proper procedures by a qualified operator and only for the purposes described in this manual.

The following conventions are used to indicate and classify precautions in this manual. Always heed the information provided with them. Failure to heed precautions can result in injury to people or damage to property.

OMRON Product References

All OMRON products are capitalized in this manual. The word “Unit” is also capitalized when it refers to an OMRON product, regardless of whether or not it appears in the proper name of the product.

© **OMRON, 2013**

All rights reserved. No part of this publication may be reproduced, stored in a retrieval system, or transmitted, in any form, or by any means, mechanical, electronic, photocopying, recording, or otherwise, without the prior written permission of OMRON.

No patent liability is assumed with respect to the use of the information contained herein. Moreover, because OMRON is constantly striving to improve its high-quality products, the information contained in this manual is subject to change without notice. Every precaution has been taken in the preparation of this manual. Nevertheless, OMRON assumes no responsibility for errors or omissions. Neither is any liability assumed for damages resulting from the use of the information contained in this publication.

Warranty and Limitations of Liability

WARRANTY
OMRON's exclusive warranty is that the products are free from defects in materials and workmanship for a period of one year (or other period if specified) from date of sale by OMRON. OMRON MAKES NO WARRANTY OR REPRESENTATION, EXPRESS OR IMPLIED, REGARDING NONINFRINGEMENT, MERCHANTABILITY, OR FITNESS FOR PARTICULAR PURPOSE OF THE PRODUCTS. ANY BUYER OR USER ACKNOWLEDGES THAT THE BUYER OR USER ALONE HAS DETERMINED THAT THE PRODUCTS WILL SUITABLY MEET THE REQUIREMENTS OF THEIR INTENDED USE. OMRON DISCLAIMS ALL OTHER WARRANTIES, EXPRESS OR IMPLIED.

LIMITATIONS OF LIABILITY
OMRON SHALL NOT BE RESPONSIBLE FOR SPECIAL, INDIRECT, OR CONSEQUENTIAL DAMAGES, LOSS OF PROFITS OR COMMERCIAL LOSS IN ANY WAY CONNECTED WITH THE PRODUCTS, WHETHER SUCH CLAIM IS BASED ON CONTRACT, WARRANTY, NEGLIGENCE, OR STRICT LIABILITY. In no event shall the responsibility of OMRON for any act exceed the individual price of the product on which liability is asserted. IN NO EVENT SHALL OMRON BE RESPONSIBLE FOR WARRANTY, REPAIR, OR OTHER CLAIMS REGARDING THE PRODUCTS UNLESS OMRON'S ANALYSIS CONFIRMS THAT THE PRODUCTS WERE PROPERLY HANDLED, STORED, INSTALLED, AND MAINTAINED AND NOT SUBJECT TO CONTAMINATION, ABUSE, MISUSE, OR INAPPROPRIATE MODIFICATION OR REPAIR.

Application Considerations

SUITABILITY FOR USE
OMRON shall not be responsible for conformity with any standards, codes, or regulations that apply to the combination of products in the customer's application or use of the products. At the customer's request, OMRON will provide applicable third party certification documents identifying ratings and limitations of use that apply to the products. This information by itself is not sufficient for a complete determination of the suitability of the products in combination with the end product, machine, system, or other application or use. The following are some examples of applications for which particular attention must be given. This is not intended to be an exhaustive list of all possible uses of the products, nor is it intended to imply that the uses listed may be suitable for the products: o Outdoor use, uses involving potential chemical contamination or electrical interference, or conditions or uses not described in this manual. o Nuclear energy control systems, combustion systems, railroad systems, aviation systems, medical equipment, amusement machines, vehicles, safety equipment, and installations subject to separate industry or government regulations. o Systems, machines, and equipment that could present a risk to life or property. Please know and observe all prohibitions of use applicable to the products. NEVER USE THE PRODUCTS FOR AN APPLICATION INVOLVING SERIOUS RISK TO LIFE OR PROPERTY WITHOUT ENSURING THAT THE SYSTEM AS A WHOLE HAS BEEN DESIGNED TO ADDRESS THE RISKS, AND THAT THE OMRON PRODUCTS ARE PROPERLY RATED AND INSTALLED FOR THE INTENDED USE WITHIN THE OVERALL EQUIPMENT OR SYSTEM.

PROGRAMMABLE PRODUCTS
OMRON shall not be responsible for the user's programming of a programmable product, or any consequence thereof.

Disclaimers

CHANGE IN SPECIFICATIONS
Product specifications and accessories may be changed at any time based on improvements and other reasons. It is our practice to change model numbers when published ratings or features are changed, or when significant construction changes are made. However, some specifications of the products may be changed without any notice. When in doubt, special model numbers may be assigned to fix or establish key specifications for your application on your request. Please consult with your OMRON representative at any time to confirm actual specifications of purchased products.

DIMENSIONS AND WEIGHTS
Dimensions and weights are nominal and are not to be used for manufacturing purposes, even when tolerances are shown.

PERFORMANCE DATA
Performance data given in this manual is provided as a guide for the user in determining suitability and does not constitute a warranty. It may represent the result of OMRON's test conditions, and the users must correlate it to actual application requirements. Actual performance is subject to the OMRON Warranty and Limitations of Liability.

ERRORS AND OMISSIONS
The information in this manual has been carefully checked and is believed to be accurate; however, no responsibility is assumed for clerical, typographical, or proofreading errors, or omissions.

Table of contents

Safety Messages ..... **vi**
Hazardous High Voltage vi
General Precautions - Read These First! vii
Index to Warnings and Cautions in This Manual ix
General Warnings and Cautions xv
Precautions for Safe Use xviii
UL® Cautions, Warnings and Instructions xix
Fuse Sizes xxii
Revision History xxiii

SECTION 1
Getting Started **1**
Introduction 1
MX2 Inverter Specifications 3
Introduction to Variable-Frequency Drives 14
Frequently Asked Questions 18
International Standards 20

SECTION 2
Inverter Mounting and Installation **21**
Orientation to Inverter Features 21
Basic System Description 28
Step-by-Step Basic Installation 29
Powerup Test 56
Using the Front Panel Keypad 58

SECTION 3
Configuring Drive Parameters **69**
Choosing a Programming Device 69
Using the Keypad Devices 70
“D” Group: Monitoring Functions 74
“F” Group: Main Profile Parameters 89
“A” Group: Standard Functions 90
“B” Group: Fine Tuning Functions 121
“C” Group: Intelligent Terminal Functions 153
“H” Group: Motor Constants Functions 172
“P” Group: Other Parameters 179

SECTION 4
Operations and Monitoring **191**
Introduction 191
Connecting to PLCs and Other Devices 193
Control Logic Signal Specifications 195
Intelligent Terminal Listing 198
Using Intelligent Input Terminals 201
Using Intelligent Output Terminals 225
Analog Input Operation 250
Analog Output Operation 252

SECTION 5
Inverter System Accessories 255
Introduction 255
Component Descriptions 256
Dynamic Braking 262

SECTION 6
Troubleshooting and Maintenance 267
Troubleshooting 267
Monitoring Trip Events, History, & Conditions 273
Restoring Factory Default Settings 279
Maintenance and Inspection 280
Warranty 287

Appendix A
Glossary and Bibliography 289
Glossary 289
Bibliography 294

Appendix B
ModBus Network Communications 295
Introduction 295
Connecting the Inverter to ModBus 296
Network Protocol Reference 298
ModBus Data Listing 316
ModBus mapping 347

Appendix C
Drive Parameter Setting Tables 357
Introduction 357
Parameter Settings for Keypad Entry 357

Appendix D
CE-EMC Installation Guidelines 373
CE-EMC Installation Guidelines 373
Omron EMC Recommendations 377

Appendix E
Safety (ISO 13849-1) 379
Introduction 379
Stop Category defined in EN60204-1 379
How it works 379
Activation 380
Installation 380
Wiring example 381
Components to be combined 383
Periodical check (Proof test) 383
Precautions 384
EC DECLARATION OF CONFORMITY 385
Safety Certification 388

Appendix F
Unprotected Inverter Operation Mode 389
Unprotected Inverter Operation Mode 389

Safety Messages

For the best results with the MX2 Series inverter, carefully read this manual and all of the warning labels attached to the inverter before installing and operating it, and follow the instructions exactly. Keep this manual handy for quick reference.

Definitions and Symbols

A safety instruction (message) includes a “Safety Alert Symbol” and a signal word or phrase such as WARNING or CAUTION. Each signal word has the following meaning:

⚠ **HIGH VOLTAGE** This symbol indicates high voltage related warnings. It calls your attention to items or operations that could be dangerous to you and other persons operating this equipment.

Read the message and follow the instructions carefully.

⚠ **WARNING** indicates a potentially hazardous situation that, if not avoided, may result in serious injury or death, or minor or moderate injury. Additionally there may be significant property damage.

⚠ **Caution** Indicates a potentially hazardous situation which, if not avoided, may result in minor or moderate injury or in severe property damage.

Step 1 Indicates a step in a series of action steps required to accomplish a goal. The number of the step will be contained in the step symbol.

Note Notes indicates an area or subject of special merit, emphasizing either the product's capability or common errors in operation or maintenance.

⚠ **Tip** Tips give a special instruction that can save time or provide other benefits while installing or using the product. The tip calls attention to an idea that may not be obvious to first-time users of the product.

1 Hazardous High Voltage

⚠ **HIGH VOLTAGE** Motor control equipment and electronic controllers are connected to hazardous line voltages. When servicing drives and electronic controllers, there may be exposed components with housing or protrusions at or above line potential. Extreme care should be taken to protect against shock.

Stand on an insulating pad and make it a habit to use only one hand when checking components. Always work with another person in case an emergency occurs. Disconnect power before checking controllers or performing maintenance. Be sure equipment is properly grounded. Wear safety glasses whenever working on electronic controllers or rotating machinery.

1-1 Caution when using Safe Stop Function

When using Safe Stop function, make sure to check whether the safe stop function properly works when installation (before starting operation). Please carefully refer to Appendix E *Safety (ISO 13849-1)* on page 379

2 General Precautions - Read These First!

⚠ **WARNING** This equipment must be installed, adjusted, and serviced by qualified electrical maintenance personnel familiar with the construction and operation of the equipment and the hazards involved. Failure to observe this precaution may result in bodily injury.

⚠ **WARNING** The user is responsible to ensure that all driven machinery, drive train mechanism not supplied by OMRON, and process line material are capable of safe operation at an applied frequency of 150% of the maximum selected frequency range to the AC motor. Failure to do so can result in destruction of equipment and injury to personnel should a single-point failure occur.

⚠ **WARNING** For equipment protection, install a ground leakage type breaker with a fast response circuit capable of handling large currents. The ground fault protection circuit is not designed to protect against personal injury.

⚠ **WARNING** HAZARDOUS OF ELECTRICAL SHOCK. DISCONNECT INCOMING POWER BEFORE CHANGING WIRING, PUT ON OR TAKE OFF OPTIONAL DEVICES OR REPLACE COOLING FANS.

⚠ **WARNING** Wait at least ten (10) minutes after turning OFF the input power supply before performing maintenance or an inspection. Otherwise, there is the danger of electric shock.

⚠ **Caution** Make sure to read and clearly understand these instructions before working on MX2 series equipment.

⚠ **Caution** Proper grounds, disconnecting devices and other safety devices and their location are the responsibility of the user and are not provided by OMRON

⚠ **Caution** Be sure to connect a motor thermal disconnect switch or overload device to the MX2 series controller to assure that the inverter will shut down in the event of an overload or an overheated motor.

⚠ **HIGH VOLTAGE** Dangerous voltage exists until power light is OFF. Wait at least ten (10) minutes after input power is disconnected before performing maintenance.

⚠ **WARNING** This equipment has high leakage current and must be permanently (fixed) hard-wire to earth ground via two independent cables.

⚠ **WARNING** Rotating shafts and above-ground electrical potentials can be hazardous. Therefore, make sure that all electrical work conform to the National Electrical Codes and local regulations. Installation, alignment and maintenance must be performed only by qualified personnel.

⚠ **Caution**

a) Class I motor must be connected to earth ground via low resistive path (<0.1)

b) Any motor used must be of a suitable rating.

c) Motors may have hazardous moving path. In this event suitable protection must be provided.

⚠ **Caution** Alarm connection may contain hazardous live voltage even when inverter is disconnected. When removing the front cover for maintenance or inspection, confirm that incoming power for alarm connection is completely disconnected.

⚠ **Caution** Hazardous (main) terminals for any interconnection (motor, contact breaker, filter, etc.) must be inaccessible in the final installation.

⚠ **Caution** The equipment is intended for installation in a cabinet. The end application must be in accordance with BS EN60204-1. Refer to the section “Choosing a Mounting Location” on page 29. The diagram dimensions are to be suitably amended for your application.

⚠ **Caution** Connection to field wiring terminals must be reliably fixed having two independent means of mechanical support. Use a termination with cable support (figure below), or strain relief, cable clamp, etc.

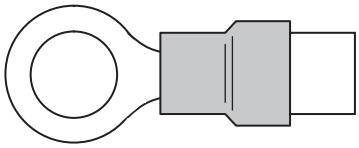

⚠ **Caution** A double-pole disconnection device must be fitted to the incoming main power supply close to the inverter. Additionally, a protection device meet IEC947-1/

IEC947-3 must be fitted at this point (protection device data shown in 2-3-6 *Determining Wire and Fuse Sizes* on page 45).

Note The above instructions, together with any other requirements highlighted in this manual, must be followed for continue LVD (European Low Voltage Directive) compliance.

3 Index to Warnings and Cautions in This Manual

Cautions and Warnings for Orientation and Mounting Procedures

⚠ **HIGH VOLTAGE** Hazard of electrical shock. Disconnect incoming power before changing wiring, put on or take off optional devices or replace cooling fans. Wait ten (10) minutes before removing the front cover. **22**

⚠ **HIGH VOLTAGE** Hazard of electrical shock. Never touch the naked PCB (printed circuit board) portions while the unit is powered up. Even for switch portion, the inverter must be powered OFF before you change. **29**

⚠ **WARNING** In the cases below involving a general-purpose inverter, a large peak current may flow on the power supply side, sometimes destroying the converter module: **29**

1. The unbalance factor of the power supply is 3% or higher.
2. The power supply capacity is at least 10 times greater than the inverter capacity (or the power supply capacity is 500kVA or more).
   a) Abrupt power supply changes are expected, due to the conditions such as:
   b) Several inverters are interconnected with a short bus.
   c) A thyristor converter and an inverter are interconnected with a short bus.
   d) An installed phase advance capacitor opens and closes.

⚠ **Caution** Be sure to install the unit on flame-resistant material such as a steel plate. Otherwise, there is the danger of fire. **29**

⚠ **Caution** Be sure not to place any flammable materials near the inverter. Otherwise, there is the danger of fire. **29**

⚠ **Caution** Be sure not to let the foreign matter enter vent openings in the inverter housing, such as wire clippings, spatter from welding, metal shavings, dust, etc. Otherwise, there is the danger of fire. **30**

⚠ **Caution** Be sure to install the inverter in a place that can bear the weight according to the specifications in the text (Chapter 1, Specifications Tables). Otherwise, it may fall and cause injury to personnel. **30**

⚠ **Caution** Be sure to install the unit on a perpendicular wall that is not subject to vibration. Otherwise, it may fall and cause injury to personnel. **30**

⚠ **Caution** Be sure not to install or operate an inverter that is damaged or has missing parts. Otherwise, it may cause injury to personnel. 2-9Be sure to install the inverter in a well-ventilated room that does not have direct exposure to sunlight, a tendency for high temperature, high humidity or dew condensation, high levels of dust, corrosive gas, explosive gas, inflammable gas, grinding-fluid mist, salt damage, etc. Otherwise, there is the danger of fire. **30**

⚠ **Caution** Be sure to maintain the specified clearance area around the inverter and to provide adequate ventilation. Otherwise, the inverter may overheat and cause equipment damage or fire. **32**

Wiring - Warnings for Electrical Practice and Wire Specifications

⚠ **WARNING** "USE 60/75 C Cu wire only" or equivalent. For models 3G3MX2-AB004, -AB007, -AB022, -A2015, -A2022, -A2037, -A2055, -A2075. ..... **45**

⚠ **WARNING** "USE 75 C Cu wire only" or equivalent. For models 3G3MX2-AB002, -AB004, A2002, -A2004, -A2007, -A4022, -A4030, -A4040, -A4055, -A4075. ..... **45**

⚠ **WARNING** "USE 60 C Cu wire only" or equivalent. For models 3G3MX2-A4004, -A4007, and -A4015. ..... **45**

⚠ **WARNING** "Open Type Equipment."..... **46**

⚠ **WARNING** "Suitable for use on a circuit capable of delivering not more than 100k rms symmetrical amperes, 240V maximum when protected by Class CC, G, J or R fuses or circuit breaker having an interrupting rating not les than 100,000 rms symmetrical amperes, 240 volts maximum". For 200V models..... **42**

⚠ **WARNING** "Suitable for use on a circuit capable of delivering not more than 100k rms symmetrical amperes, 480V maximum when protected by Class CC, G, J or R fuses or circuit breaker having an interrupting rating not les than 100,000 rms symmetrical amperes, 480 volts maximum." For 400V models **42**

⚠ **HIGH VOLTAGE** Be sure to ground the unit. Otherwise, there is a danger of electric shock and/or fire. **42**

⚠ **HIGH VOLTAGE** Wiring work shall be carried out only by qualified personnel. Otherwise, there is a danger of electric shock and/or fire. **42**

⚠ **HIGH VOLTAGE** Implement wiring after checking that the power supply is OFF. Otherwise, you may incur electric shock and/or fire. **42**

⚠ **HIGH VOLTAGE** Do not connect wiring to an inverter operate an inverter that is not mounted according to the instructions given in this manual.....**42**
Otherwise, there is a danger of electric shock and/or injury to personnel.

⚠ **WARNING** Make sure the input power to the inverter is OFF. If the drive has been powered, leave it OFF for ten minutes before continuing.....**55**.

Wiring - Cautions for Electrical Practice

⚠ **Caution** Fasten the screws with the specified fastening torque in the table provided. Check for any loose screws. Otherwise, there is danger of fire. **46**

⚠ **Caution** Be sure that the input voltage matches the inverter specifications;

- Single phase 200V to 240V 50/60Hz (up to 2.2kW) for “AB” model
- Three phase 200V to 240V 50/60Hz (up to 15kW) for “A2” model
- Three phase 380V to 480V 50/60Hz (up to 15kW) for “A4” model **49**

⚠ **Caution** Be sure not to power a three-phase-only inverter with single phase power. Otherwise, there is the possibility of damage to the inverter and the danger of fire. **49**

⚠ **Caution** Be sure not to connect an AC power supply to the output terminals. Otherwise, there is the possibility of damage to the inverter and the danger of injury and/or fire. **50**

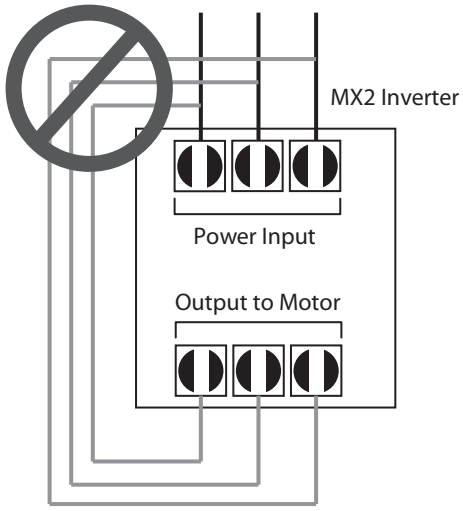

⚠ **Caution** Be sure to use a specified type of braking resistor/regenerative braking unit. In case of a braking resistor, install a thermal relay that monitors the temperature of the resistor. Not doing so might result in a moderate burn due to the heat generated in the braking resistor/regenerative braking unit.
Configure a sequence that enables the inverter power to turn off when unusual overheating is detected in the braking resistor/regenerative braking unit.

Transporting and Installation

- Do not drop or apply strong impact on the product. Doing so may result in damaged parts or malfunction.
- Do not hold by the terminal block cover, but hold by the fins during transportation.
- Do not connect any load other than a three-phase inductive motor to the U, V and W output terminals.

⚠ **Caution** Remarks for using ground fault interrupter breakers in the main power supply: Adjustable frequency inverter with integrated CE-filters and shielded (screened) motor cables have a higher leakage current toward earth GND. Especially at the moment of switching ON this can cause an inadvertent trip of ground fault interrupters. Because of the rectifier on the input side of the inverter there is the possibility to stall the switch-off function through small amounts of DC current. **50**

Please observe the following:

- Use only short time-invariant and pulse current-sensitive ground fault interrupters with higher trigger current.
- Other components should be secured with separate ground fault interrupters.
- Ground fault interrupters in the power input wiring of an inverter are not an absolute protection against electric shock. **50**

⚠ **Caution** Be sure to install a fuse in each phase of the main power supply to the inverter. Otherwise, there is the danger of fire. **50**

⚠ **Caution** For motor leads, ground fault interrupter breakers and electromagnetic contactors, be sure to size these components properly (each must have the capacity for rated current and voltage). Otherwise, there is the danger of fire. **50**

Powerup Test Caution Messages

⚠ **Caution** The heat sink fins will have a high temperature. Be careful not to touch them. Otherwise, there is the danger of getting burned. **56**

⚠ **Caution** The operation of the inverter can be easily changed from low speed to high speed. Be sure to check the capability and limitations of the motor and machine before operating the inverter. Otherwise, there is the danger of injury. **56**

⚠ **Caution** If you operate a motor at a frequency higher than the inverter standard default setting (50Hz/60Hz), be sure to check the motor and machine specifications with the respective manufacturer. Only operate the motor at elevated frequencies after getting their approval. Otherwise, there is the danger of equipment damage and/or injury. **56**

⚠ **Caution** Check the following before and during the Powerup test. Otherwise, there is the danger of equipment damage.

- Is the shorting bar between the [+1] and [+] terminals installed? DO NOT power or operate the inverter if the jumper is removed.
- Is the direction of the motor rotation correct?
- Did the inverter trip during acceleration or deceleration?
- Were the rpm and frequency meter readings as expected?
- Were there any abnormal motor vibration or noise? **57**

Warnings for Operations and Monitoring

⚠ **WARNING** Be sure to turn ON the input power supply only after closing the front case. While the inverter is energized, be sure not to open the front case. Otherwise, there is the danger of electric shock. **192**

⚠ **WARNING** Be sure not to operate electrical equipment with wet hands. Otherwise, there is the danger of electric shock. **192**

⚠ **WARNING** While the inverter is energized, be sure not to touch the inverter terminals even when the motor is stopped. Otherwise, there is the danger of electric shock. **192**

⚠ **WARNING** If the retry mode is selected, the motor may suddenly restart after a trip stop. Be sure to stop the inverter before approaching the machine (be sure to design the machine so that safety for personnel is secure even if it restarts.) Otherwise, it may cause injury to personnel. **192**

⚠ **WARNING** If the power supply is cut OFF for a short period of time, the inverter may restart operating after the power supply recovers if the Run command is active. If a restart may pose danger to personnel, so be sure to use a lock-out circuit so that it will not restart after power recovery. Otherwise, it may cause injury to personnel. **192**

⚠ **WARNING** The Stop Key is effective only when the stop function is enabled. Be sure to enable the Stop Key separately from the emergency stop. Otherwise, it may cause injury to personnel. **192**

⚠ **WARNING** WARNING: During a trip event, if the alarm reset is applied and the Run command is present, the inverter will automatically restart. Be sure to apply the alarm reset only after verifying the Run command is OFF. Otherwise, it may cause injury to personnel. **192**

⚠ **WARNING** Be sure not to touch the inside of the energized inverter or to put any conductive object into it. Otherwise, there is a danger of electric shock and/or fire. **192**

⚠ **WARNING** If power is turned ON when the Run command is already active, the motor will automatically start and injury may result. Before turning ON the power, confirm that the RUN command is not present. **192**

⚠ **WARNING** When the Stop key function is disabled, pressing the Stop key does not stop the inverter, nor will it reset a trip alarm. **192**

⚠ **WARNING** Be sure to provide a separate, hard-wired emergency stop switch when the application warrants it. **192**

⚠ **WARNING** If the power is turned ON and the Run command is already active, the motor starts rotation and is dangerous! Before turning power ON, confirm that the Run command is not active. **205**

⚠ **WARNING** After the Reset command is given and the alarm reset occurs, the motor will restart suddenly if the Run command is already active. Be sure to set the alarm reset after verifying that the Run command is OFF to prevent injury to personnel. **210**

Cautions for Operations and Monitoring

⚠ **Caution** The heat sink fins will have a high temperature. Be careful not to touch them. Otherwise, there is the danger of getting burned. **56**

⚠ **Caution** The operation of the inverter can be easily changed from low speed to high speed. Be sure to check the capability and limitations of the motor and machine before operating the inverter. Otherwise, it may cause injury to personnel. **191**

⚠ **Caution** If you operate a motor at a frequency higher than the inverter standard default setting (50Hz/60Hz), be sure to check the motor and machine specifications with the respective manufacturer. Only operate the motor at elevated frequencies after getting their approval. Otherwise, there is the danger of equipment damage. **191**

⚠ **Caution** It is possible to damage the inverter or other devices if your application exceeds the maximum current or voltage characteristics of a connection point. **193**

⚠ **Caution** Be sure to turn OFF power to the inverter before changing the short circuit bar position to change SR/SK. Otherwise, damage to the inverter circuitry may occur. **201**

⚠ **Caution** Be careful not to turn PID clear ON and reset the integrator sum when the inverter is in Run mode (output to motor is ON). Otherwise, this could cause the motor to decelerate rapidly, resulting in a trip.

⚠ **HIGH VOLTAGE** When set RDY function ON, there will be a voltage appear at motor output terminals U, V and W even if the motor is in stop mode. So never touch the inverter power terminal even the motor is not running

⚠ **Caution** CAUTION: The digital outputs (relay and/or open collector) available on the drive must not be considered as safety related signals. The outputs of the external safety relay must be used for integration into a safety related control/ command circuit.

⚠ **HIGH VOLTAGE** Dangerous voltage exists even after the Safe Stop is activated. It does NOT mean that the main power has been removed.

Warnings and Cautions for Troubleshooting and Maintenance

⚠ **WARNING** Wait at least ten (10) minutes after turning OFF the input power supply before performing maintenance or an inspection. Otherwise, there is the danger of electric shock.

⚠ **WARNING** Make sure that only qualified personnel will perform maintenance, inspection, and part replacement. Before starting to work, remove any metallic objects from your person (wristwatch, bracelet, etc.). Be sure to use tools with insulated handles. Otherwise, there is a danger of electric shock and/or injury to personnel.

⚠ **WARNING** Never remove connectors by pulling on its wire leads (wires for cooling fan and logic P.C.board). Otherwise, there is a danger of fire due to wire breakage and/or injury to personnel.

⚠ **Caution** Do not connect the megger to any control terminals such as intelligent I/O, analog terminals, etc. Doing so could cause damage to the inverter.

⚠ **Caution** Never test the withstand voltage (HIPOT) on the inverter. The inverter has a surge protector between the main circuit terminals above and the chassis ground.

⚠ **Caution** Do not connect the megger to any control circuit terminals such as intelligent I/O, analog terminals, etc. Doing so could cause damage to the inverter.

⚠ **Caution** Never test the withstand voltage (HIPOT) on the inverter. The inverter has a surge protector between the main circuit terminals above and the chassis ground.

⚠ **Caution** The life of the capacitor depends on ambient temperatures. Refer to the diagram of product life specified in the manual. When the capacitor stops operating at the end of the product's life, the inverter must be replaced.

⚠ **HIGH VOLTAGE** Be careful not to touch wiring or connector terminals when working with the inverters and taking measurements. Be sure to place the measurement circuitry components above in an insulated housing before using them

4 General Warnings and Cautions

⚠ **WARNING** Never modify the unit. Otherwise, there is a danger of electric shock and/or injury.

⚠ **Caution** Withstand voltage test and insulation resistance tests (HIPOT) are executed before the units are shipped, so there is no need to conduct these tests before operation.

⚠ **Caution** Do not attach or remove wiring or connectors when power is applied. Also, do not check signals during operation.

⚠ **Caution** Be sure to connect the grounding terminal to earth ground.

⚠ **Caution** When inspecting the unit, be sure to wait ten minutes after turning OFF the power supply before opening the cover.

⚠ **Caution** Do not stop operation by switching OFF electromagnetic contactors on the primary or secondary side of the inverter.

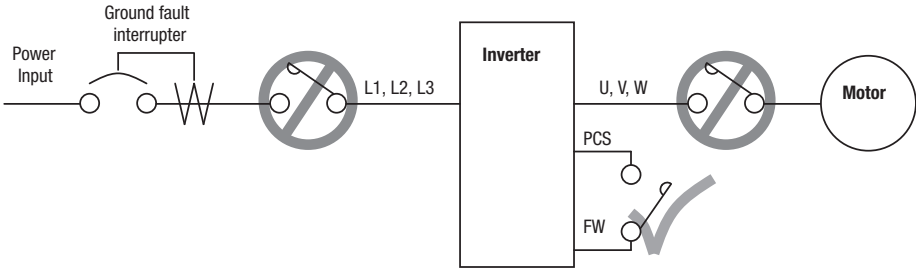

When there has been a sudden power failure while an operation instruction is active, then the unit may restart operation automatically after the power failure has ended. If there is a possibility that such an occurrence may harm humans, then install an electromagnetic contactor (Mgo) on the power supply side, so that the circuit does not allow automatic restarting after the power supply recovers. If the optional remote operator is used and the retry function has been selected, this will also cause automatic restarting when a Run command is active. So, please be careful.

⚠ **Caution** Do not insert leading power factor capacitors or surge absorbers between the output terminals of the inverter and motor.

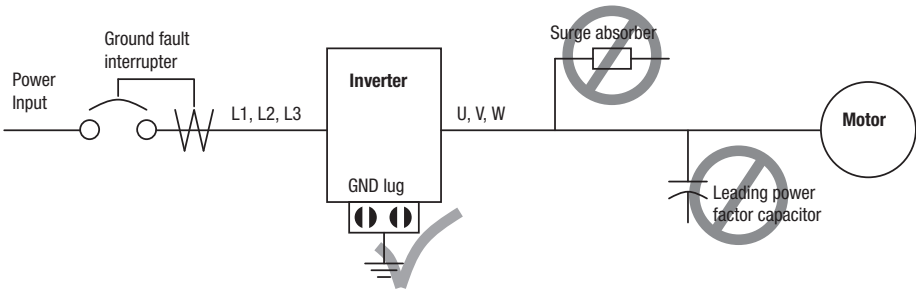

When there has been a sudden power failure while an operation instruction is active, then the unit may restart operation automatically after the power failure has ended. If there is a possibility that such an occurrence may harm humans, then install an electromagnetic contactor (Mgo) on the power supply side, so that the circuit does not allow automatic restarting after the power supply recovers. If the optional remote operator is used and the retry function has been selected, this will also cause automatic restarting when a Run command is active. So, please be careful.

⚠ **Caution** MOTOR TERMINAL SURGE VOLTAGE SUPPRESSION FILTER
(For the 400 V CLASS)

In a system using an inverter with the voltage control PWM system, a voltage surge caused by the cable constants such as the cable length (especially when the distance between the motor and the inverter is 10m or more) and cabling method may occur at the motor terminals. A dedicated filter of the 400 V class for suppressing this voltage surge is available. Be sure to install a filter in this situation.

⚠ **Caution** EFFECTS OF POWER DISTRIBUTION SYSTEM ON INVERTER

In the case below involving a general-purpose inverter, a large peak current can flow on the power supply side, sometimes destroying the converter module:

1. The unbalance factor of the power supply is 3% or higher.
2. the power supply capacity is at least 10 times greater than the inverter capacity (or the power supply capacity is 500 kVA or more).
3. Abrupt power supply changes are expected, due to conditions such as:
   a) Several inverters are interconnected with a short bus.
   b) A thyristor converter and an inverter are interconnected with a short bus.
   c) An installed phase advance capacitor opens and closes.

Where these conditions exist or when the connected equipment must be highly reliable, you MUST install an input side AC-reactor of 3% (at a voltage drop at rated current) with respect to the supply voltage on the power supply side. Also, where the effects of an indirect lightening strike are possible, install a lightening conductor.

⚠ **Caution** SUPPRESSION FOR NOISE INTERFERENCE FROM INVERTER

The inverter uses many semiconductor switching elements such as transistors and IGBTs. Thus, a radio receiver or measuring instrument located near the inverter is susceptible to noise interference.

To protect the instruments from erroneous operation due to noise interference, they should be used well away from the inverter. It is also effective to shield the whole inverter structure.

The addition of an EMI filter on the input side of the inverter also reduces the effect of noise from the commercial power line on external devices.

Note that the external dispersion of noise from the power line can be minimized by connecting an EMI filter on the primary side of the inverter.

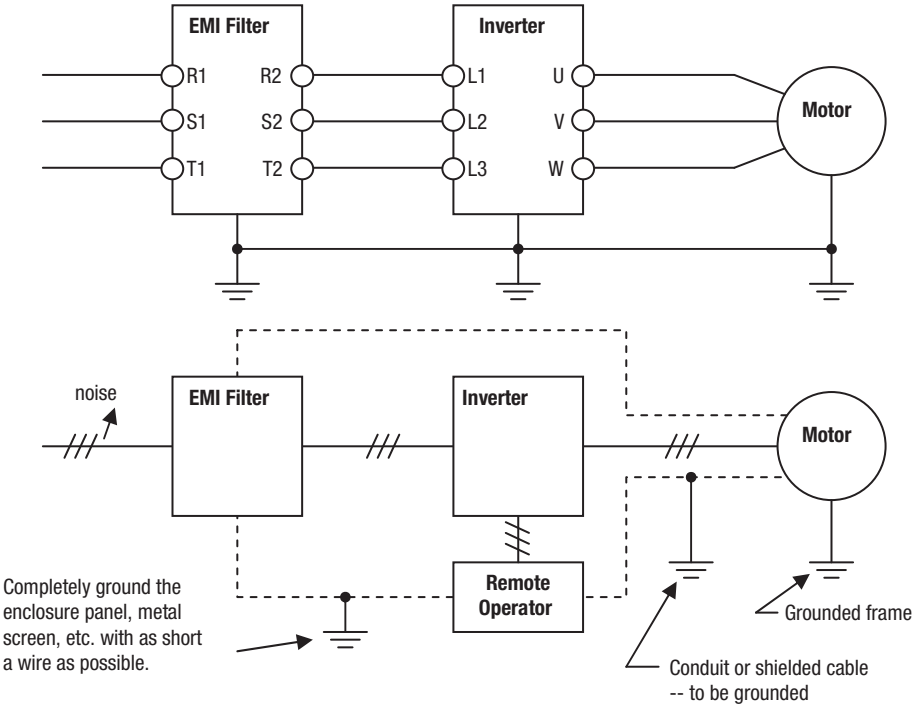

⚠ **Caution** When the EEPROM error E08 occurs, be sure to confirm the setting values again.

⚠ **Caution** When using normally closed active state settings (C011 to C017) for externally commanded Forward or Reverse terminals [FW] or [RV], the inverter may start automatically when the external system is powered OFF or disconnected from the inverter! So do not use normally closed active state settings for Forward or Reverse terminals [FW] or [RV] unless your system design protects against unintended motor operation.

⚠ **Caution** In all the instrumentations in this manual, covers and safety devices are occasionally removed to describe the details. While operating the product, make sure that the covers and safety devices are placed as they were specified originally and operate it according to the instruction manual.

⚠ **Caution** Do not discard the inverter with household waste. Contact an industrial waste management company in your area who can treat industrial waste without polluting the environment.

5 Precautions for Safe Use

Installation and Storage

Do not store or use the product in the following places.

- Locations subject to direct sunlight.
- Locations subject to ambient temperature exceeding the specifications.
- Locations subject to relative humidity exceeding the specifications.
- Locations subject to condensation due to severe temperature fluctuations.
- Locations subject to corrosive or flammable gases.
- Locations subject to exposure to combustibles.
- Locations subject to dust (especially iron dust) or salts.
- Locations subject to exposure to water, oil, or chemicals.
- Locations subject to shock or vibration.

Transporting, Installation and Wiring

- Do not drop or apply strong impact on the product. Doing so may result in damaged parts or malfunction.
- Do not hold by the front cover and terminal block cover, but hold by the fins during transportation.
- Do not connect an AC power supply voltage to the control input/output terminals. Doing so may result in damage to the product.
- Be sure to tighten the screws on the terminal block securely. Wiring work must be done after installing the unit body.
- Do not connect any load other than a three-phase inductive motor to the U, V, and W output terminals.
- Take sufficient shielding measures when using the product in the following locations. Not doing so may result in damage to the product.

  Locations subject to static electricity or other forms of noise.
  Locations subject to strong magnetic fields.
  Locations close to power lines.

Operation and Adjustment

- Be sure to confirm the permissible range of motors and machines before operation because the inverter speed can be changed easily from low to high.
- Provide a separate holding brake if necessary.
- If the Drive Programming stops during multi-function output, the output status is held. Take safety precautions such as stopping peripheral devices.
- If the clock command is used in Drive Programming, an unexpected operation may occur due to weak battery. Take measures such as detecting a weak battery by a check that the clock data returns to the initial setting and stopping the inverter

or programs. When the LCD Digital Operator is removed or disconnected, Drive Programming is in a waiting status by the clock command.

Maintenance and Inspection

- Be sure to confirm safety before conducting maintenance, inspection or parts replacement.
- The capacitor service life is influenced by the ambient temperature. Refer to “Smoothing Capacitor Life Curve” described in the manual. When a capacitor reaches the end of its service life and does not work as the product, you need to replace the capacitor.
- When disposing of LCD digital operators and wasted batteries, follow the applicable ordinances of your local government. When disposing of the battery, insulate it using tape.





The following display must be indicated when products using lithium primary batteries (with more than 6 ppb of perchlorate) are transport to or through the State of California, USA.

Perchlorate Material - special handling may apply.
See www.dtsc.ca.gov/hazardouswaste/perchlorate

The 3G3AX-OP05 has the lithium primary battery (with more than 6 ppb of perchlorate).
Label or mark the above display on the exterior of all outer shipping packages of your products when exporting your products which the 3G3AX-OP05 are installed to the State of California, USA.

- Do not short + and –, charge, disassemble, heat, put into the fire, or apply strong impact on the battery. The battery may leak, explode, produce heat or fire. Never use the battery which was applied strong impact due to such as fall on the floor, it may leak.
- UL standards establish that the battery shall be replaced by an expert engineer. The expert engineer must be in charge of the replacement and also replace the battery according to the method described in this manual.
- When the display of LCD Digital Operator can not be recognized due to the service life, replace the LCD Digital Operator.

6 UL® Cautions, Warnings and Instructions

Warnings and Cautions for Troubleshooting and Maintenance

The warnings and instructions in this section summarizes the procedures necessary to ensure an inverter installation complies with Underwriters Laboratories guidelines.

⚠ **WARNING** Use 60/75 C Cu wire only. (for models: 3G3MX2-A2001, -A2002, -A2004, -A2007, -AB015, -AB022, -A4004, -A4007, -A4015, -A4022, -A4030)

⚠ **WARNING** Use 75 C Cu wire only. (for models: 3G3MX2-AB001, -AB002, -AB004, -AB007, -A2015, -A2022, -A2037, -A2055, -A2075, -A2110, -A2150, -A4040, -A4055, -A4075, -A4110 and -A4150)

⚠ **WARNING** Suitable for use on a circuit capable of delivering not more than 100,000 rms Symmetrical Amperes, 240 or 480V maximum.

⚠ **WARNING** When protected by CC, G, J, or R class Fuses, or when Protected By A Circuit Breaker Having An Interrupting Rating Not Less Than 100,000 rms Symmetrical Amperes, 240 or 480 Volts Maximum.

⚠ **WARNING** Install device in pollution degree 2 environment.

⚠ **WARNING** Maximum Surrounding Air Temperature 50°C

⚠ **WARNING** Solid state motor overload protection is provided in each model

⚠ **WARNING** Integral solid state short circuit protection does not provide branch circuit protection. Branch circuit protection must be provided in accordance with the National Electric Code and any additional local codes

Terminal symbols and Screw size

Inverter Model	Screw Size	Required Torque (N-m)	Wire range
3G3MX2-AB001, 3G3MX2-AB002, 3G3MX2-AB004	M4	1.0	AWG16 (1.3mm^2)
3G3MX2-AB007	M4	1.4	AWG12 (3.3mm^2)
3G3MX2-AB015, 3G3MX2-AB022	M4	1.4	AWG10 (5.3mm^2)
3G3MX2-A2001, 3G3MX2-A2002, 3G3MX2-A2004, 3G3MX2-A2007	M4	1.0	AWG16 (1.3mm^2)
3G3MX2-A2015	M4	1.4	AWG14 (2.1mm^2)
3G3MX2-A2022	M4	1.4	AWG12 (3.3mm^2)
3G3MX2-A2037	M4	1.4	AWG10 (5.3mm^2)
3G3MX2-A2055, 3G3MX2-A2075	M5	3.0	AWG6 (13mm^2)
3G3MX2-A2110	M6	5.9 to 8.8	AWG4 (21mm^2)
3G3MX2-A2150	M8	5.9 to 8.8	AWG2 (34mm^2)
3G3MX2-A4004, 3G3MX2-A4007, 3G3MX2-A4015	M4	1.4	AWG16 (1.3mm^2)
3G3MX2-A4022, 3G3MX2-A4030	M4	1.4	AWG14 (2.1mm^2)
3G3MX2-A4040	M4	1.4	AWG12 (3.3mm^2)
3G3MX2-A4055, 3G3MX2-A4075	M5	3.0	AWG10 (5.3mm^2)
3G3MX2-A4110, 3G3MX2-A4150	M6	5.9 to 8.8	AWG6 (13mm^2)

7 Fuse Sizes

The inverter shall be connected with a UL Listed Cartridge Nonrenewable fuse, rated 600Vac with the current ratings as shown in the table below.

Inverter Model	Type	Rating
3G3MX2-AB001, 3G3MX2-AB002, 3G3MX2-AB004	Class J	10A, AIC 200kA
3G3MX2-AB007		15A, AIC 200kA
3G3MX2-AB015		20A, AIC 200kA
3G3MX2-AB022		30A, AIC 200kA
3G3MX2-A2001, 3G3MX2-A2002, 3G3MX2-A2004		10A, AIC 200kA
3G3MX2-A2007, 3G3MX2-A2015		15A, AIC 200kA
3G3MX2-A2022		20A, AIC 200kA
3G3MX2-A2037, 3G3MX2-A2055		30A, AIC 200kA
3G3MX2-A2075		40A, AIC 200kA
3G3MX2-A2110, 3G3MX2-A2150		80A, AIC 200kA
3G3MX2-A4004, 3G3MX2-A4007, 3G3MX2-A4015, 3G3MX2-A4022		10A, AIC 200kA
3G3MX2-A4030, 3G3MX2-A4040		15A, AIC 200kA
3G3MX2-A4055, 3G3MX2-A4075		20A, AIC 200kA
3G3MX2-A4110		30A, AIC 200kA
3G3MX2-A4150		40A, AIC 200kA

8 Revision History

A manual revision history appears as a suffix to the catalogue number located at the lower left of the front and back covers.

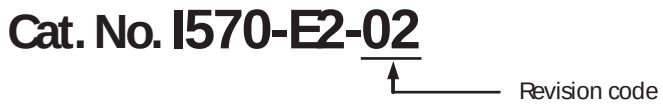

Revision code	Revision date	Description
01	2009	First version
02	January 2013	Second version New functionality and IP54 models

SECTION 1
Getting Started

1-1 Introduction

1-1-1 Main Features

Congratulation on your purchase of an MX2 Series Omron inverter! This inverter drive features state-of-the-art circuitry and components to provide high performance. The housing footprint is exceptionally small, given the size of the corresponding motor. The Omron MX2 product line includes more than a dozen inverter models to cover motor sizes from 1/8 horsepower to 20 horsepower, in either 240 VAC or 480 VAC power input versions.

The main features are:

- 200 V and 400 V class, 0.1 to 15 kW inverters having dual rating
- Drive programming function integrated
- Built-in RS485 MODBUS RTU as standard, other FieldBus optional
- New current suppressing function
- Sixteen programmable speed levels
- PID control adjusts motor speed automatically to maintain a process variable value
- Password protection to avoid unexpected parameter change

Additionally the products produced in November 09 or later includes these new features:

- Permanent magnet motor control
- 5 line LCD support with Read and Write capability (Copy function) and Real Time Clock Trip History

The design in Omron inverters overcomes many of the traditional trade-offs between speed, torque and efficiency. The performance characteristics are:

- High starting torque of 200% at 0.5 Hz
- Continuous operation at 100% torque within a 1:10 speed range (6/60 Hz/ 5/50 Hz) without motor derating.
- Fan has ON/OFF selection to provide longer life for cooling fan.

A full line of accessories from Omron is available to complete your motor application:

- Integrated USB port for PC communication
- Digital remote operator keypad
- Integrated brake chopper
- EMC filter (footprint type C1) optional

1-1-2 Inverter Specification Label

The Omron MX2 inverters have product labels located on the right side of the housing, as pictured below. Be sure to verify that the specifications on the labels match your power source, and application safety requirements.



The model number for a specific inverter contains useful information about its operating characteristics. Refer to the model number legend below:

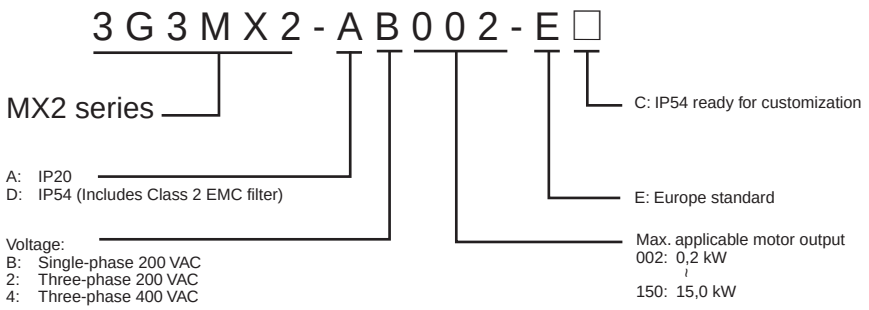

1-2 MX2 Inverter Specifications

1-2-1 Model-specific tables for 200 V and 400 V class inverters

The following tables are specific to MX2 inverters for the 200 V and 400 V class model groups. Note that *General Specifications* on page 7 in this chapter apply to both voltage class groups. Footnotes for all specification tables follow the table below.

Item			Single-phase 200 V class Specifications					
3G3MX2 inverters, 200 V models			AB001	AB002	AB004F	AB007	AB015	AB022
Applicable motor size *2	kW	VT	0.2	0.4	0.55	1.1	2.2	3.0
		CT	0.1	0.2	0.4	0.75	1.5	2.2
	HP	VT	1/4	1/2	3/4	1.5	3	4
		CT	1/8	1/4	1/2	1	2	3
Rated capacity (kVA)	200 V	VT	0.4	0.6	1.2	2.0	3.3	4.1
		CT	0.2	0.5	1.0	1.7	2.7	3.8
	240 V	VT	0.4	0.7	1.4	2.4	3.9	4.9
		CT	0.3	0.6	1.2	2.0	3.3	4.5
Loss at 100% load		W	12	22	30	48	79	104
Efficiency at rated load		%	89.5	90	93	94	95	95.5
Rated input voltage			Single-phase: 200 V-15% to 240 V+10%, 50/60 Hz±5%					
Rated output voltage *3			3-phase: 200 to 240 V (proportional to input voltage)					
Rated output current (A)		VT	1.2	1.9	3.5	6.0	9.6	12.0
		CT	1.0	1.6	3.0	5.0	8.0	11.0
Starting torque *6			200% at 0.5 Hz					
Braking	Without resistor		100%: ≤50 Hz 50%: ≤60 Hz				70%: ≤50 Hz 50%: ≤60 Hz	20%: ≤50 Hz 20%: ≤60 Hz
	With resistor		150%					100%
DC braking			Variable operating frequency, time, and braking force					
Weight		kg	1.0	1.0	1.1	1.4	1.8	1.8
		lb	2.2	2.2	2.4	3.1	4.0	4.0

Footnotes for the preceding table and the tables that follow:

Note 1 The protection method conforms to JEM 1030.

Note 2 The applicable motor refers to a standard 3-phase motor (4p). When using other motors, care must be taken to prevent the rated motor current (50/60 Hz) from exceeding the rated output current of the inverter.

Note 3 The output voltage decreases as the main supply voltage decreases (except when using the AVR function). In any case, the output voltage cannot exceed the input power supply voltage.

Note 4 To operate the motor beyond 50/60 Hz, consult the motor manufacturer for the maximum allowable rotation speed.

Note 5 For achieving approved input voltage rating categories:

- 460 to 480 VAC - Over-voltage category 2
- 380 to 460 VAC - Over-voltage category 3

To meet the Over-voltage category 3, insert an EN or IEC standard compliant isolation transformer that is earth grounded and star connected (for Low Voltage Directive).

Note 6 At the rated voltage when using a standard 3-phase, 4-pole motor.

Note 7 The braking torque via capacitive feedback is the average deceleration torque at the shortest deceleration (stopping from 50/60 Hz as indicated). It is not continuous regenerative braking torque. The average deceleration torque varies with motor loss. This value decreases when operating beyond 50 Hz. If a large regenerative torque is required, the optional regenerative braking unit and a resistor should be used.

Note 8 The frequency command is the maximum frequency at 9.8 V for input voltage 0 to 10 VDC, or at 19.6 mA for input current 4 to 20 mA. If this characteristic is not satisfactory for your application, contact your Omron representative.

Note 9 If the inverter is operated outside the region shown in the graph in the derating curve, the inverter may be damaged or its service life may be shortened. Set b083 Carrier Frequency Adjustment in accordance with the expected output current level. See derating curve section for the detailed information of the inverter operating range.

Note 10 The storage temperature refers to the short-term temperature during transportation.

Note 11 Conforms to the test method specified in JIS C0040 (1999). For the model types excluded in the standard specifications, contact your Omron sales representative.

Note 12 Watt losses are calculated values based on specification of main semi-conductors. You must take suitable margin when designing cabinet based on these values. Otherwise there is a possibility of heating trouble.

Item			Three-phase 200V class Specifications					
3G3MX2 inverters, 200 V models			A2001	A2002	A2004	A2007	A2015	A2022
Applicable motor size *2	kW	VT	0.2	0.4	0.75	1.1	2.2	3.0
		CT	0.1	0.2	0.4	0.75	1.5	2.2
	HP	VT	1/4	1/2	1	1.5	3	4
		CT	1/8	1/4	1/2	1	2	3
Rated capacity (kVA)	200 V	VT	0.4	0.6	1.2	2.0	3.3	4.1
		CT	0.2	0.5	1.0	1.7	2.7	3.8
	240 V	VT	0.4	0.7	1.4	2.4	3.9	4.9
		CT	0.3	0.6	1.2	2.0	3.3	4.5
Loss at 100% load		W	12	22	30	48	79	104
Efficiency at rated load		%	89.5	90	93	94	95	95.5
Rated input voltage			Three-phase: 200 V-15% to 240 V+10%, 50/60 Hz±5%					
Rated output voltage *3			Three-phase: 200 to 240 V (proportional to input voltage)					
Rated output current (A)		VT	1.2	1.9	3.5	6.0	9.6	12.0
		CT	1.0	1.6	3.0	5.0	8.0	11.0
Starting torque *6			200% at 0.5 Hz					
Braking	Without resistor		100%: ≤50 Hz 50%: ≤60 Hz				70%: ≤50 Hz 50%: ≤60 Hz	
	With resistor		150%					
DC braking			Variable operating frequency, time, and braking force					
Weight		kg	1.0	1.0	1.1	1.2	1.6	1.8
		lb	2.2	2.2	2.4	2.6	3.5	4.0

Item			Three-phase 200V class Specifications				
3G3MX2 inverters, 200 V models			A2037	A2055	A2075	A2110	A2150
Applicable motor size *2	kW	VT	5.5	7.5	11	15	18.5
		CT	3.7	5.5	7.5	11	15
	HP	VT	7.5	10	15	20	25
		CT	5	7.5	10	15	20
Rated capacity (kVA)	200 V	VT	6.7	10.3	13.8	19.3	23.9
		CT	6.0	8.6	11.4	16.2	20.7
	240 V	VT	8.1	12.4	16.6	23.2	28.6
		CT	7.2	10.3	13.7	19.5	24.9
Loss at 100% load		W	154	229	313	458	625
Efficiency at rated load		%	96	96	96	96	96
Rated input voltage			Single-phase: 200 V-15% to 240 V+10%, 50/60 Hz±5%				
Rated output voltage *3			Three-phase: 200 to 240 V (proportional to input voltage)				
Rated output current (A)		VT	19.6	30.0	40.0	56.0	69.0
		CT	17.5	25.0	33.0	47.0	60.0
Starting torque *6			200% at 0.5 Hz				
Braking	Without resistor		100%: ≤50 Hz 50%: ≤60 Hz				70%: ≤50 Hz 50%: ≤60 Hz
	With resistor		150%				
DC braking			Variable operating frequency, time, and braking force				
Weight		kg	2.0	3.3	3.4	5.1	7.4
		lb	4.4	7.3	7.5	11.2	16.3

Item			Three-phase 400V class Specifications					
3G3MX2 inverters, 400 V models			A4004	A4007	A4015	A4022	A4030	A4040
Applicable motor size *2	kW	VT	0.75	1.5	2.2	3.0	4.0	5.5
		CT	0.4	0.75	1.5	2.2	3.0	4.0
	HP	VT	1	2	3	4	5	7.5
		CT	1/2	1	2	3	4	5
Rated capacity (kVA)	380 V	VT	1.3	2.6	3.5	4.5	5.7	7.3
		CT	1.1	2.2	3.1	3.6	4.7	6.0
	480 V	VT	1.7	3.4	4.4	5.7	7.3	9.2
		CT	1.4	2.8	3.9	4.5	5.9	7.6
Loss at 100% load		W	35	56	96	116	125	167
Efficiency at rated load		%	92	93	94	95	96	96
Rated input voltage			Three-phase: 380 V-15% to 480 V+10%, 50/60 Hz±5%					
Rated output voltage *3			Three-phase: 380 to 480 V (proportional to input voltage)					
Rated output current (A)		VT	2.1	4.1	5.4	6.9	8.8	11.1
		CT	1.8	3.4	4.8	5.5	7.2	9.2
Starting torque *6			200% at 0.5 Hz					
Braking	Without resistor		100%: ≤50 Hz 50%: ≤60 Hz				70%: ≤50 Hz 50%: ≤60 Hz	
	With resistor		150%					
DC braking			Variable operating frequency, time, and braking force					
Weight		kg	1.5	1.6	1.8	1.9	1.9	2.1
		lb	3.3	3.5	4.0	4.2	4.2	4.6

Item			Three-phase 400V class Specifications			
3G3MX2 inverters, 400 V models			A4055	A4075	A4110	A4150
Applicable motor size *2	kW	VT	7.5	11	15	18.5
		CT	5.5	7.5	11	15
	HP	VT	10	15	20	25
		CT	7.5	10	15	20
Rated capacity (kVA)	380 V	VT	11.5	15.1	20.4	25.0
		CT	9.7	11.8	15.7	20.4
	480 V	VT	14.5	19.1	25.7	31.5
		CT	12.3	14.9	19.9	25.7
Loss at 100% load		W	229	296	411	528
Efficiency at rated load		%	96	96.2	96.4	96.6
Rated input voltage			Three-phase: 380 V-15% to 480 V+10%, 50/60 Hz±5%			
Rated output voltage *3			Three-phase: 380 to 480 V (proportional to input voltage)			
Rated output current (A)		VT	17.5	23.0	31.0	38.0
		CT	14.8	18.0	24.0	31.0
Starting torque *6			200% at 0.5 Hz			
Braking	Without resistor		100%: ≤50 Hz 50%: ≤60 Hz			
	With resistor		150%			
DC braking			Variable operating frequency, time, and braking force			
Weight		kg	3.5	3.5	4.7	5.2
		lb	7.7	7.7	10.4	11.5

1-2-2 General Specifications

The following table applies to all MX2 inverters.

Item			General Specifications
Protective housing			IP 20
Control method			Sinusoidal Pulse Width Modulation (PWM) control
Carrier frequency			2 kHz to 15 kHz (derating required depending on the model)
Output frequency range			0.1 to 400 Hz
Frequency accuracy			Digital command: 0.01% of the maximum frequency Analog command: 0.2% of the maximum frequency (25°C ±10°C)
Frequency setting resolution			Digital: 0.01 Hz; Analog: max. frequency/400
Volt./Freq. characteristic			V/f control (constant torque, reduced torque, free-V/F): base freq. 30 Hz ~400 Hz ad-justable Sensorless vector control, Closed loop control with motor encoder feed-back: base freq. 30 Hz ~ 400 Hz ad-justable
Overload capacity			Dual rating: CT(Heavy duty) : 60 sec. @150% VT(Normal duty) : 60 sec. @120%
Acceleration/deceleration time			0.01 to 3600 seconds, linear and S-curve accel/decel, second accel/decel setting available
Starting torque			200% @0.5 Hz (sensorless vector control)
Input signal	Freq. setting	Operator panel	Up and Down keys / Value settings
		External signal	0 to 10 VDC (input impedance 10 k Ohms), 4 to 20 mA (input impedance 100 Ohms), Potentiometer (1 k to 2 k Ohms, 2 W)
		Via network	RS485 ModBus RTU, other network option
	FWD/REV run	Operator panel	Run/Stop (Forward/Reverse run change by command)
		External signal	Forward run/stop, Reverse run/stop
		Via network	RS485 ModBus RTU, other network option
	Intelligent input terminal Seven terminals, sink/source changeable by a short bar 68 functions assignable		**FW** (forward run command), **RV** (reverse run command), **CF1~CF4** (multi-stage speed setting), **JG** (jog command), **DB** (external braking), **SET** (set second motor), **2CH** (2-stage accel./decel. command), **FRS** (free run stop command), **EXT** (external trip), **USP** (startup function), **CS** (commercial power switchover), **SFT** (soft lock), **AT** (analog input selection), **RS** (reset), **PTC** (thermistor thermal protection), **STA** (start), **STP** (stop), **F/R** (forward/reverse), **PID** (PID disable), **PIDC** (PID reset), **UP** (remote control up function), **DWN** (remote control down function), **UDC** (remote control data clear), **OPE** (operator control), **SF1~SF7** (multi-stage speed setting; bit operation), **OLR** (overload restriction), **TL** (torque limit enable), **TRQ1** (torque limit changeover1), **TRQ2** (torque limit changeover2), **BOK** (Braking confirmation), **LAC** (LAD cancellation), **PCLR** (position deviation clear), **ADD** (add frequency enable), **F-TM** (force terminal mode), **ATR** (permission of torque command input), **KHC** (Cumulative power clear), **MI1~MI7** (general purpose inputs for Drive Programming), **AHD** (analog command hold), **CP1~CP3** (multistage-position switches), **ORL** (limit signal of zero-return), **ORG** (trigger signal of zero-return), **SPD** (speed/position change-over), **GS1,GS2** (STO inputs, safety related signals), **485** (Starting communication signal), **PRG** (executing Drive Programming), **HLD** (retain output frequency), **ROK** (permission of run command), **EB** (rotation direction detection of B-phase), **DISP** (display limitation), **NO** (no function), **PSET** (preset position)

Item		General Specifications
Output signal	Intelligent output terminal 48 functions assignable	**RUN** (run signal), **FA1~FA5** (frequency arrival signal), **OL,OL2** (overload advance notice signal), **OD** (PID deviation error signal), **AL** (alarm signal), **OTQ** (over/under torque threshold), **UV** (under-voltage), **TRQ** (torque limit signal), **RNT** (run time expired), **ONT** (power ON time expired), **THM** (thermal warning), **BRK** (brake release), **BER** (brake error), **ZS** (0Hz detection), **DSE** (speed deviation excessive), **POK** (positioning completion), **ODc** (analog voltage input disconnection), **OIDc** (analog current input disconnection), **FBV** (PID second stage output), **NDc** (network disconnect detection), **LOG1~LOG3** (Logic output signals), **WAC** (capacitor life warning), **WAF** (cooling fan warning), **FR** (starting contact), **OHF** (heat sink overheat warning), **LOC** (Low load), **MO1~MO3** (general outputs for Drive Programming), **IRDY** (inverter ready), **FWR** (forward operation), **RVR** (reverse operation), **MJA** (major failure), **WCO** (window comparator O), **WCOI** (window comparator OI), **FREF** (frequency command source), **REF** (run command source), **SETM** (second motor in operation), **EDM (STO** (safe torque off) performance monitor), **OP** (option control signal), **NO** (no function)
	Monitor output (analog)	Output freq., output current, output torque, output voltage, input power, thermal load ratio, LAD freq., heat sink temperature, general output (Drive Programming)
	Pulse train output (0~10 Vdc, 32 kHz max.)	**[PWM output]** Output freq., output current, output torque, output voltage, input power, thermal load ratio, LAD freq., heat sink temperature, general output (Drive Programming), **OP** (option control signal) **[Pulse train output]** Output frequency, output current, pulse train input monitor
Alarm output contact		ON for inverter alarm (1c contacts, both normally open or closed available.)
Alarm output contact		ON for inverter alarm (1c contacts, both normally open or closed available.)
Other functions		Free-V/f, manual/automatic torque boost, output voltage gain adjustment, AVR function, reduced voltage start, motor data selection, auto-tuning, motor stabilization control, reverse running protection, simple position control, simple torque control, torque limiting, automatic carrier frequency reduction, energy saving operation, PID function, non-stop operation at instantaneous power failure, brake control, DC injection braking, dynamic braking (BRD), frequency upper and lower limiters, jump frequencies, curve accel and decel (S, U, inversed U,EL-S), 16-stage speed profile, fine adjustment of start frequency, accel and decel stop, process jogging, frequency calculation, frequency addition, 2-stage accel/decel, stop mode selection, start/end freq., analog input filter, window comparators, input terminal response time, output signal delay/hold function, rotation direction restriction, stop key selection, software lock, safe stop function, scaling function, display restriction, password function, user parameter, initialization, initial display selection, cooling fan control, warning, trip retry, frequency pull-in restart, frequency matching, overload restriction, over current restriction, DC bus voltage AVR
Protective function		Over-current, over-voltage, under-voltage, overload, brake resistor overload, CPU error, memory error, external trip, USP error, ground fault detection at power on, temperature error, internal communication error, driver error, thermistor error, brake error, safe stop, overload at low speed, modbus communication error, option error, encoder disconnection, speed excessive, Drive Programming command error, Drive Programming nesting error, Drive Programming execution error, Drive Programming user trip
Operating environment	Temperature	Operating (ambient): -10 to 50°C / Storage: -20 to 65°C **Note:** Some types requires special derating depending on installation conditions and carrier frequency selected. Refer to “1-2-4 Derating Curves” for more information.
	Humidity	20 to 90% humidity (non-condensing)
	Vibration	5.9m/s^2 (0.6G), 10 to 55 Hz
	Location	Altitude 1,000m or less, indoors (no corrosive gasses or dust)
Coating color		Black
Options		Remote operator unit, cables for the units, braking unit, braking resistor, AC reactor, DC reactor, EMC filter, fieldbus

1-2-3 Signal Ratings

Detailed ratings are in .

Signal / Contact	Ratings
Built-in power for inputs	24V DC, 100 mA maximum
Discrete logic inputs	27 VDC maximum
Discrete logic outputs	50 mA maximum ON state current, 27 VDC maximum OFF state voltage
Analog output	10bit / 0 to 10 VDC, 1 mA
Analog input, current	4 to 19.6 mA range, 20 mA nominal
Analog input, voltage	0 to 9.8 VDC range, 10 VDC nominal, input impedance 10 k
+10 V analog reference	10 VDC nominal, 10 mA maximum
Alarm relay contacts	250 VAC, 2.5 A (R load) max., 0.2 A (I load, P.F. = 0.4) max. 100 VAC, 10 mA min 30 VDC, 3.0 A (R load) max., 0.7 A (I load, P.F. = 0.4) max.) 5 VDC, 100 mA min.

1-2-4 Derating Curves

The maximum available inverter current output is limited by the carrier frequency and ambient temperature. Choosing a higher carrier frequency tends to decrease audible noise, but it also increases the internal heating of the inverter, thus decreasing (derating) the maximum current output capability. Ambient temperature is the temperature just outside the inverter housing such as inside the control cabinet where the inverter is mounted. A higher ambient temperature decreases (derates) the inverter's maximum current output capacity.

An inverter up to 4.0 kW may be mounted individually in an enclosure or side-by-side with other inverter(s) as shown below. Side-by-side mounting causes greater derating than mounting inverters separately. Graphs for either mounting methods are included in this section. Refer to *Installation Environment clearance* on page 31 for minimum clearance dimensions for both mounting configurations.

Individual mounting

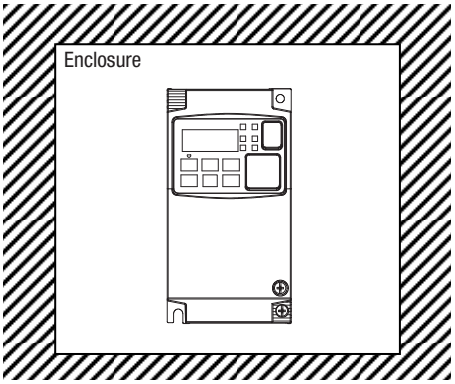

Side-by-side mounting

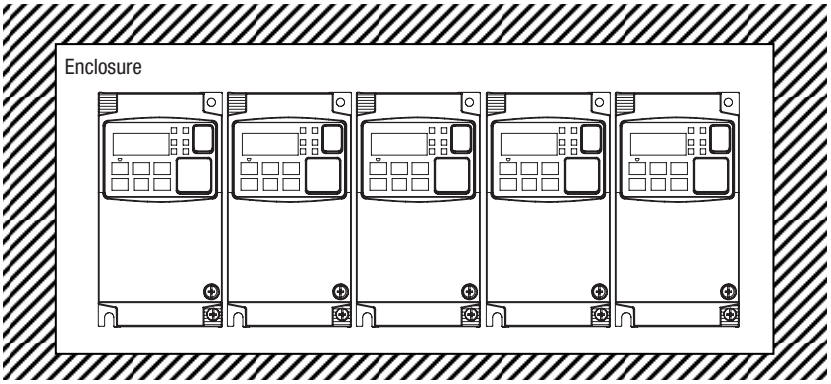

The following table shows which models need derating.

1-ph 200V class	Derating	3-ph 200V class	Derating	3-ph 400V class	Derating
3G3MX2-AB001	–	3G3MX2-A2001	–	3G3MX2-A4004	–
3G3MX2-AB002	–	3G3MX2-A2002	O	3G3MX2-A4007	O
3G3MX2-AB004	O	3G3MX2-A2004	O	3G3MX2-A4015	–
3G3MX2-AB007	–	3G3MX2-A2007	–	3G3MX2-A4022	–
3G3MX2-AB015	–	3G3MX2-A2015	–	3G3MX2-A4030	–
3G3MX2-AB022	–	3G3MX2-A2022	–	3G3MX2-A4040	O
–	–	3G3MX2-A2037	O	3G3MX2-A4055	–
–	–	3G3MX2-A2055	–	3G3MX2-A4075	O
–	–	3G3MX2-A2075	O	3G3MX2-A4110	O
–	–	3G3MX2-A2110	O	3G3MX2-A4150	O
–	–	3G3MX2-A2150	O	–	–

Note O: Need derating
– : Need no derating

Use the following derating curves to help determine the optimal carrier frequency setting for your inverter and find the output current derating. Be sure to use the proper curve for your particular MX2 inverter model number.

Legend for Graphs:

Ambient temperature 40°C max., individual mounting

Ambient temperature 50°C max., individual mounting

Ambient temperature 40°C max., side-by-side mounting

Derating curves

:

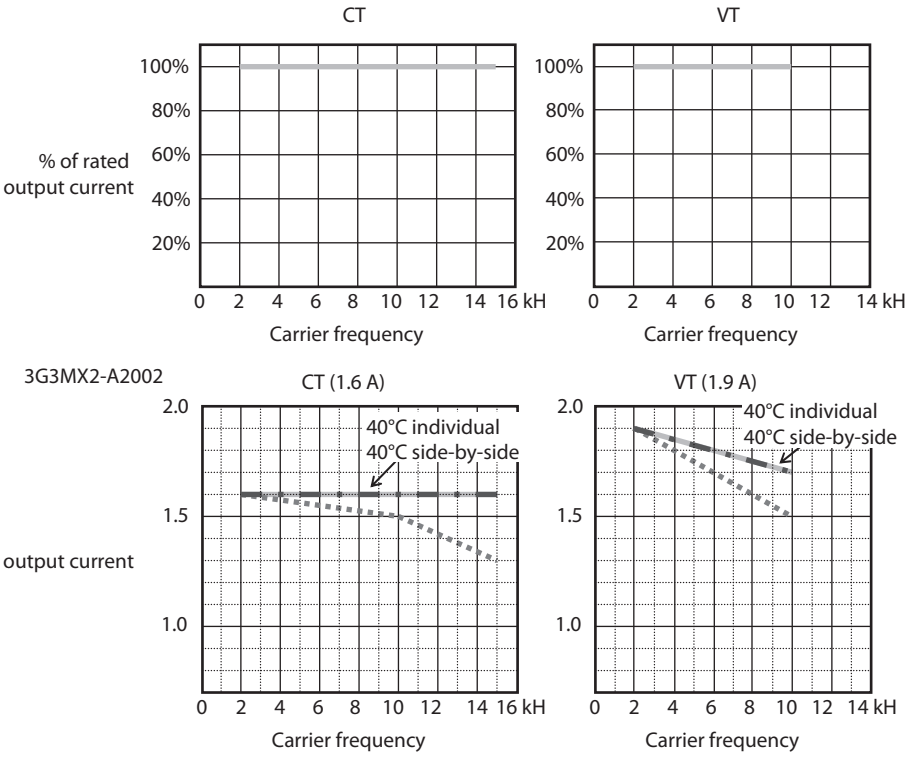

3G3MX2-AB004

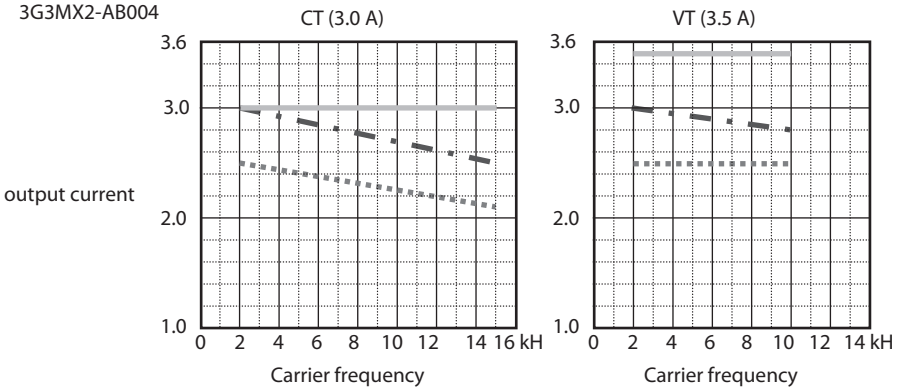

3G3MX2-A2004

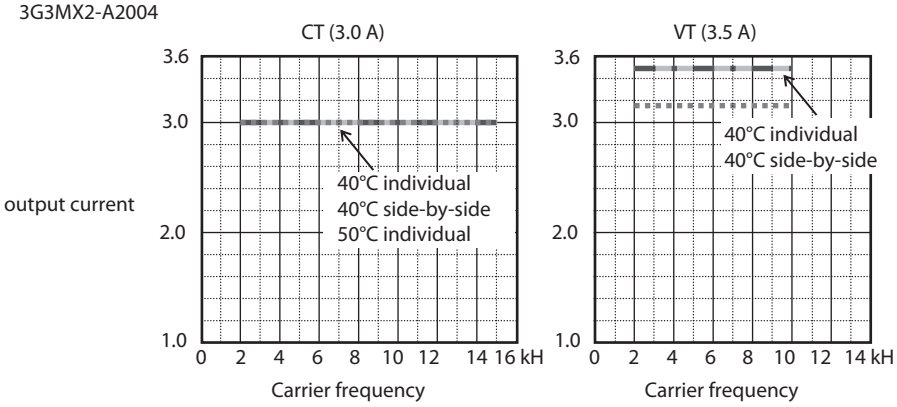

3G3MX2-A4007

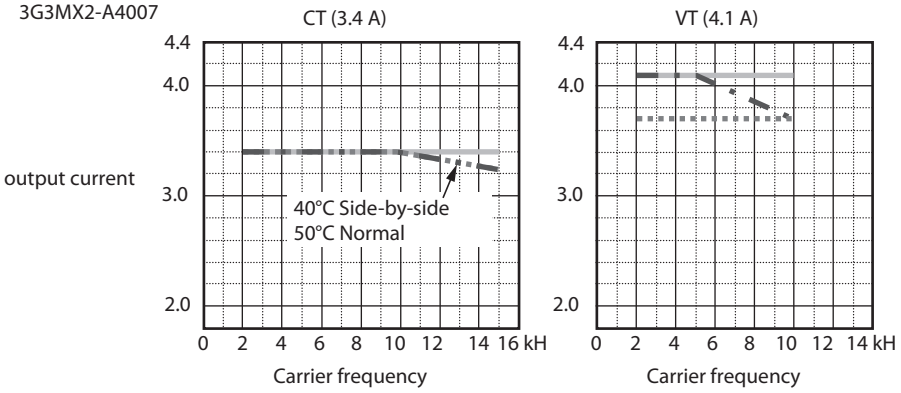

3G3MX2-A2037

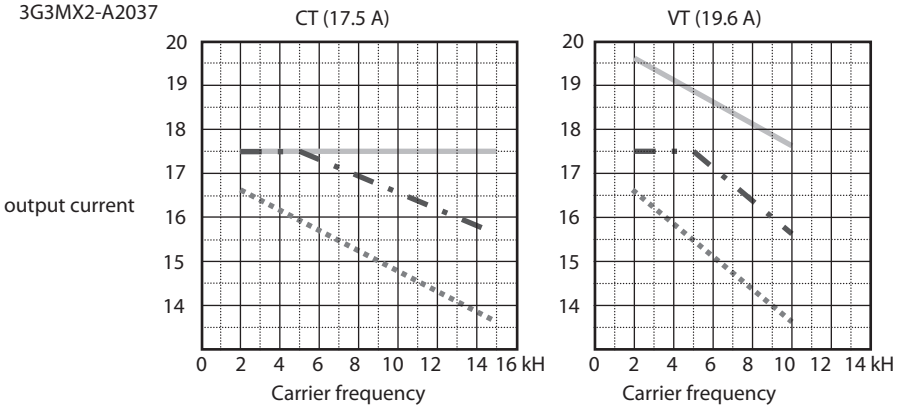

3G3MX2-A4040

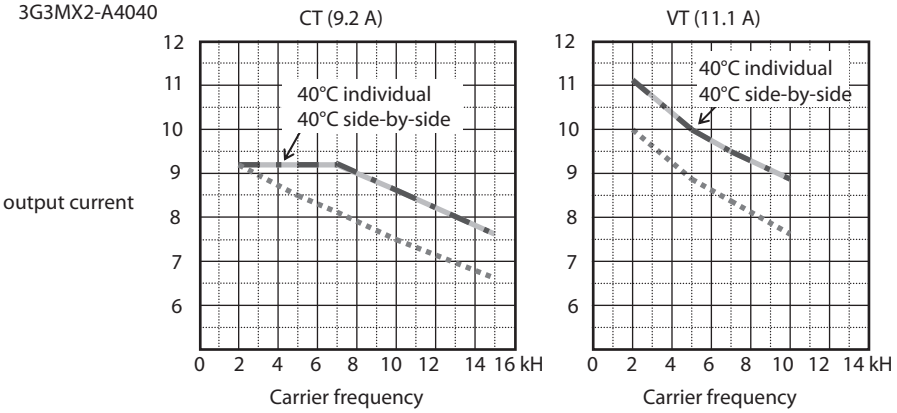

3G3MX2-A2075

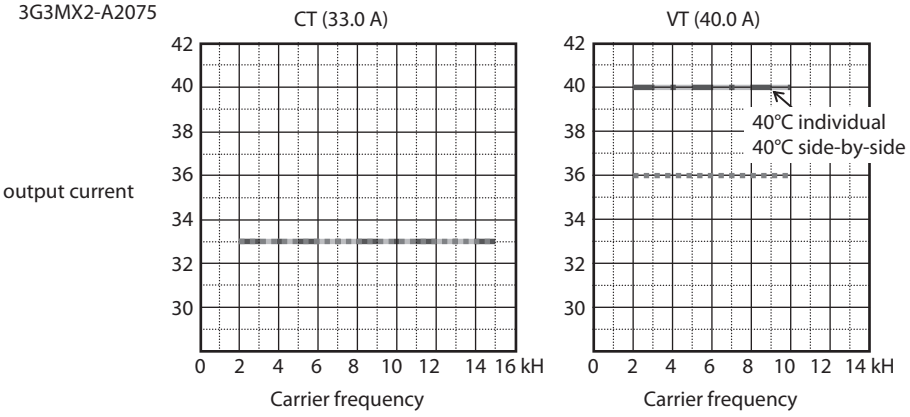

3G3MX2-A4075

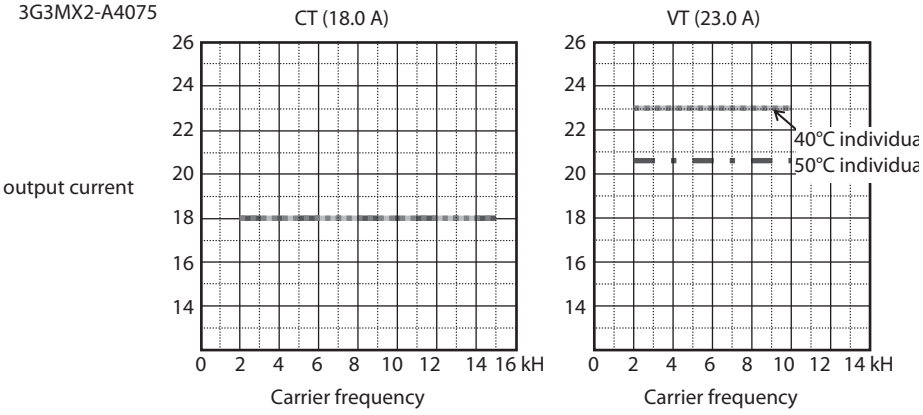

3G3MX2-A2110

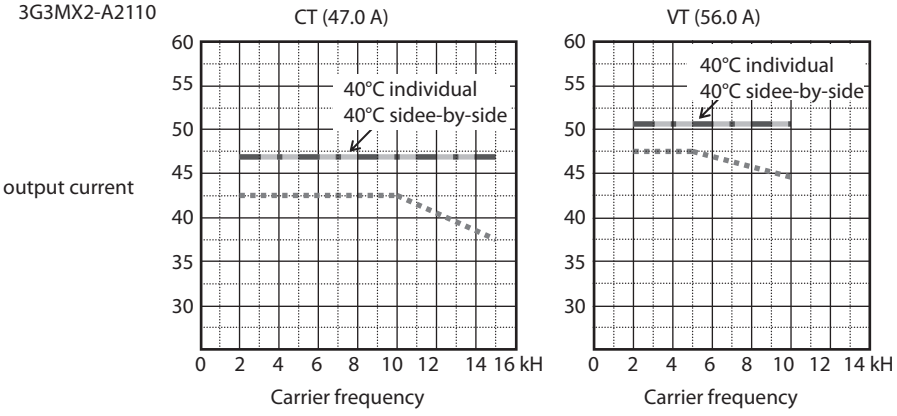

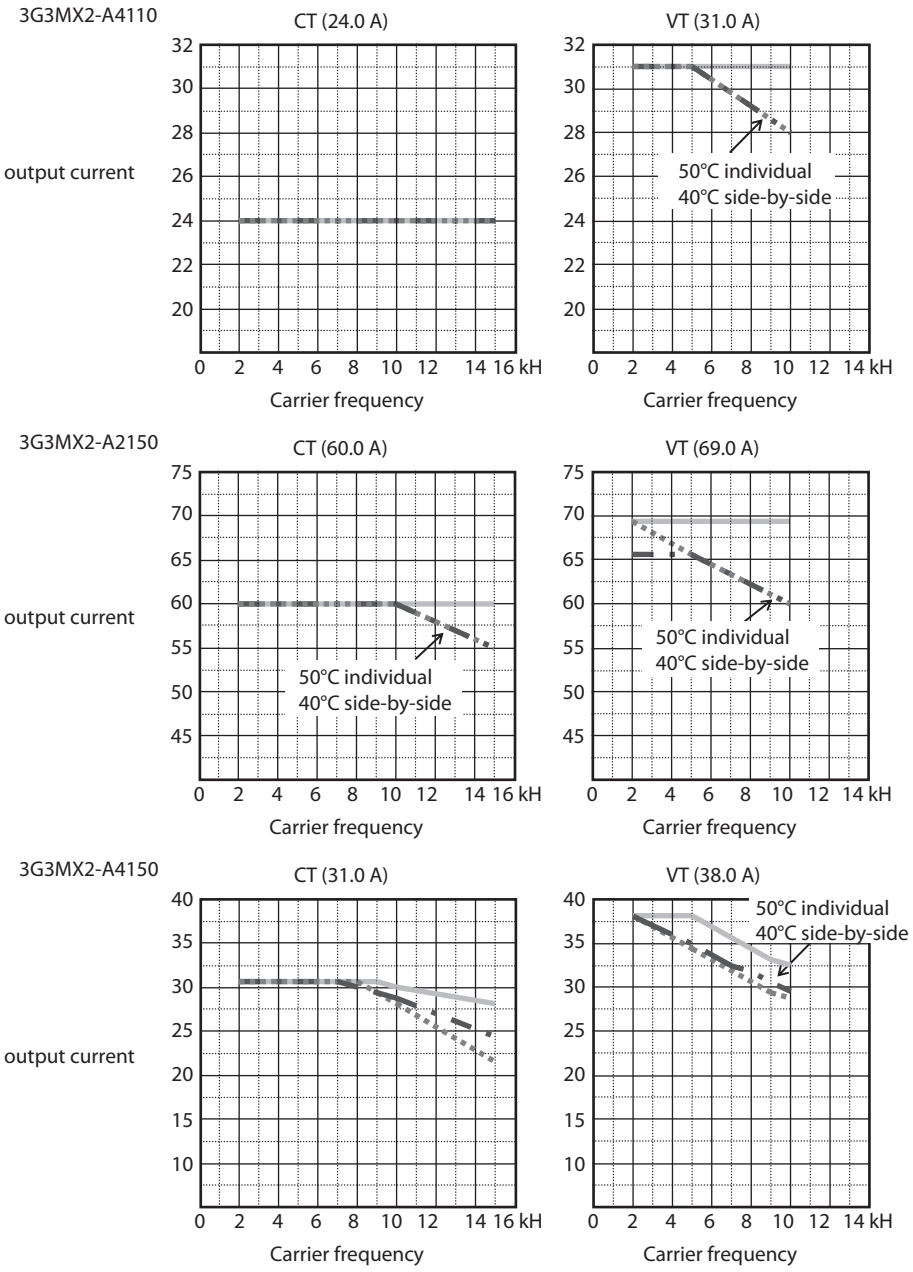

Ambient Temperature Derating Curves (IP54)

For 11 kW and 15 kW MX2 inverters, the carrier frequency must be limited to 2 kHz maximum.

For all other MX2 inverter models, the curves for individual mounting (ambient temperature 40°C max) are applicable.

1-3 Introduction to Variable-Frequency Drives

1-3-1 The Purpose of Motor Speed Control for Industry

Omron inverters provide speed control for 3-phase AC induction motors. You connect AC power to the inverter, and connect the inverter to the motor. Many applications benefit from a motor with variable speed, in several ways:

- Energy savings - HVAC
- Need to coordinate speed with an adjacent process - textile and printing presses
- Need to control acceleration and deceleration (torque)
- Sensitive loads - elevators, food processing, pharmaceuticals

1-3-2 What is an Inverter

The term *inverter* and *variable-frequency drive* are related and somewhat interchangeable. An electronic motor drive for an AC motor can control the motor's speed by *varying the frequency* of the power sent to the motor.

An inverter, in general, is a device that converts DC power to AC power. The figure below shows how the variable-frequency drive employs an internal inverter. The drive first converts incoming AC power to DC through a rectifier bridge, creating an internal DC bus voltage. Then the inverter circuit converts the DC back to AC again to power the motor. The special inverter can vary its output frequency and voltage according to the desired motor speed.

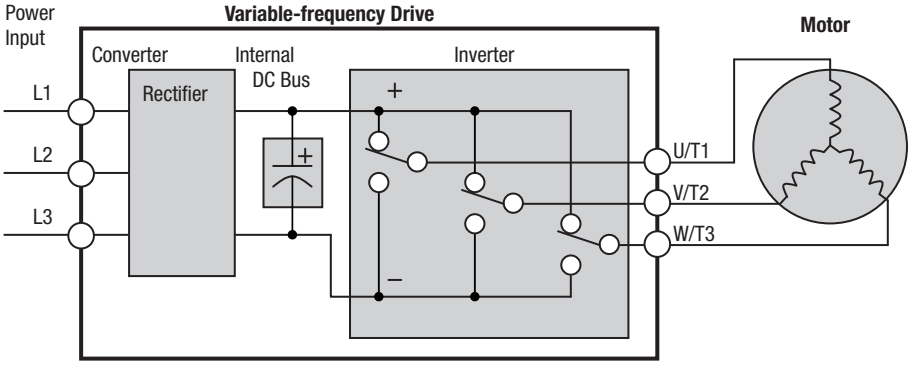

The simplified drawing of the inverter shows three double-throw switches. In Omron inverters, the switches are actually IGBTs (insulated gate bipolar transistors). Using a commutation algorithm, the microprocessor in the drive switches the IGBTs on and off at a very high speed to create the desired output waveforms. The inductance of the motor windings helps smooth out the pulses.

1-3-3 Torque and Constant Volts/Hertz Operation

In the past, AC variable speed drives used an open loop (scalar) technique to control speed. The constant-volts-hertz operation maintains a constant ratio between the applied voltage and the applied frequency. With these conditions, AC induction motors inherently delivered constant torque across the operating speed range. For some applications, this scalar technique was adequate.

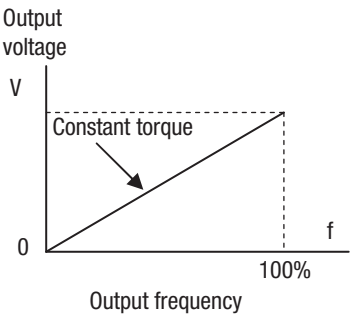

Today, with the advent of sophisticated microprocessors and digital signal processors (DSPs), it is possible to control the speed and torque of AC induction motors with unprecedented accuracy. The MX2 utilizes these devices to perform complex mathematical calculations required to achieve superior performance. You can choose various torque curves to fit the needs of your application. Constant torque applies the same torque level across the frequency (speed) range. Variable torque, also called reduced torque, lowers the torque delivered at mid-level frequencies. A torque boost setting will add additional torque in the lower half of the frequency range for the constant and variable torque curves. With the free-setting torque curve feature, you can specify a series of data points that will define a custom torque curve to fit your application.

1-3-4 Inverter Input and Three-phase Power

The Omron MX2 Series of inverters includes two sub-groups: the 200 V class and the 400V class inverters. The drive described in this manual may be used in either the United States or Europe, although the exact voltage level for commercial power may be slightly different from country to country. Accordingly, a 200 V class inverter requires (nominal) 200 to 240 VAC, and 400 V class inverter requires from 380 to 480 VAC.

The 200 V class inverters MX2-B accept single-phase 200 V class input voltage, those MX2-2 three-phase power only. All 400 V class inverters require three-phase power supply.

⚠ **Tip** If your application only has single phase power available, refer to MX2 inverter of 3HP or less; they can accept single phase input power. Note: Larger models may be able to accept single-phase with derating. Contact your Omron distributor for assistance.

The common terminology for single phase power is line (L) and Neutral (N). Three-phase power connections are usually labeled Line 1 [R/L1], Line 2 [S/L2] and Line 3 [T/L3]. In any case, the power source should include an earth ground connection. That ground connection will need to connect to the inverter chassis and to the motor frame (see "*Wire the Inverter Output to Motor*" in section 2-3-12 (page 51) and "*Inverter output terminal (U/T1, V/T2, W/T3)*" in section 2-3-9 (page 47)).

1-3-5 Inverter Output to the Motor

The AC motor must be connected only to the inverter's output terminals. The output terminals are uniquely labeled (to differentiate them from the input terminals) with the designations U/T1, V/T2, and W/T3. This corresponds to typical motor lead connection designations T1, T2, and T3. It is often not necessary to connect a particular motor lead for a new application. The consequence of swapping any two of the three connections is the reversal of the motor direction. In applications where reversed rotation could cause equipment damage or personnel injury, be sure to verify direction of rotation before attempting full-speed operation.

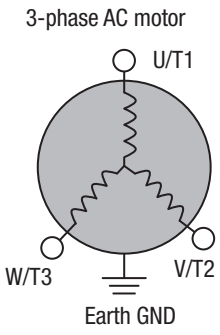

For safety to personnel, you must connect the motor chassis ground to the ground connection at the bottom of the inverter housing.

Notice the three connections to the motor do not include one marked "Neutral" or "Return". The motor represents a balanced "Y" impedance to the inverter, so there is no need for a separate return. In other words, each of the three "Hot" connections serves also as a return for the other connections, because of their phase relationship.

The Omron inverter is a rugged and reliable device. The intention is for the inverter to assume the role of controlling power to the motor during all normal operations. Therefore, this manual instructs you not to switch off power to the inverter *while the motor is running* (unless it is an emergency stop). Also, do not install or use disconnect switches in the wiring from the inverter to the motor (except thermal disconnect). Of course, safety-related devices such as fuses must be in the design to break power during a malfunction, as required by NEC and local codes.

1-3-6 Intelligent Functions and Parameters

Much of this manual is devoted to describing how to use inverter functions and how to configure inverter parameters. The inverter is micro-processor-controlled, and has many independent functions. The microprocessor has an on-board EEPROM for parameter storage. The inverter's front panel keypad provides access to all functions and parameters, which you can access through other devices as well. The general name for all these devices is the digital operator, integrated operator, or digital operator panel. Chapter 2 will show you how to get a motor running, using a minimal set of function commands or configuring parameters.

The optional read/write programmer will let you read and write inverter EEPROM contents from the programmer. This feature is particularly useful for OEMs who need to duplicate a particular inverter's settings in many other inverters in assembly-line fashion.

1-3-7 Braking

In general, braking is a force that attempts to slow or stop motor rotation. So it is associated with motor deceleration, but may also occur even when the load attempts to drive the motor faster than the desired speed (overhauling). If you need the motor and load to decelerate quicker than their natural deceleration during coasting, we recommend installing a braking resistor. The dynamic braking unit (built into MX2) sends excess motor energy into a resistor to slow the motor and load (See "*Introduction*" in section 5-1 (page 255) and "*Dynamic Braking*" in section 5-3 (page 262) for more information). For loads that continuously overhaul the motor for extended periods of time, the MX2 may not be suitable (contact your Omron distributor).

The inverter parameters include acceleration and deceleration, which you can set to match the needs of the application. For a particular inverter, motor, and load, there will be a range of practically achievable accelerations and decelerations.

1-3-8 Velocity Profiles

The MX2 inverter is capable of sophisticated speed control. A graphical representation of that capability will help you understand and configure the associated parameters. This manual makes use of the velocity profile graph used in industry (shown at right). In the example, acceleration is a ramp to a set speed, and deceleration is a decline to a stop.

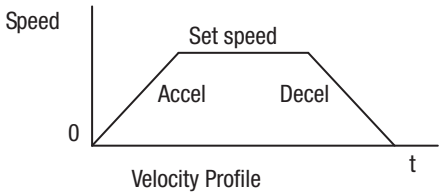

Velocity Profile

Acceleration and deceleration settings specify the time required to go from a stop to maximum frequency (or vise versa). The resulting slope (speed change divided by time) is the acceleration or deceleration. An increase in output frequency uses the acceleration slope, while a decrease uses the deceleration slope. The accel or decel time a particular speed change depends on the starting and ending frequencies.

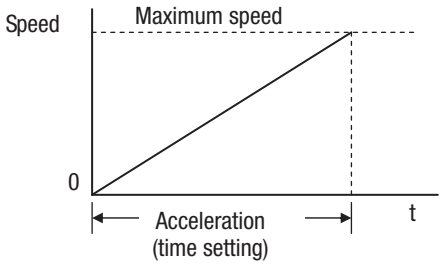

However, the slope is constant, corresponding to the full-scale accel or decel time setting. For example, the full-scale acceleration setting (time) may be 10 seconds - the time required to go from 0 to 60 Hz.

The MX2 inverter can store up to 16 preset speeds. And, it can apply separate acceleration and deceleration transitions from any preset to any other preset speed. A multi-speed profile (shown at right) uses two or more preset speeds, which you can select via intelligent input terminals. This external control can apply any preset speed at any time.

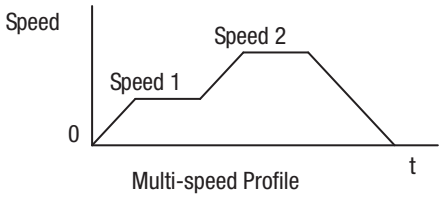

Multi-speed Profile

Alternatively, the selected speed is infinitely variable across the speed range. You can use the potentiometer control on the keypad for manual control. The drive accepts analog 0-10 VDC signals and 4-20 mA control signals as well.

The inverter can drive the motor in either direction. Separate FW and RV commands select the direction of rotation. The motion profile example shows a forward motion followed by a reverse motion of shorter duration. The speed presets and analog signals control the magnitude of the speed, while the FWD and REV commands determine the direction before the motion starts.

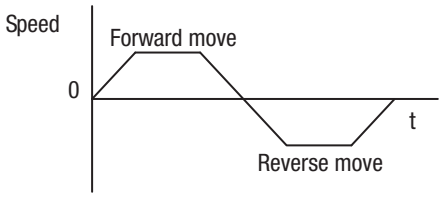

Bi-directional Profile

Note The MX2 can move loads in both directions. However, it is not designed for use in servo-type applications that use a bipolar velocity signal that determines direction.

1-4 Frequently Asked Questions

Q. What is the main advantage in using an inverter to drive a motor, compared to alternative solutions?

A. An inverter can vary the motor speed with very little loss of efficiency, unlike mechanical or hydraulic speed control solutions. The resulting energy savings usually pays for the inverter in a relatively short time.

Q. The term “inverter” is a little confusing, since we also use “drive” and “amplifier” to describe the electronic unit that controls a motor. What does “inverter” mean?

A. The term inverter, drive, and amplifier are used somewhat interchangeably in industry. Nowadays, the term drive, variable-frequency drive, variable-speed drive, and inverter are generally used to describe electronic, microprocessor-based motor speed controllers. In the past, variable-speed drive also referred to various mechanical means to vary speed. Amplifier is a term almost exclusively used to describe drives for servo or stepper motors.

Q. Although the MX2 inverter is a variable speed drive, can I use it in a fixed-speed application?

A. Yes, sometimes an inverter can be used simply as a “soft-start” device, providing controlled acceleration and deceleration to a fixed speed. Other functions of the MX2 may be useful in such applications, as well. However, using a variable speed drive can benefit many types of industrial and commercial motor applications, by providing controlled acceleration and deceleration, high torque at low speeds, and energy savings over alternative solutions.

Q. Can I use an inverter and AC induction motor in a positioning application?

A. That depends on the required precision, and the slowest speed the motor must turn and still deliver torque. The MX2 inverter will deliver full torque while turning the motor at 6Hz (180RPM). DO NOT use an inverter if you need the motor to stop and hold the load position without the aid of a mechanical brake (use a servo or stepper motion control system).

Q. Can the inverter be controlled and monitored via a network?

A. Yes. MX2 inverters have built-in ModBus communications. See Appendix B for more information on network communications.

Q. Why does the manual or other documentation use terminology such as “200 V class” instead of naming the actual voltage, such as “230 VAC”

A. A specific inverter model is set at the factory to work across a voltage range particular to the destination country for that model. The model specifications are on the label on the side of the inverter. A European 200V class inverter (“EU” marking) has different parameter settings than a USA 200 V class.

Q. Why doesn't the motor have a neutral connection as a return to the inverter?

A. The motor theoretically represents a “balanced Y” load if all three stator windings have the same impedance. The Y connection allows each of the three wires to alternatively serve as input or return on alternate half-cycle.

Q. Does the motor need a chassis ground connection?

A. Yes, for several reasons. Most importantly, this provides protection in the event of a short in the motor that puts a hazardous voltage on its housing. Secondly, motors exhibit leakage current that increase with aging. Lastly, a grounded chassis generally emits less electrical noise than an ungrounded one.

Q. What type of motor is compatible with the Omron inverters?

A. Motor type - It must be a three-phase AC induction motor. Use an inverter-grade motor that has at least 800V insulation for 200V class inverters, or 1600V insulation for 400V class.

Motor size - In practice, it's better to find the right size motor for your application; then look for the inverter to match the motor.

Note There may be other factors that will affect motor selection, including heat dissipation, motor operating speed profile, enclosure type, and cooling method.

Q. How many poles should the motor have?

A. Omron inverters can be configured to operate motors with 2, 4, 6, or 8 poles. The greater the number of the poles, the slower the top motor speed will be, but it will have higher torque at the base speed.

Q. Will I be able to add dynamic (resistive) braking to my Omron MX2 drive after the initial installation?

A. Yes, the MX2 inverter already has a dynamic braking circuit built in. Just add the resistor sized to meet the braking requirements. For more information, contact your nearest Omron representative.

Q. How will I know if my application will require resistive braking?

A. For new applications, it may be difficult to tell before you actually test a motor/drive solution. In general, some application can rely on system losses such as friction to serve as the deceleration force, or otherwise can tolerate a long decel time. These applications will not need dynamic braking.

However, applications with a combination of a high-inertia load and a required short decel time will need dynamic braking. This is a physics question that may be answered either empirically or through extensive calculations.

Q. Several options related to electrical noise suppression are available for the Omron inverters. How can I know if my application require any of these options?

A. The purpose of these noise filters is to reduce the inverter electrical noise so the operation of nearby electrical devices is not affected. Some applications are governed by particular regulatory agencies, and noise suppression is mandatory . in those cases, the inverter must have the corresponding noise filter installed. Other applications may not need noise suppression, unless you notice electrical interference with the operation of other devices.

Q. The MX2 features a PID control. PID loops are usually associated with water control, flow control processes, heating, or process industries in general. How could the PID loop feature be useful in my application?

A. You will need to determine the particular main variable in your application the motor affects. That is the process variable (PV) for the motor. Over time, a faster motor speed will cause a faster change in the PV than a slow motor speed will. By using the PID loop feature, the inverter commands the motor to run at the optimal speed required to maintain the PV at the desired value for current conditions. Using the PID loop feature will require an additional sensor and other wiring, and is considered an advanced application.

1-5 International Standards

The 3G3MX2 series inverters meet the following international standards.

Clasification		Applicable standard
EC Directives	Machinery Directive 2006/94/EC	EN ISO13849-1:2008 PLd EN 61800-5-2 EN 60204-1
	Low-voltage directive	EN 61800-5-1
	EMC directive	EN 61800-3
UL		UL508C
		CSA-C22.2 No. 14

Safety functions are supported.

The 3G3MX2 series inverters meet requirements for IEC 60204-1 Stop Category 0 operation and ISO 13849-1 Performance Level PLd of the Machinery Directive.

SECTION 2
Inverter Mounting and Installation

2-1 Orientation to Inverter Features

2-1-1 Unpacking and Inspection

Please take a few moments to unpack your new MX2 inverter and perform these steps:

1. Look for any damage that may have occurred during transportation.
2. Verify the contents of the box.
3. Inspect the specifications label on the side of the inverter. Make sure it matches the product part number you ordered.

2-1-2 Main Physical Features

The MX2 Series inverters vary in size according to the current output rating and motor size for each model number. All feature the same basic Keypad and connector interface for consistent ease of use. The inverter construction has a heat sink at the back of the housing. The larger models include a fan to enhance heat sink performance. The mounting holes are predrilled in the heat sink for your convenience. Smaller models have two mounting holes, while larger ones have four. Be sure to use all the mounting holes provided.

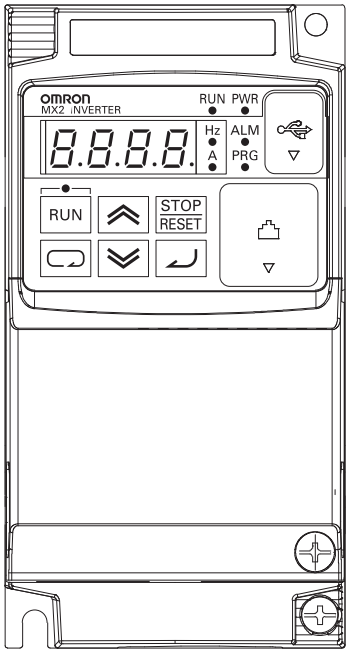

Never touch the heat sink during or just after operation; it can be very hot.

The electronics housing and front panel are built onto the front of the heat sink.

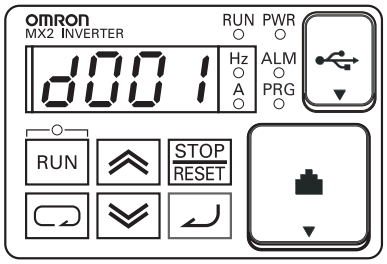

Inverter Keypad - The inverter uses a digital operator interface, or keypad. The four-digit display can show a variety of performance parameters. LEDs indicate whether the display units are Hertz or Amperes. Other LEDs indicate Power (external), and Run/Stop mode and Program/Monitor Mode status. Membrane keys Run and Stop/Reset control monitor operation. The [⮌], [↵], [⏶] and [⏷] keys allow an operator to navigate to the inverter's functions and parameter values. The [↵] key is used when changing a parameter.

Power Wiring Access - First, ensure no power source is connected to the inverter. If power has been connected, verify that the Power LED is OFF and then wait ten minutes after power down to proceed. After removing the terminal cover and front housing cover, the housing partitions that cover the power and motor wiring exits will be able to slide upward as shown below.

Notice the four wire exit slots in the housing partition. This helps keep the power and motor wiring (to the left) separated from the signal-level logic or analog wiring (to the right).

Remove the housing partition and as shown as set them aside in a secure place while wiring. Be sure to replace them afterward. Never operate the inverter with the partition removed or the front housing cover removed.

The power input and motor 3-phase wiring connect to the lower row of the terminals. The upper row of power terminals connect to optional braking units or DC link choke.

The following section in this chapter will describe system design and guide you through a step-by-step installation process. After the section on wiring, this chapter will show how to use the front panel keys to access functions and edit parameters.

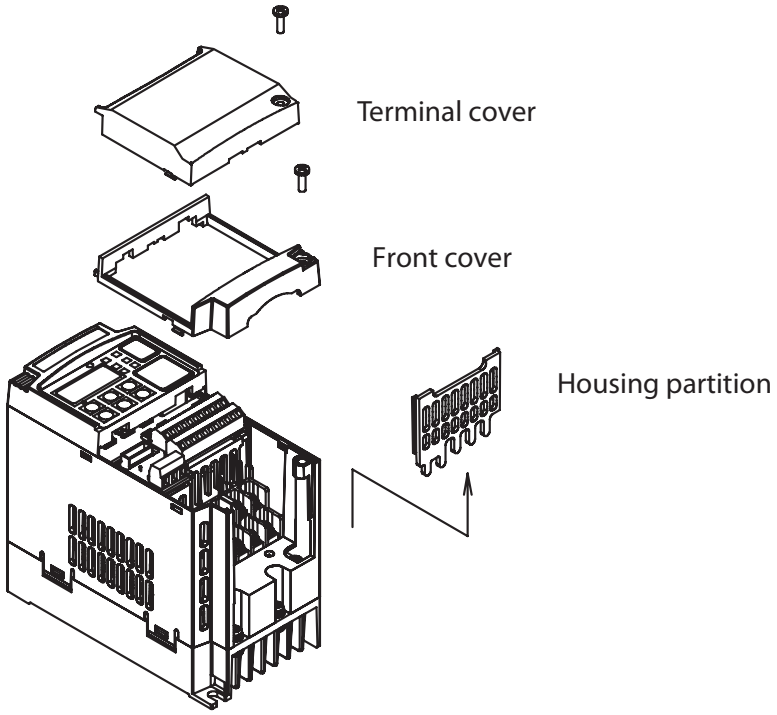

Note The housing partition can be removed without removing the front cover in the following models.
Single-phase 200 V: 0.7 to 2.2 kW
Three-phase 200 V: 1.5 to 15 kW
Three-phase 400 V: All size

2-1-3 User removable parts by each inverter size.

IP20

1-phase 200 V 0.1, 0.2, 0.4 kW

3-phase 200 V 0.1, 0.2, 0.4, 0.75 kW

Even if the W × H dimension is the same, the D dimension for the cooling fin varies depending on the capacity.

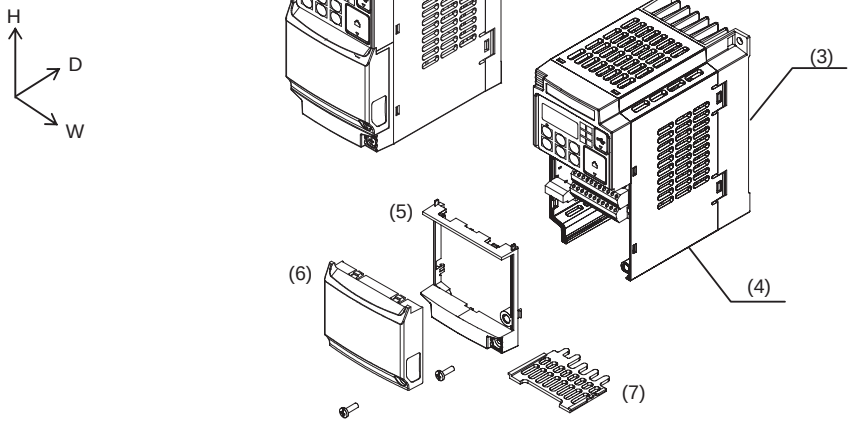

1-phase 200 V 0.75, 1.5, 2.2 kW

3-phase 200 V 1.5, 2.2 kW

3-phase 400 V 0.4, 0.75, 1.5, 2.2, 3.0 kW

Even if the W × H dimension is the same, the D dimension for the cooling fin varies depending on the capacity.

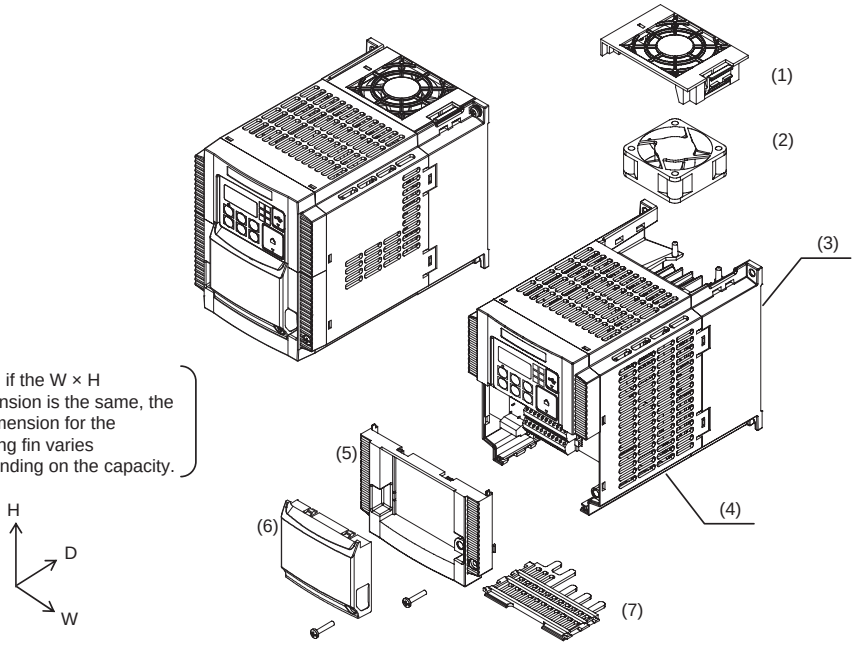

(1) Cooling fan cover
(2) Cooling fan
(3) Cooling fin
(4) Main housing
(5) Terminal block cover
(6) Optional board cover
(7) Backing plate

Note 3-phase 200 V/0.75 kW models come with a cooling fan.
1-phase 200 V/0.75 kW models and 3-phase 400 V/0.4 kW/0.75 kW models do not come with a cooling fan.

3-phase 200 V 3.7 kW
3-phase 400V 4.0 kW

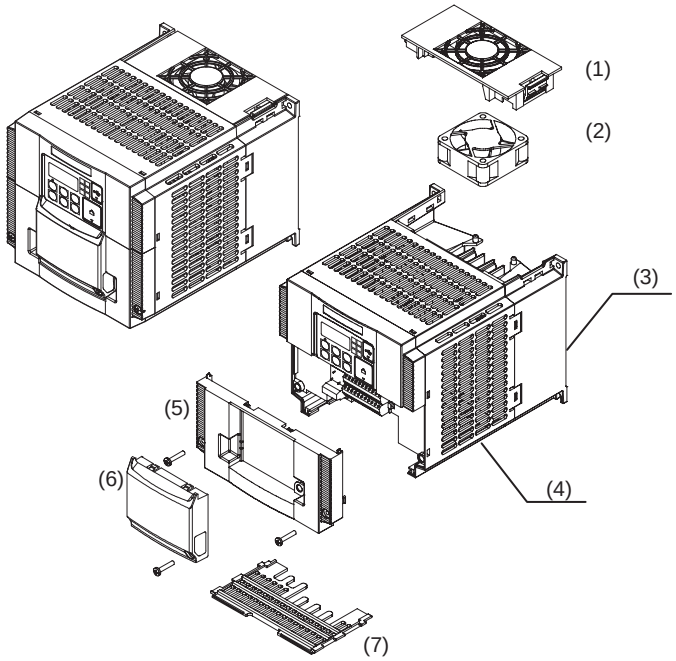

3-phase 200 V 5.5, 7.5 kW
3-phase 400 V 5.5, 7.5 kW

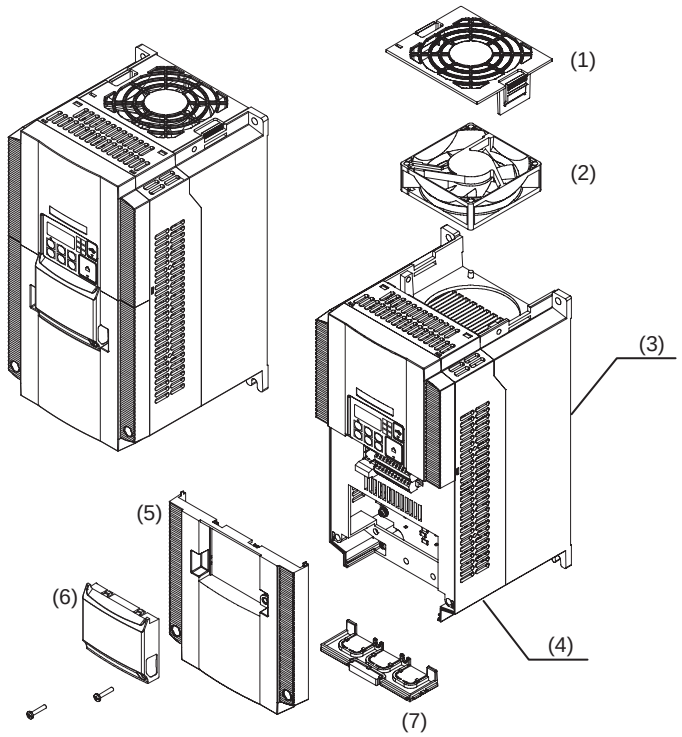

(1) Cooling fan cover
(2) Cooling fan
(3) Cooling fin
(4) Main housing
(5) Terminal block cover
(6) Optional board cover
(7) Backing plate

3-phase 200 V 11 kW
3-phase 400 V 11, 15 kW

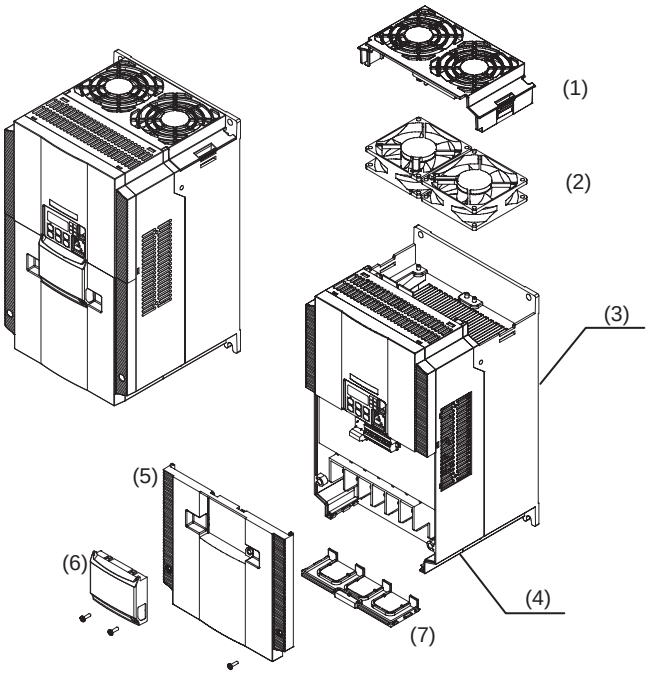

3-phase 200 V 15 kW

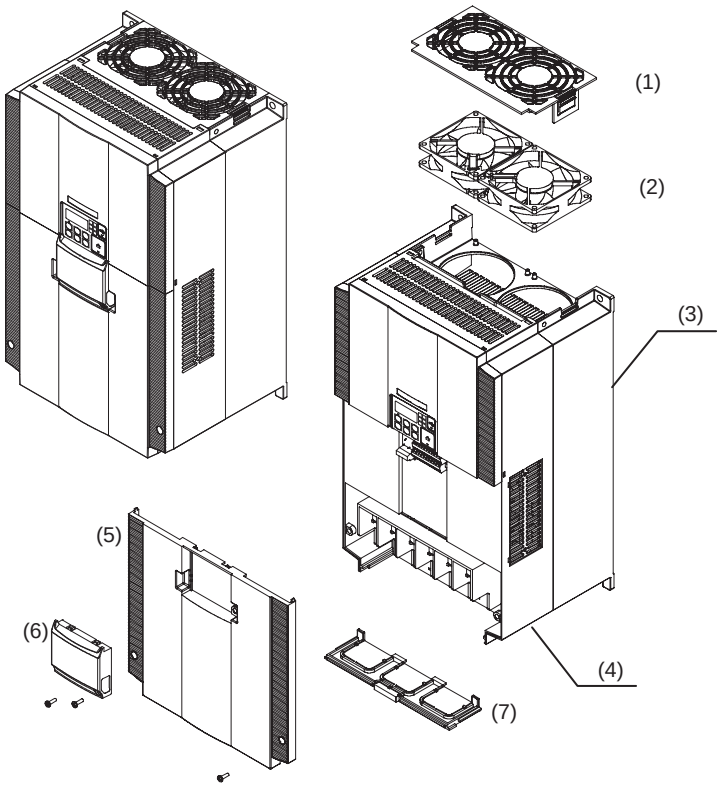

(1) Cooling fan cover
(2) Cooling fan
(3) Cooling fin
(4) Main housing
(5) Terminal block cover
(6) Optional board cover
(7) Backing plate

IP54

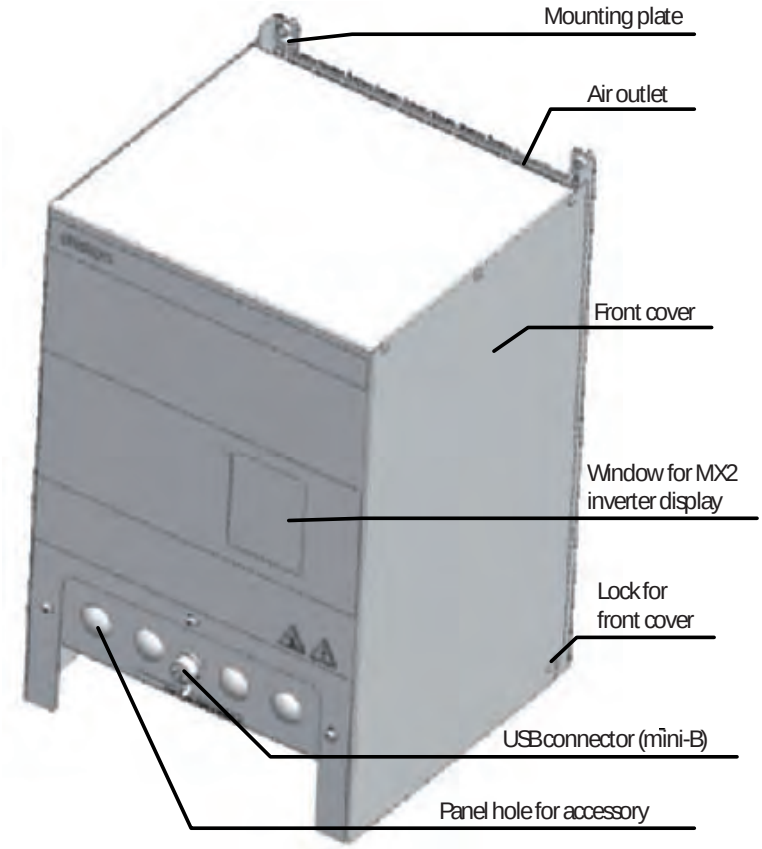
Mounting plate
Air outlet
Front cover
Window for MX2 inverter display
Lock for front cover
USB connector (mini-B)
Panel hole for accessory

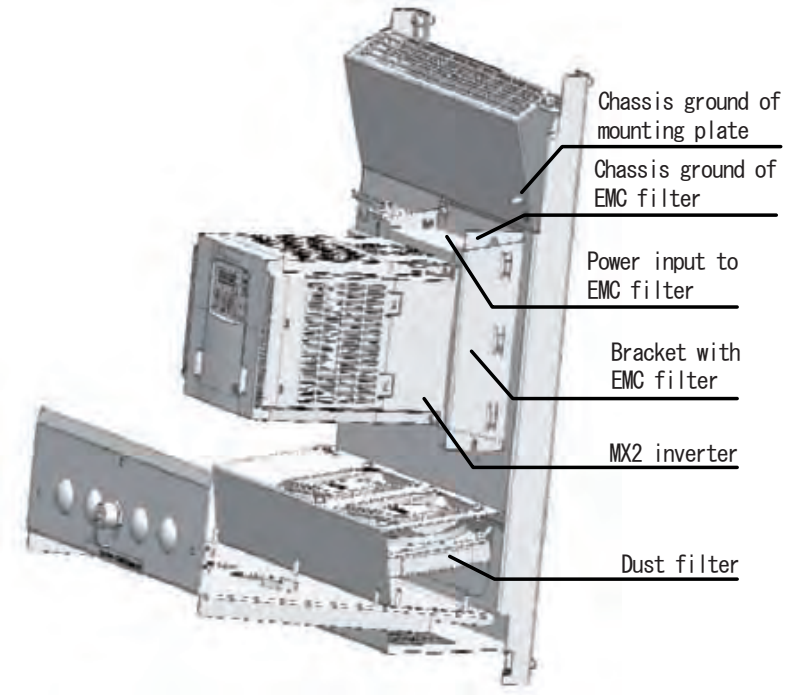
Chassis ground of mounting plate
Chassis ground of EMC filter
Power input to EMC filter
Bracket with EMC filter
MX2 inverter
Dust filter

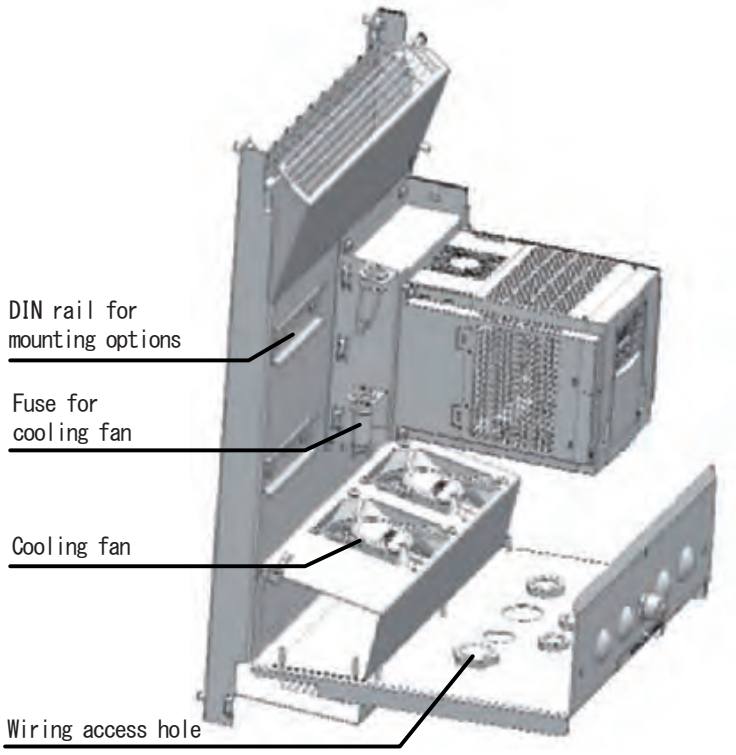
DIN rail for
mounting options
Fuse for
cooling fan
Cooling fan
Wiring access hole

2-2 Basic System Description

A motor control system will obviously include a motor and inverter, as well as a circuit breaker or fuses for safety. If you are connecting a motor to the inverter on a test bench just to get started, that's all you may need for now. But a system can also have a variety of additional components. Some can be for noise suppression, while others may enhance the inverter's braking performance. The figure and table below show a system with all the **optional** components you might need in your finished application.

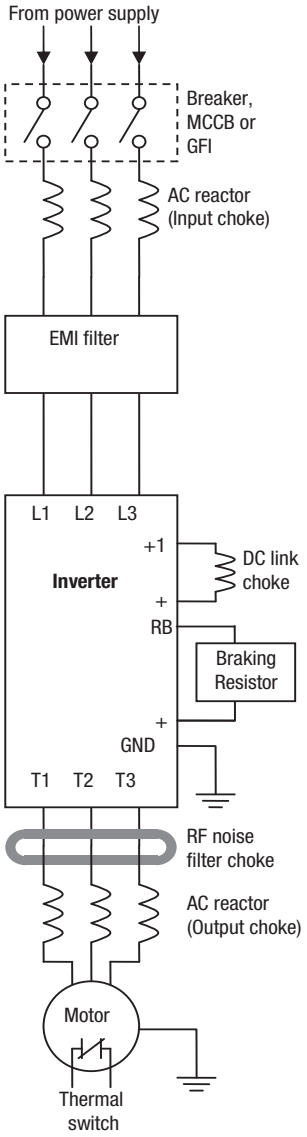

Name	Function
Breaker / disconnect	A molded-case circuit breaker (MCCB), ground fault interrupter (GFI), or a fused disconnect device. NOTE: The installer must refer to the local country norms of application to ensure safety and compliance.
Input-side AC Reactor	This is useful in reducing low frequency harmonics distortion induced on the power supply lines and as consequence improve the power factor. WARNING: Some applications must use an input-side AC Reactor to prevent inverter damage. See *Warning* on next page.
EMC filter (for CE applications, see Appendix D)	Reduces the conducted high frequency noise on the power supply wiring between the inverter and the power distribution system. Connect to the inverter primary (input) side.
DC link choke	Reduce harmonics generated by the inverter motor driving section, by smoothing the current demand of the capacitors.
Braking Resistor	Used to disipate regenerative energy from the motor that is accumulated into the DC bus charging the capacitors and increasing the voltage.
Radio noise output filter	Electrical noise interference may occur on nearby equipment such as a radio receiver. This magnetic choke filter helps reduce very high frequency radiated noise (can also be used on input).
Output-side AC Reactor	This reactor in its standard type (only L inductor), prevents the high voltage ringing of PWM modulation to reach the motor, compensating for the capacity of the motor cables, specially with long lengths. For more effective (and expensive) options, like sinus filter (targetting network-like waveforms) or dV/dt filters, please check with your dealer.

Note Note that some components are required for regulatory agency compliance (see SECTION 5 *Inverter System Accessories* and Appendix D *CE-EMC Installation Guidelines*).

⚠ **WARNING** In the cases below involving a general-purpose inverter, a large peak current can flow on the power supply side, sometimes destroying the converter module:

1. The unbalance factor of the power supply is 3% or higher.
2. The power supply capacity is at least 10 times greater than the inverter capacity (or the power supply capacity is 500k VA or more).
3. Abrupt power supply changes are expected, due to conditions such as:
   a. Several inverters are interconnected with a short bus.
   b. A thyristor converter and an inverter are interconnected with a short bus.
   c. An installed phase advance capacitor opens and closes.

Where these conditions exist or when the connected equipment must be highly reliable, you MUST install an input-side AC reactor of 3% (at a voltage drop at rated current) with respect to the supply voltage on the power supply side. Also, where the effects of an indirect lightning strike are possible, install a lightning conductor.

2-3 Step-by-Step Basic Installation

This section will guide you through the following basic steps of installation:

Step	Activity	Page
1	Choose a mounting location in compliance with the Warnings and Cautions. See notes below.	page 29
2	Check the mounting location for adequate ventilation	page 32
3	Cover the inverter's ventilation openings to prevent debris from entering.	page 42
4	Check the inverter dimensions for footprint and mounting hole locations.	page 34
5	Study the Cautions, Warnings, wire and fuse sizes, and terminal torque specifications before wiring the inverter.	page 42
6	Connect wiring for the inverter power input.	page 46
7	Wire the inverter output to the motor.	page 51
8	Uncover the inverter's ventilation openings applied in Step 3.	page 55
9	Perform the Powerup Test. (This step includes several sub steps.)	page 56
10	Make observations and check your installation.	page 68

Note If the installation is in an EU country, study the EMC installation guidelines in Appendix D *CE-EMC Installation Guidelines*.

Choosing a Mounting Location

Study the following caution messages associated with mounting the inverter. This is the time when mistakes are most likely to occur that will result in expensive rework, equipment damage, or personal injury.

⚠ **WARNING** Hazard of electrical shock. Never touch the naked PCB (printed circuit board) or bus bars while the unit is powered up. Even for switch portion, the inverter must be powered OFF before you change.

⚠ **Caution** Be sure to install the unit on flame-resistant material such as steel plate. Otherwise, there is the danger of fire.

⚠ **Caution** Be sure not to place any flammable materials near the inverter. Otherwise, there is the danger of fire.

⚠ **Caution** Be sure not to let the foreign matter enter vent openings in the inverter housing, such as wire clippings, spatter from welding, metal shavings, dust, etc. Otherwise, there is the danger of fire.

⚠ **Caution** Be sure to install the inverter in a place that can bear the weight according to the specifications in the text (Chapter 1, Specifications Tables). Otherwise, it may fall and cause injury to personnel.

⚠ **Caution** Be sure to install the unit on a perpendicular wall that is not subject to vibration. Otherwise, it may fall and cause injury to personnel.

⚠ **Caution** Be sure not to install or operate an inverter that is damaged or has missing parts. Otherwise, it may cause injury to personnel.

⚠ **Caution** Be sure to install the inverter in a well-ventilated room that does not have direct exposure to sunlight, a tendency for high temperature, high humidity or dew condensation, high levels of dust, corrosive gas, explosive gas, inflammable gas, grinding-fluid mist, salt damage, etc. Otherwise, there is the danger of fire.

2-3-1 Installation

IP20

Install the Inverter vertically on a wall.
Install the Inverter on a nonflammable wall surface material, like metal.
Other installations are not possible due to heat convection design of the inverter is vertical.

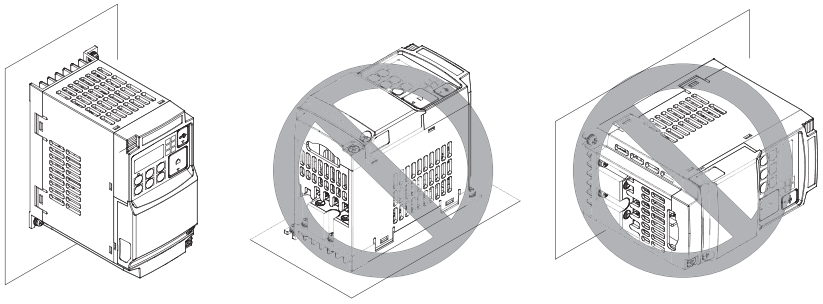

IP54

Installation Steps

1. Choose installation location.
2. Check housing dimensions for footprint and mounting hole locations.
3. Remove the front cover.
4. Mount the mounting plate of the MX2 IP54 housing.
5. Connect all wiring.
6. Check your installation.
7. Attach the front cover.

Installation Locations

Note: Do not store or use the MX2 IP54 housing in locations subject to condensation. Doing so can result in damaging the unit.

Mounting Orientation and Spacing

Always install the housing in an upright position. Leave 10 cm space above and below the housing for proper cooling. Leave 10 cm space to the left and to the right for replacement of the dust filter.

Removing the Front Cover

⚠ **WARNING** Turn off the power supply before removing the cover. Not doing so may result in a serious injury due to an electric shock.

1. Loosen the three screws that hold the front cover.
2. Pull the bottom of the front cover for about 5 cm.
3. Move the front cover upwards to remove.

⚠ **Caution** Only authorized people should be allowed to open the cover.

⚠ **Caution** Do not touch the cover during the power supply and for some time after the power shutdown. Doing so might result in a moderate burn.

Mounting MX2 IP54 Mounting Plate

All housings use for M6 mounting screws. Be sure to use lock washers or other means to ensure screws do not loosen due to a vibration.

2-3-2 Installation Environment clearance

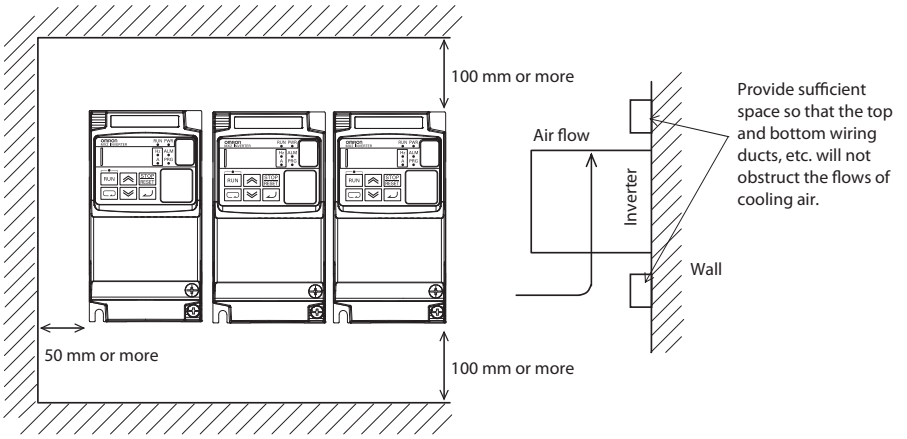

Make sure the ambient temperature remains within the rated range (–10 to 50°C). Take note that if the ambient temperature reaches or exceeds 40°C, the carrier frequency and output current must be derated (check derating tables per each inverter model in *Derating Curves on page 9*). If the Inverter is used in an environment exceeding the allowable operating temperature range, the product life of the Inverter (specifically, the capacitor) will be shortened.

Measure and check the temperature approx. 5 cm from the bottom center of the Inverter body.

Provide sufficient space around the Inverter because it can become very hot (up to 150°C or so). Or provide the right air ventilation forced cooling flow when designing the enclosure :

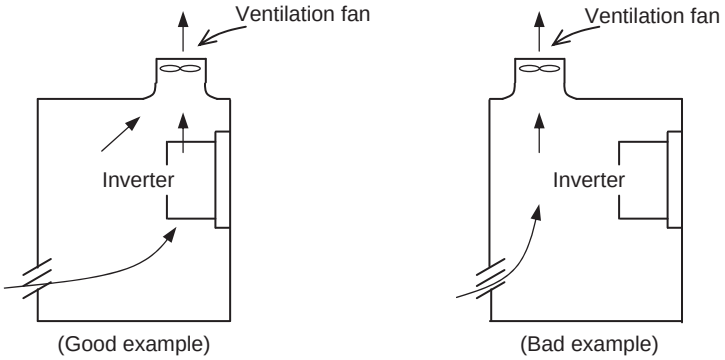

Keep the Inverter away from heating elements (such as a Braking Resistor, reactor, etc.).

Although side-by-side installation is possible. The ambient temperature of the installation site must not exceed 40°C and the carrier frequency and output current must be derated if side-by-side installation is used. For details check *Derating Curves on page 9*.

Make sure that the humidity in the installation site is within the allowable operating range (20% to 90% RH), as defined in the standard specifications.

Heat Radiation from Inverter

1-phase/3-phase 200 V											
Inverter capacity (kW)	0.1	0.2	0.4	0.75	1.5	2.2	3.7	5.5	7.5	11	15
Load with 100% loss (W)	12	22	30	48	79	104	154	229	313	458	625
Efficiency at rated output (%)	89.5	90	93	94	95	95.5	96	96	96	96	96

3-phase 400 V										
Inverter capacity (kW)	0.4	0.75	1.5	2.2	3.0	4.0	5.5	7.5	11	15
Load with 100% loss (W)	35	56	96	116	125	167	229	296	411	528
Efficiency at rated output (%)	92	93	94	95	96	96	96	96.2	96.4	96.6

⚠ **Caution** Be sure to maintain the specified clearance area around the inverter and to provide adequate ventilation. Otherwise, the inverter may overheat and cause equipment damage or fire.

2-3-3 Installation/Removal Method of the Terminal Block Cover

2-3-3-1 Removal method

Loosen the screw(s) (1 or 2 locations) securing the terminal block cover.

While pressing the bottom of the terminal block cover in the direction of the arrow, pull the terminal block cover downward to remove.

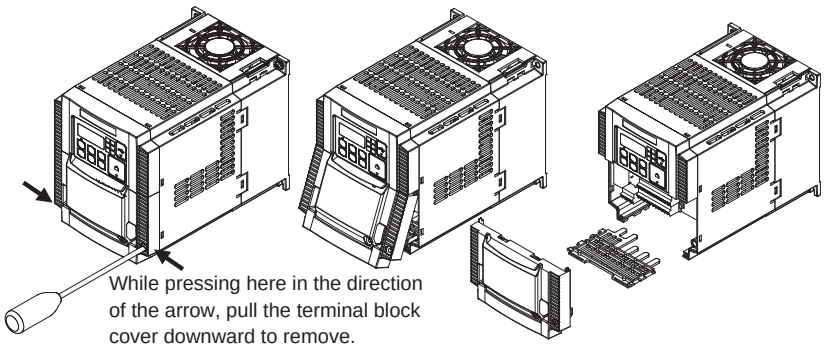

While pressing here in the direction of the arrow, pull the terminal block cover downward to remove.

The terminal block cover is secured with one screw at the bottom right for 3.0 kW and smaller models, or with two screws on both sides for 3.7 kW and larger models.

The optional board cover is affixed with screws onto the terminal block cover, but it is not affixed onto the main unit. Accordingly, the terminal block cover can be removed without removing the optional board cover.

2-3-3-2 Installation method

Follow the removal procedure in reverse. Set the top side of the terminal block cover onto the main unit and push in the cover until you hear a “click” sound.

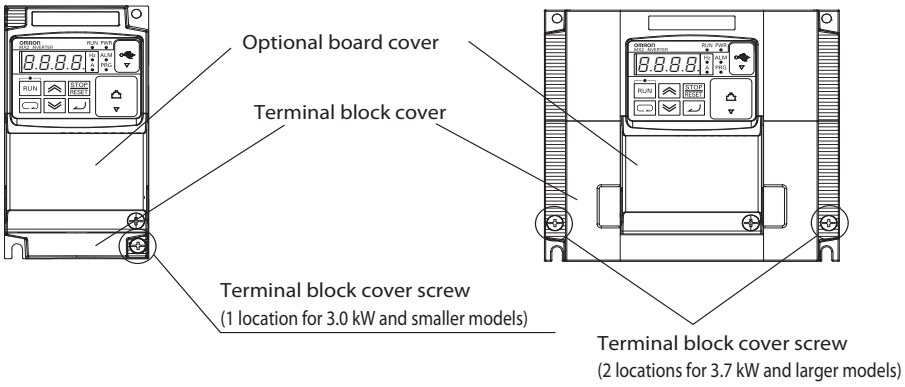

2-3-4 Inverter Dimensions

IP20

Locate the applicable drawing on the following pages for your inverter. Dimensions are given in millimeters (inches) format.

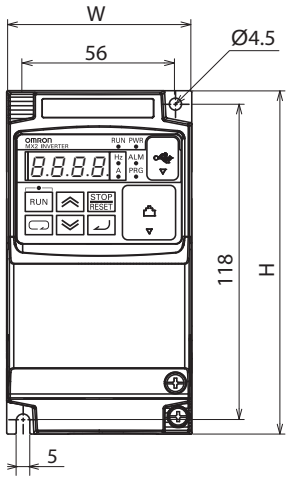

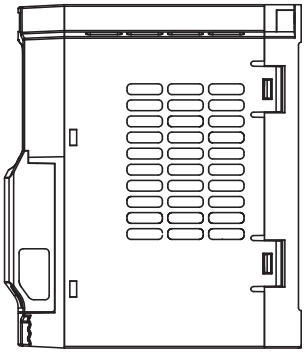

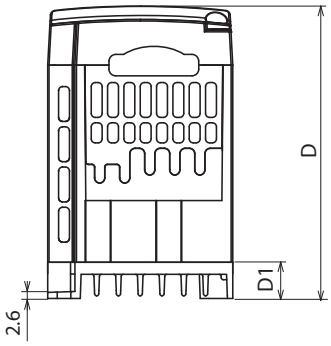

Power	Type	W (mm)	H (mm)	D (mm)	D1 (mm)
Single-phase 200V	3G3MX2-AB001 3G3MX2-AB002	68	128	109	13.5
	3G3MX2-AB004			122.5	27
3-phase 200 V	3G3MX2-A2001 3G3MX2-A2002			109	13.5
	3G3MX2-A2004			122.5	27
	3G3MX2-A2007			145.5	50

Note Some inverter housing require two mounting screws, while other requires four. Be sure to use lock washers or other means to ensure screws do not loosen due to vibration.

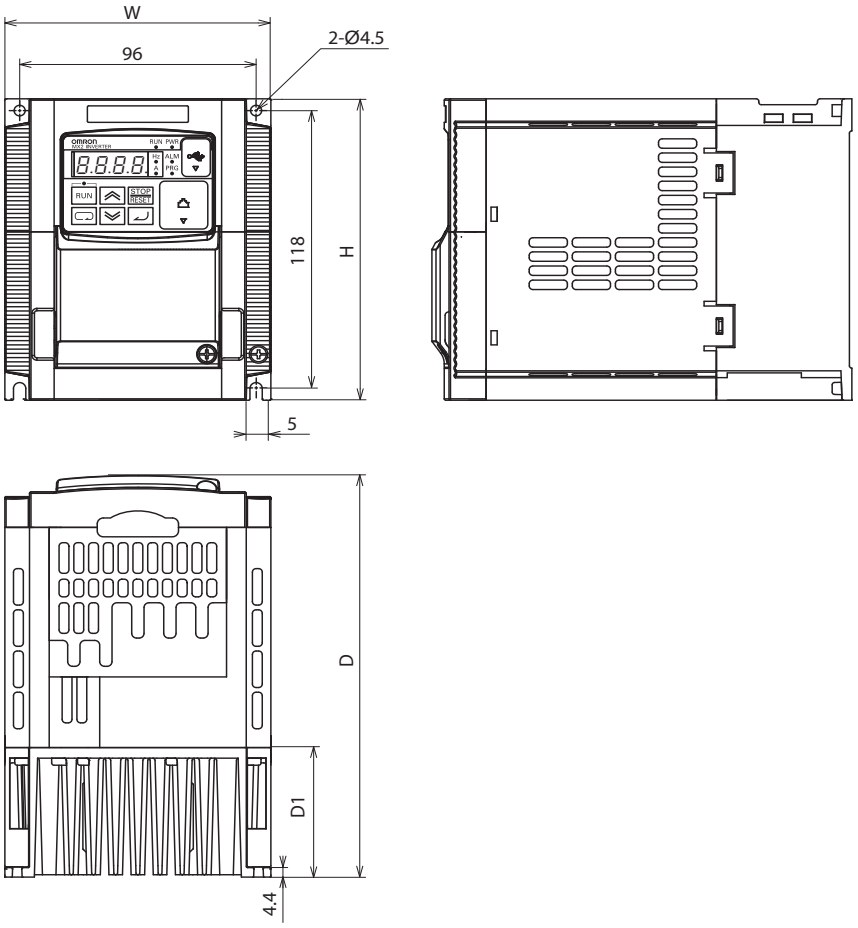

Power	Type	W (mm)	H (mm)	D (mm)	D1 (mm)
Single-phase 200 V	3G3MX2-AB007	108	128	170.5	55
	3G3MX2-AB015 3G3MX2-AB022				
3-phase 200 V	3G3MX2-A2015 3G3MX2-A2022			170.5	55
3-phase 400V	3G3MX2-A4004			143.5	28
	3G3MX2-A4007 3G3MX2-A4015 3G3MX2-A4022 3G3MX2-A4030			170.5	55

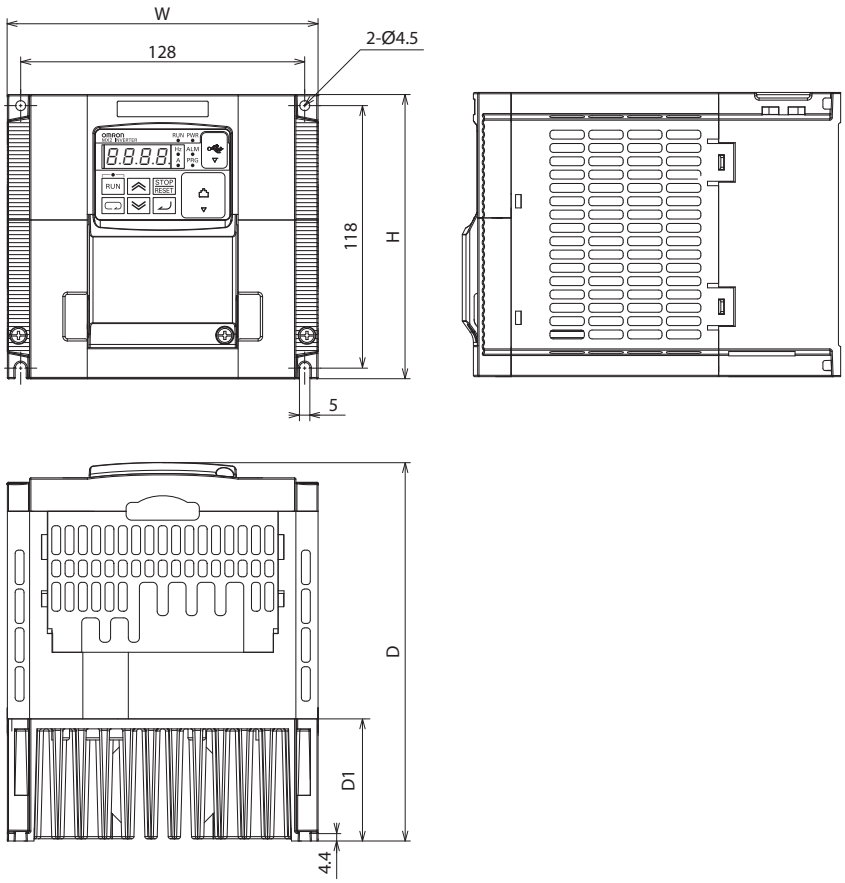

Power	Type	W (mm)	H (mm)	D (mm)	D1 (mm)
3-phase 200 V	3G3MX2-A2037	140	128	170,5	55
3-phase 400 V	3G3MX2-A4040				

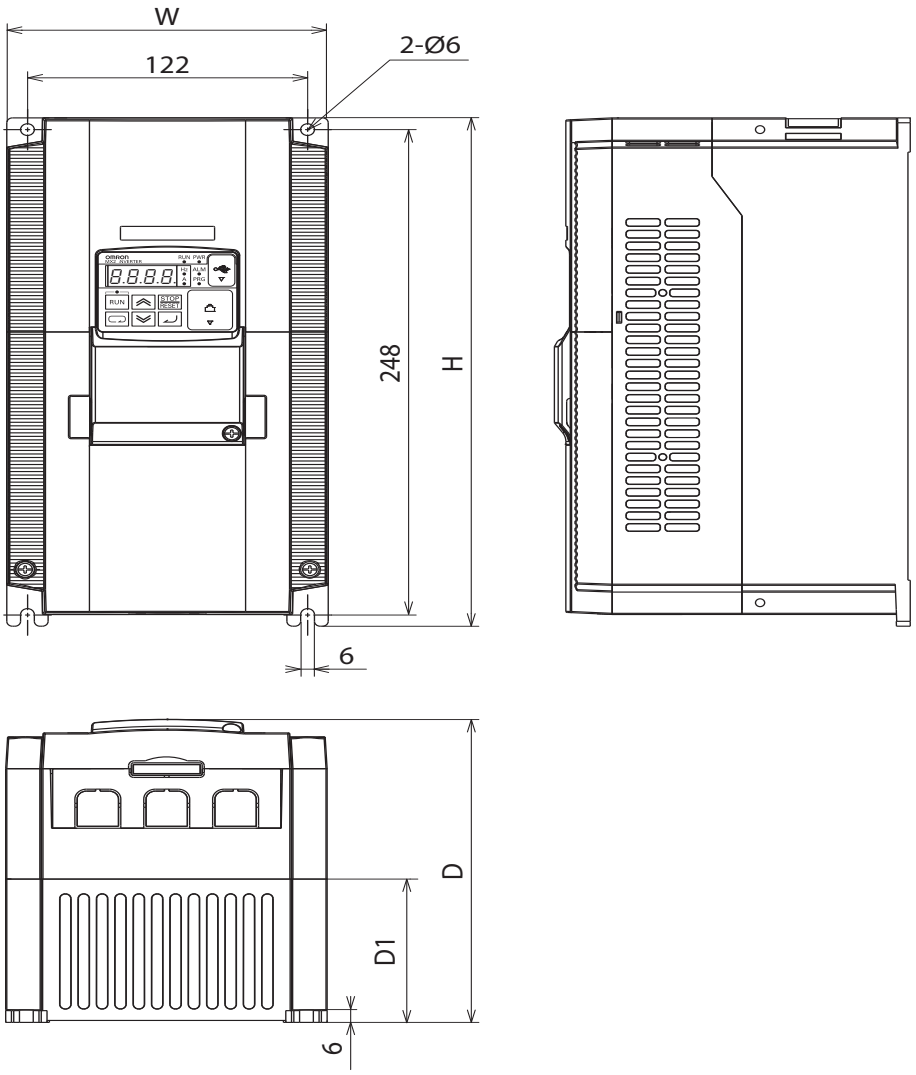

Power	Type	W (mm)	H (mm)	D (mm)	D1 (mm)
3-phase 200 V	3G3MX2-A2055 3G3MX2-A2075	140	260	155	73.3
3-phase 400 V	3G3MX2-A4055 3G3MX2-A4075				

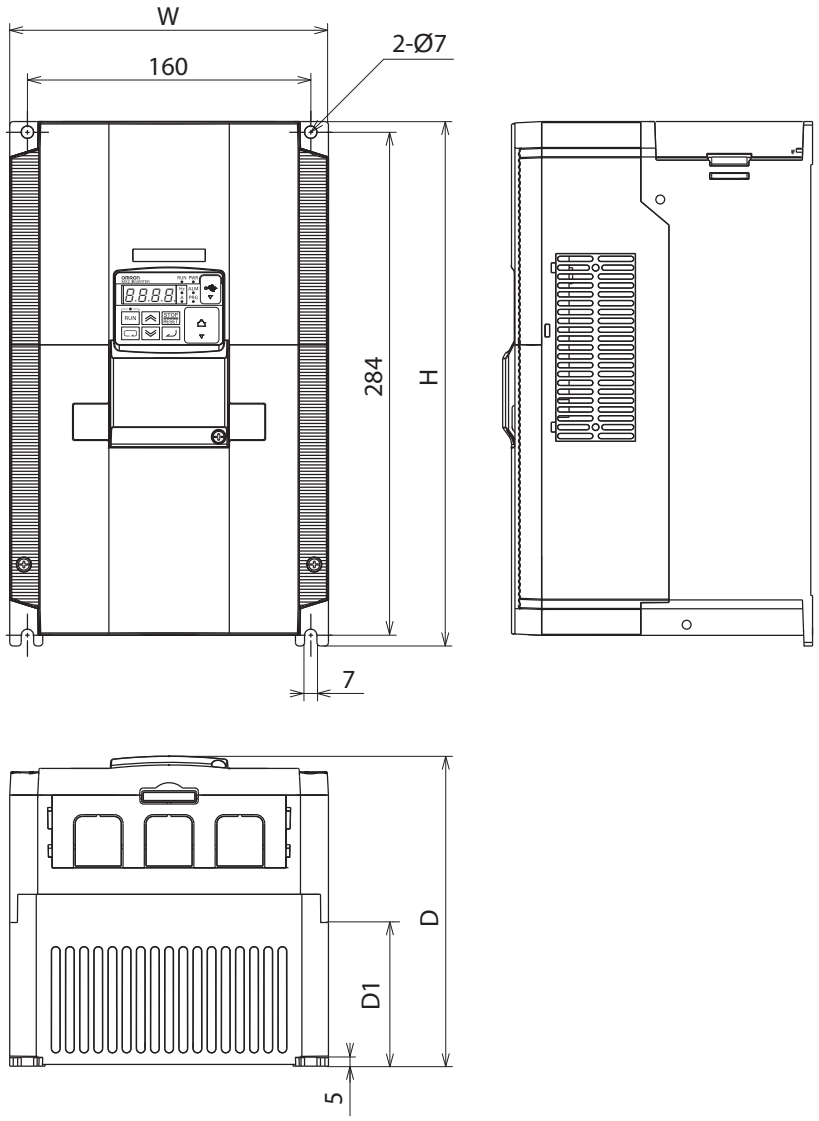

Power	Type	W (mm)	H (mm)	D (mm)	D1 (mm)
3-phase 200 V	3G3MX2-A2110	180	296	175	97
3-phase 400 V	3G3MX2-A4110 3G3MX2-A4150				

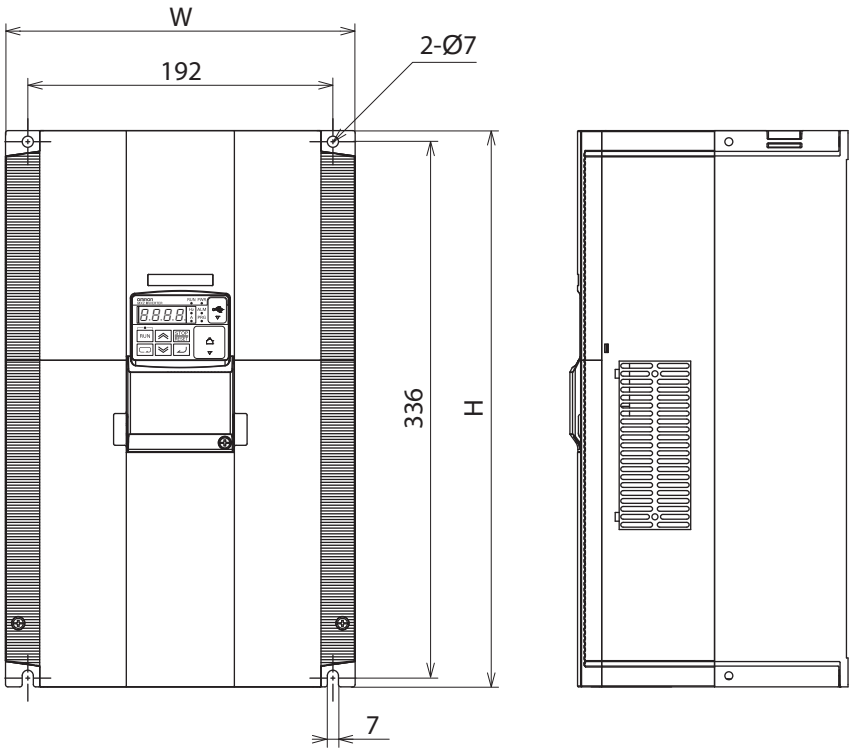

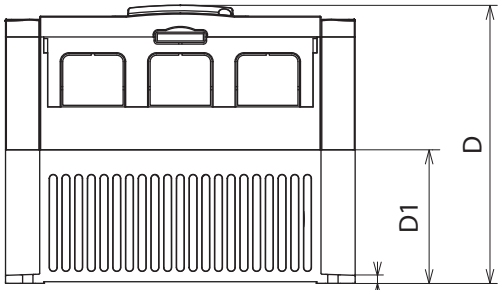

Power	Type	W (mm)	H (mm)	D (mm)	D1 (mm)
3-phase 200 V	3G3MX2-A2150	220	350	175	84

IP54

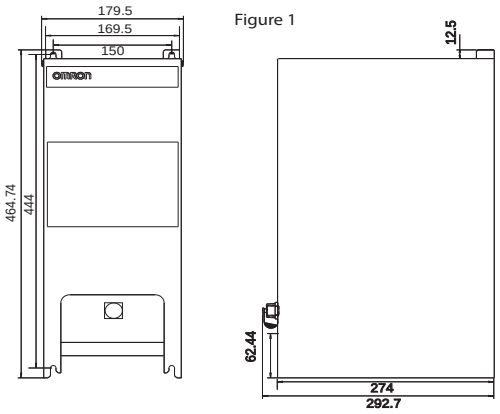

Figure 1	
Power	**Type**
Single-phase 200 V	3G3MX2-DB001-E
	3G3MX2-DB002-E
	3G3MX2-DB004-E
3-phase 200 V	3G3MX2-D2001-E
	3G3MX2-D2002-E
	3G3MX2-D2004-E
	3G3MX2-D2007-E

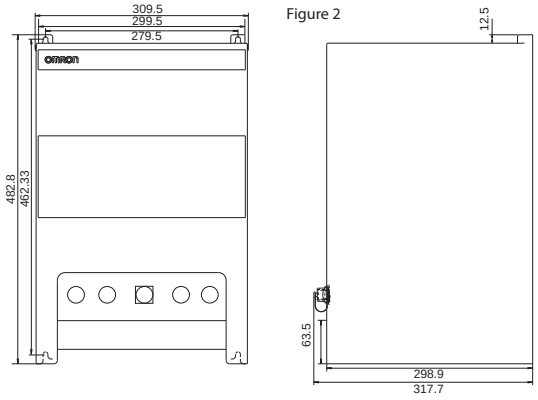

Figure 2	
Power	**Type**
Single-phase 200 V	3G3MX2-DB001-EC
	3G3MX2-DB002-EC
	3G3MX2-DB004-EC
	3G3MX2-DB007-EC
	3G3MX2-DB015-EC
	3G3MX2-DB022-EC
3-phase 200 V	3G3MX2-D2001-EC
	3G3MX2-D2002-EC
	3G3MX2-D2004-EC
	3G3MX2-D2007-EC
	3G3MX2-D2015-EC
	3G3MX2-D2022-EC
	3G3MX2-D2037-EC

Figure 2	
Power	**Type**
3-phase 400 V	3G3MX2-D4004-EC
	3G3MX2-D4007-EC
	3G3MX2-D4015-EC
	3G3MX2-D4022-EC
	3G3MX2-D4030-EC
	3G3MX2-D4040-EC

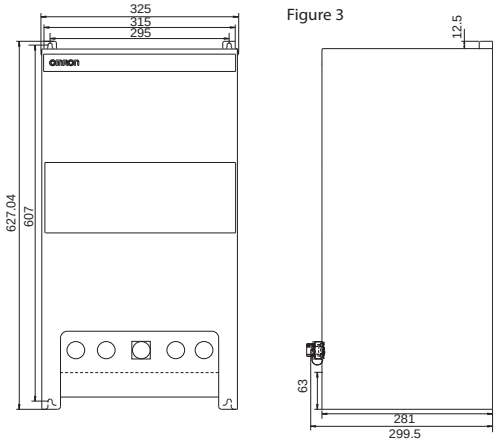

Figure 3	
Power	**Type**
3-phase 200 V	3G3MX2-D2055-EC
	3G3MX2-D2075-EC
3-phase 400 V	3G3MX2-D4055-EC
	3G3MX2-D4075-EC

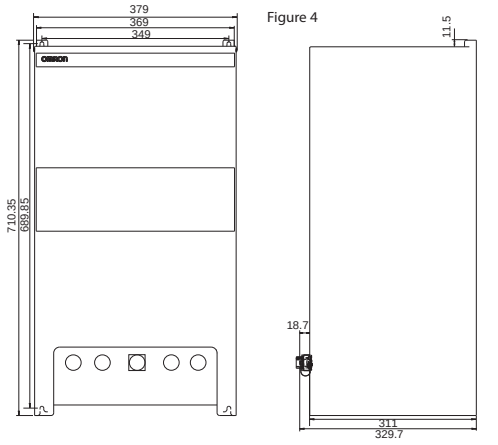

Figure 4	
Power	**Type**
3-phase 200 V	3G3MX2-D2110-EC
	3G3MX2-D2150-EC
3-phase 400 V	3G3MX2-D4110-EC
	3G3MX2-D4150-EC

2-3-5 Prepare for Wiring

IP20

Step 1 Before proceeding to the wiring section, it's a good time to *temporarily* covers the inverter's ventilation openings. Paper and masking tape are all that is needed. This will prevent harmful debris such as wire clippings and metal shavings from entering the inverter during installation.

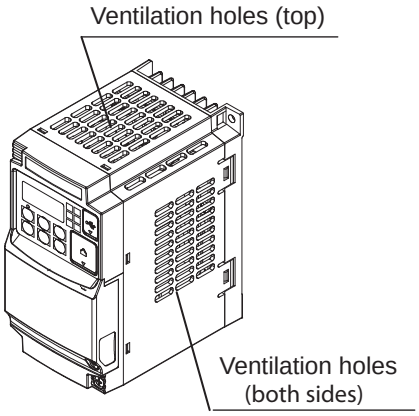

Step 2 It is very important to perform the wiring steps carefully and correctly. Before proceeding, please study the caution and warning message herebelow.

⚠ **WARNING** "USE 60/75 C Cu wire only" or equivalent. For models 3G3MX2-A2001, -A2002, -A2004, -A2007, -AB015, -AB022, -A4004, -A4007, -A4015, -A4022, -A4030

⚠ **WARNING** "USE 75 C Cu wire only" or equivalent. For models 3G3MX2-AB001, -AB002, -AB004, -AB007, -A2015, -A2022, -A2037, A2055, A2075, -A2110, -A2150, -A4040, -A4055, -A4075, -A4110 and -A4150

⚠ **WARNING** "Suitable for use on a circuit capable of delivering not more than 100k rms symmetrical amperes, 240V maximum when protected by Class CC, G, J or R fuses or circuit breaker having an interrupting rating not les than 100,000 rms symmetrical amperes, 240 volts maximum". For 200V models.

⚠ **WARNING** "Suitable for use on a circuit capable of delivering not more than 100k rms symmetrical amperes, 480V maximum when protected by Class CC, G, J or R fuses or circuit breaker having an interrupting rating not les than 100,000 rms symmetrical amperes, 480 volts maximum." For 400V models.

⚠ **HIGH VOLTAGE** Be sure to ground the unit. Otherwise, there is a danger of electric shock and/or fire.

⚠ **HIGH VOLTAGE** Wiring work shall be carried out only by qualified personnel. Otherwise, there is a danger of electric shock and/or fire.

⚠ **HIGH VOLTAGE** Implement wiring after checking that the power supply is OFF. Otherwise, you may incur electric shock and/or fire.

⚠ **HIGH VOLTAGE** Do not connect wiring to an inverter or operate an inverter that is not mounted according to the instructions given in this manual. Otherwise, there is a danger of electric shock and/or injury to personnel.

IP54

Connect all wiring via wiring access holes (in the botttom of the MX2 IP54 mounting plate).

Connect the AC power supply voltage to the EMC filter.

Connect the three phase motor to the motor output terminals of the MX2 inverter.

To prevent electric shock, be sure to ground the MX2 EMC filter, the motor, and the MX2 IP54 mounting plate. Use a star ground (single-point) arrenge-ment, and never daisy-chain the grounds (point-to-point).

Connect other wiring if applicable (wiring for I/O, wiring for network communi-cation).

⚠ **WARNING** Connect the chassis ground terminal of mounting plate to earth ground. Not doing so might result in an electric shock.

⚠ **WARNING** Connect the chassis ground terminal of the MX2 EMC filter to earth ground. Not doing so might result in an electric shock

Note: Check all wiring before turning inverter ON. Not doing so might result in damaging the unit.

Note: Use shielded cables to avoid electrical interference. Not doing so might result in unexpected behaviour or the unit.

Wiring Access Holes

Layout of cable access holes at the bottom of the MX2 IP54 mounting plate. A blinding plug is used for POWER OUT, I/O and Communication IN/OUT access holes.

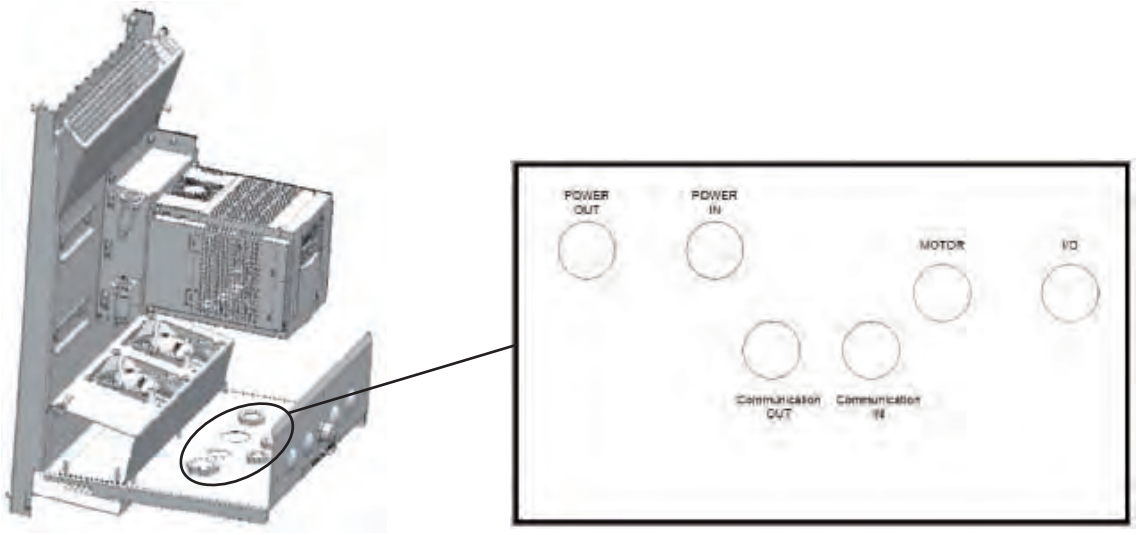

Cable gland diameters for wiring access holes:

Housing Type	Power IN/OUT	Motor	I/O	Communication IN/OUT
1	M16	M25	M20	M16
2	M25	M32	M20	M16
3	M32	M40	M20	M16
4	M40	M50	M20	M16

Note: Use IP54 or better cable glands to prevent moisture from entering the unit. Not doing so might result in damaging the unit.

Note: Use cable glands of right size to prevent moisture from entering the unit. Not doing so might result in damaging the unit.

Note: Use EMC cable gland for shielded motor wiring or use the cable bracket supplied with the MX2 IP54 housing. Not doing so might result in unexpected behaviour of the unit due to electrical interference.



Note: Moisture can enter the enclosure when the blinding plug is removed. Do not remove the blinding plug when the wiring access hole is not used. Not doing so might result in damaging the unit.

2-3-6 Determining Wire and Fuse Sizes

The maximum motor currents in your application determines the recommended wore size. The following table gives the wire size in AWG. The "Power Lines" column applies to the inverter input power, output wires to the motor, the earth ground connection, and any other components shown in the "*Basic System Description*" on page 28. The "Signal Lines" column applies to any wire connecting to the two green connectors just inside the front cover panel.

Motor Output				Inverter Model	Wiring		Applicable equipment
kW		HP			Power Lines	Signal Lines	Fuse (UL-rated, class J, 600 V)
VT	CT	VT	CT				
0.2	0.1	¼	1/8	3G3MX2-AB001	AWG16 / 1.3 mm² (75°C only)	18 to 28 AWG / 0.14 to 0.75 mm² shielded wire *4	10 A
0.4	0.2	½	¼	3G3MX2-AB002			
0.55	0.4	¾	½	3G3MX2-AB004			
1.1	0.75	1.5	1	3G3MX2-AB007	AWG12 / 3.3 mm² (75°C only)		15 A
2.2	1.5	3	2	3G3MX2-AB015	AWG10 / 5.3 mm²		30 A
3.0	2.2	4	3	3G3MX2-AB022			
0.2	0.1	¼	1/8	3G3MX2-A2001	AWG16 / 1.3 mm²		10 A
0.4	0.2	½	¼	3G3MX2-A2002			
0.75	0.4	1	½	3G3MX2-A2004			
1.1	0.75	1.5	1	3G3MX2-A2007			15 A
2.2	1.5	3	2	3G3MX2-A2015	AWG14 / 2.1 mm² (75°C only)		
3.0	2.2	4	3	3G3MX2-A2022	AWG12 / 3.3 mm² (75°C only)		20 A
5.5	3.7	7.5	5	3G3MX2-A2037	AWG10 / 5.3 mm² (75°C only)		30 A
7.5	5.5	10	7.5	3G3MX2-A2055	AWG6 / 13 mm² (75°C only)		40 A
11	7.5	15	10	3G3MX2-A2075			
15	11	20	15	3G3MX2-A2110	AWG4 / 21 mm² (75°C only)		80 A
18.5	15	25	20	3G3MX2-A2150	AWG2 / 34 mm² (75°C only)		80 A
0.75	0.4	1	½	3G3MX2-A4004	AWG16 / 1.3 mm²		10 A
1.5	0.75	2	1	3G3MX2-A4007			
2.2	1.5	3	2	3G3MX2-A4015			
3.0	2.2	4	3	3G3MX2-A4022	AWG14 / 2.1 mm²		
4.0	3.0	5	4	3G3MX2-A4030			15 A
5.5	4.0	7.5	5	3G3MX2-A4040	AWG12 / 3.3 mm² (75°C only)		
7.5	5.5	10	7.5	3G3MX2-A4055	AWG10/ 5.3 mm² (75°C only)		20 A
11	7.5	15	10	3G3MX2-A4075			
15	11	20	15	3G3MX2-A4110	AWG6 / 13 mm² (75°C only)		40 A
18.5	15	25	20	3G3MX2-A4150	AWG6 / 13 mm² (75°C only)		40 A

Note 1 Field wiring must be made by a UL-Listed and CSA-certified closed-loop terminal connector sized for the wire gauge involved. Connector must be fixed by using the crimping tool specified by the connector manufacturer.

Note 2 Be sure to consider the capacity of the circuit breaker to be used.

Note 3 Be sure to use a larger wire gauge if power line length exceeds 66 ft. (20 m).

Note 4 Use 18 AWG / 0.75 mm² wire for the alarm signal wire ([AL0], [AL1], [AL2] terminals).

2-3-7 Terminal Dimensions and Torque Specs

The terminal screw dimensions for all MX2 inverters are listed in table below. This information is useful in sizing spade lug or ring lug connectors for wire terminations.

⚠ **Caution** Tighten the screws with the specified torque in the table below. Check for any loosening of screws. Otherwise, there is the danger of fire.

Types	Screw Diameter	Width (mm)	Tightening Torque (N·m)
3G3MX2 - AB001, AB002, AB004 3G3MX2 - A2001, A2002, A2004, A2007	M3.5	7.6	1.0
3G3MX2 - AB007, AB015, AB022 3G3MX2 - A2015, A2022, A2037 3G3MX2 - A4004, A4007, A4015, A4022, A4030, A4040	M4	10	1.4
3G3MX2 - A2055, A2075 3G3MX2 - A4055, A4075	M5	13	3.0
3G3MX2 - A2110 3G3MX2 - A4110, A4150	M6	17.5	3.9 to 5.1
3G3MX2 - A2150	M8	23	5.9 to 8.8

2-3-8 Inverter Supply Input (R/L1, S/L2, T/L3)

Step 3 In this step, you will connect wiring to the input of the inverter. First, you must determine whether the inverter model you have required three-phase power only with terminals **[R/L1], [S/L2], and [T/L3]**, or single-phase power only with terminals **[L1]** and **[N]**. Refer to the specifications label (on the side of the inverter) for the acceptable power source types!

2-3-8-1 Earth leakage circuit breaker

Use an earth leakage breaker for circuit (wiring) protection between the power supply and the main power supply terminals (R/L1, S/L2, T/L3).

An earth leakage breaker may malfunction at high frequencies as those generated by an inverter. Use an earth leakage breaker with a large high-frequency sensitive current rating.

When sensitivity of 30mA or even less earth leakage maybe required in certain applications (e.g. domestic), short motor cable and convenient low-leakage EMC filters should be selected. Check with your supplier for additional indications.

2-3-8-2 Magnetic contactor

When the Inverter protective function is activated, your system may fail or an accident may occur. Connect a magnetic contactor to turn off the Inverter power supply.

Do not start or stop the Inverter by switching ON/OFF the magnetic contactor provided in the Inverter power supply input (primary) circuit and output (secondary) circuit.To start or stop the Inverter via an external signal, use the operation command terminals (FW, RV) on the control circuit terminal block.

Do not use this Inverter with an input phase loss connection. The Inverter operating with 1-phase input may be causing a trip (due to undervoltage, overcurrent, etc.) or damage to the Inverter.

Do not turn on the power and then turn it off again more than once every 3 minutes. Doing so may damage the Inverter.

2-3-9 Inverter output terminal (U/T1, V/T2, W/T3)

For connection of the output terminal, use the compatible cable or a cable with a larger section. Otherwise, the output voltage between the Inverter and the motor may drop.

Do not mount a phase advance capacitor or surge absorber, because these devices may cause the Inverter to trip or cause damage to the capacitor or surge absorber.

If the cable length exceeds 20 m (particularly, with 400 V class), a surge voltage may be generated at the motor terminal depending on stray capacitance or inductance of the cable, causing the motor to risk his isolation (depending on motor isolation class and conditions).

To suppress surge voltage, output filters are recommended. From simple choke and output dV/dt filters to sinus filters.

To connect several motors, provide a thermal protection relay for each, as the inverter can not recognize how current is shared among the motors.

The RC value of each thermal relay should be 1.1 times larger than the motor rated current.The relay may trip earlier depending on the cable length.In this case, connect an AC reactor to the Inverter output.

2-3-10 DC Reactor Connection (+1, P/+2)

This terminal is used to connect the optional DC reactor.

By factory default, a shorting bar has been connected between terminals +1 and P/+2. Before connecting the DC reactor, remove this shorting bar.

The length of the DC reactor connection cable should be 5 m or shorter.

If the DC reactor is not being used, do not remove the shorting bar.

If you remove the shorting bar without connecting the DC reactor, no power is supplied to the Inverter main circuit, disabling operation.

2-3-11 Power connections for each inverter size

Single-phase 200 V 0.1 to 0.4 kW
Three-phase 200 V 0.1 to 0.75 kW

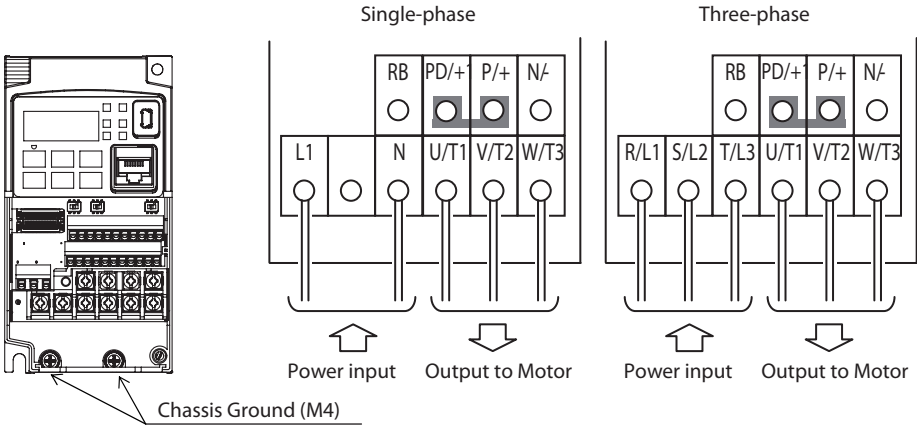

Single-phase 200 V 0.75 to 2.2 kW
Three-phase 200 V 1.5, 2.2 kW
Three-phase 400 V 0.4 to 3.0 kW

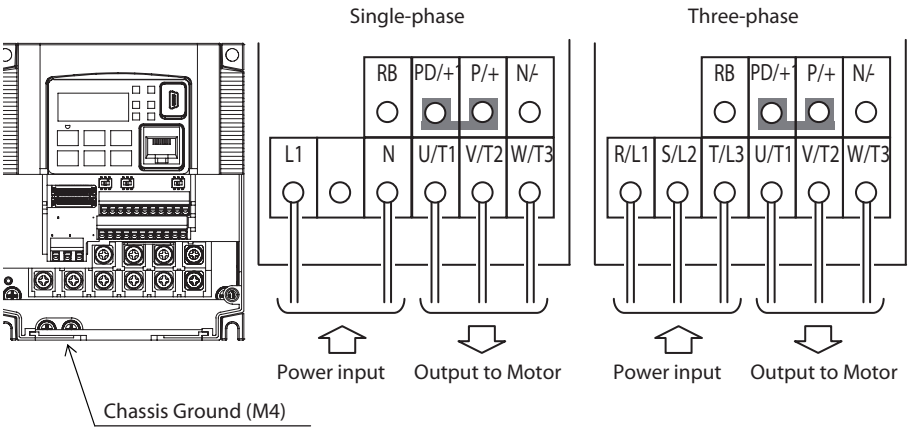

Three-phase 200 V 3.7 kW
Three-phase 400 V 4.0 kW

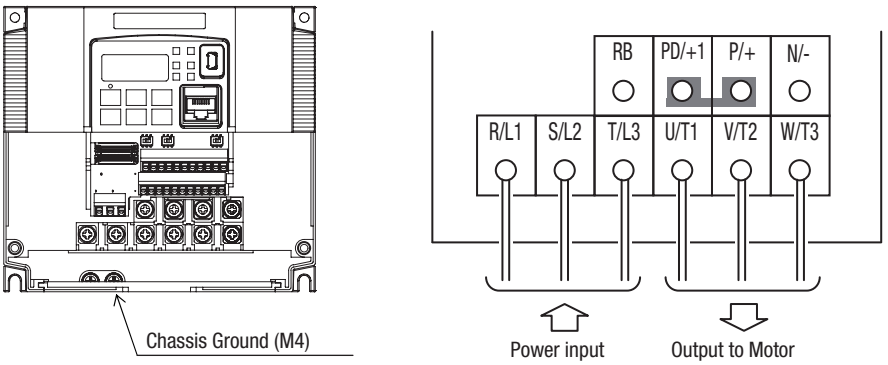

Three-phase 200 V 5.5, 7.5 kW
Three-phase 400 V 5.5, 7.5 kW

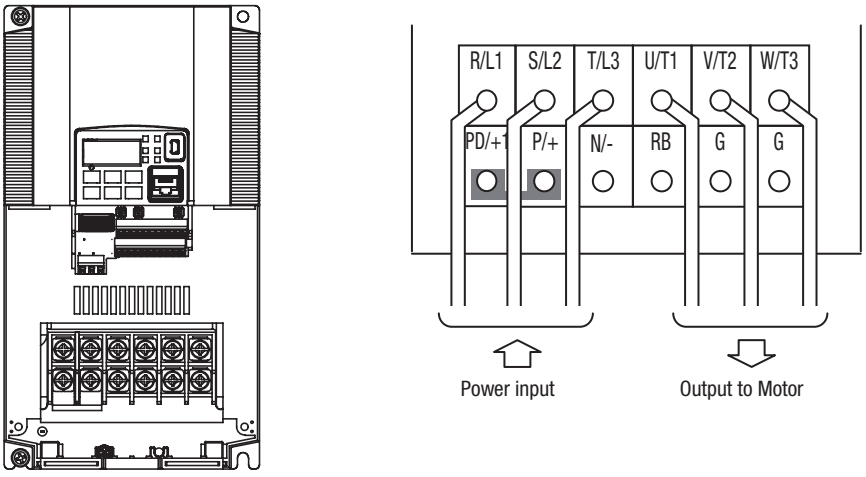

Three-phase 200 V 11 kW
Three-phase 400 V 11, 15 kW

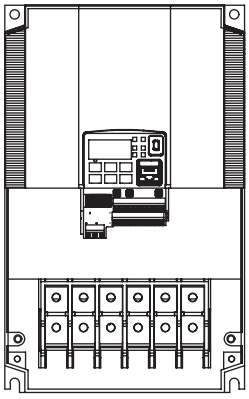

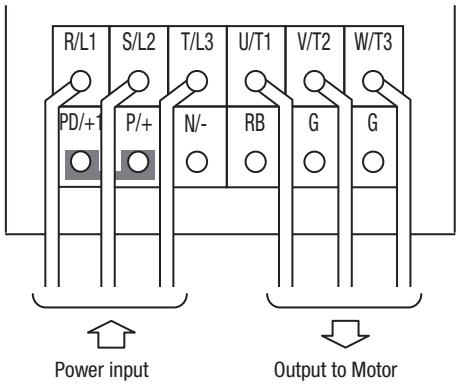

Three-phase 200 V 15 kW

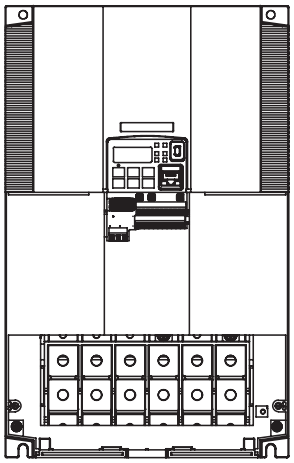

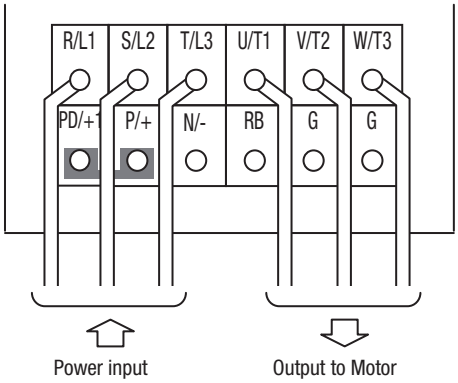

Note An inverter powered by a portable power generator may receive a distorted power waveform, overheating the generator. In general, the generator capacity should be five times that of the inverter (kVA).

⚠ **Caution** Be sure that the input voltage matches the inverter specifications:

- Single-phase 200 to 240 V 50/60 Hz(0.1 kW~2.2 kW) for 3G3MX2-AB models
- Three-phase 200 to 240 V 50/60 Hz (0.1 kW~15 kW) for 3G3MX2-A2 models
- Three-phase 380 to 480 V 50/60 Hz (0.4 kW~15 kW) for 3G3MX2-A4 models

⚠ **Caution** Be sure not to power a three-phase-only inverter with single phase power. Otherwise, there is the possibility of damage to the inverter and the danger of fire.

⚠ **Caution** Be sure not to connect an AC power supply to the output terminals. Otherwise, there is the possibility of damage to the inverter and the danger of injury and/or fire.

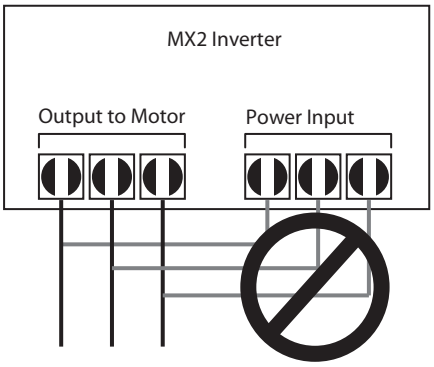

⚠ **Caution** Remarks for using ground fault interrupter breakers in the main power supply: Adjustable frequency inverter with integrated CE-filters and shielded (screened) motor cables have a higher leakage current toward earth GND. Especially at the moment of switching ON this can cause an inadvertent trip of ground fault interrupters. Because of the rectifier on the input side of the inverter there is the possibility to stall the switch-off function through small amounts of DC current.

Please observe the following:

- Use only short time-invariant and pulse current-sensitive ground fault interrupters with higher trigger current.
- Other components should be secured with separate ground fault interrupters.
- Ground fault interrupters in the power input wiring of an inverter are not an absolute protection against electric shock.

⚠ **Caution** Be sure to install a fuse in each phase of the main power supply to the inverter. Otherwise, there is the danger of fire.

⚠ **Caution** For motor leads, ground fault interrupter breakers and electromagnetic contactors, be sure to size these components properly (each must have the capacity for rated current and voltage). Otherwise, there is the danger of fire.

2-3-12 Wire the Inverter Output to Motor

Step 4 The process of motor selection is beyond the scope of this manual. However, it must be an AC induction motor with three phases. It should also come with a chassis ground lug. If the motor does not have three power input leads, stop the installation and verify the motor type. Other guidelines for wiring the motor include:

- Use an inverter-grade motor for maximum motor life (1600 V insulation).
- For standard motors, use the AC reactor accessory if the wiring between the inverter and motor exceeds 10 meters in length.

Simply connect the motor to the terminals [U/T1], [V/T2], and [W/T3] as shown in page 46 to page 49. This is a good time to connect the chassis ground lug on the drive as well. The motor chassis ground must also connect to the same point. Use a star ground (single-point) arrangement, and never daisy-chain the grounds (point-to-point).

- Check the mechanical integrity of each wire crimp and terminal connection.
- Replace the housing partition that covers access to the power connections.

Special care to be taken when motor is connected through long wires

2-3-13 Ground Terminal ⏚

To prevent electric shock, be sure to ground the Inverter and the motor.

The 200 V class should be connected to the ground terminal under Class D grounding conditions (conventional Class 3 grounding conditions: 100 Ω or less ground resistance), The 400 V class should be connected to the ground terminal under Class C grounding conditions (conventional special Class 3 grounding conditions: 10 Ω or less ground resistance).

For the ground cable, use the compatible cable or a cable with a larger diameter. Make the cable length as short as possible.

When several Inverters are connected, the ground cable must not be connected across several Inverters, and must not be looped. Otherwise, the Inverter and surrounding control machines may malfunction.

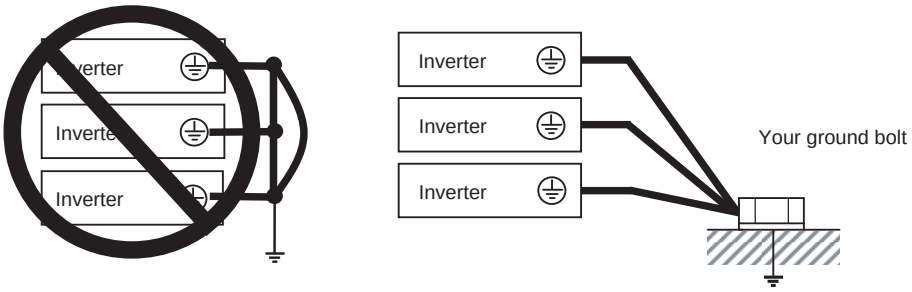

2-3-14 Logic Control Wiring

After completing the initial installation and powerup test in this chapter, you may need to wire the logic signal connector for your application. For new inverter users/applications, we highly recommend that you first complete the powerup test in this chapter without adding any logic control wiring. As a quick reference here is included the control connection diagram. But for more details about inputs and outputs configuration, please check SECTION 4 Operations and Monitoring.

MX2 control wiring quick reference (IP20)

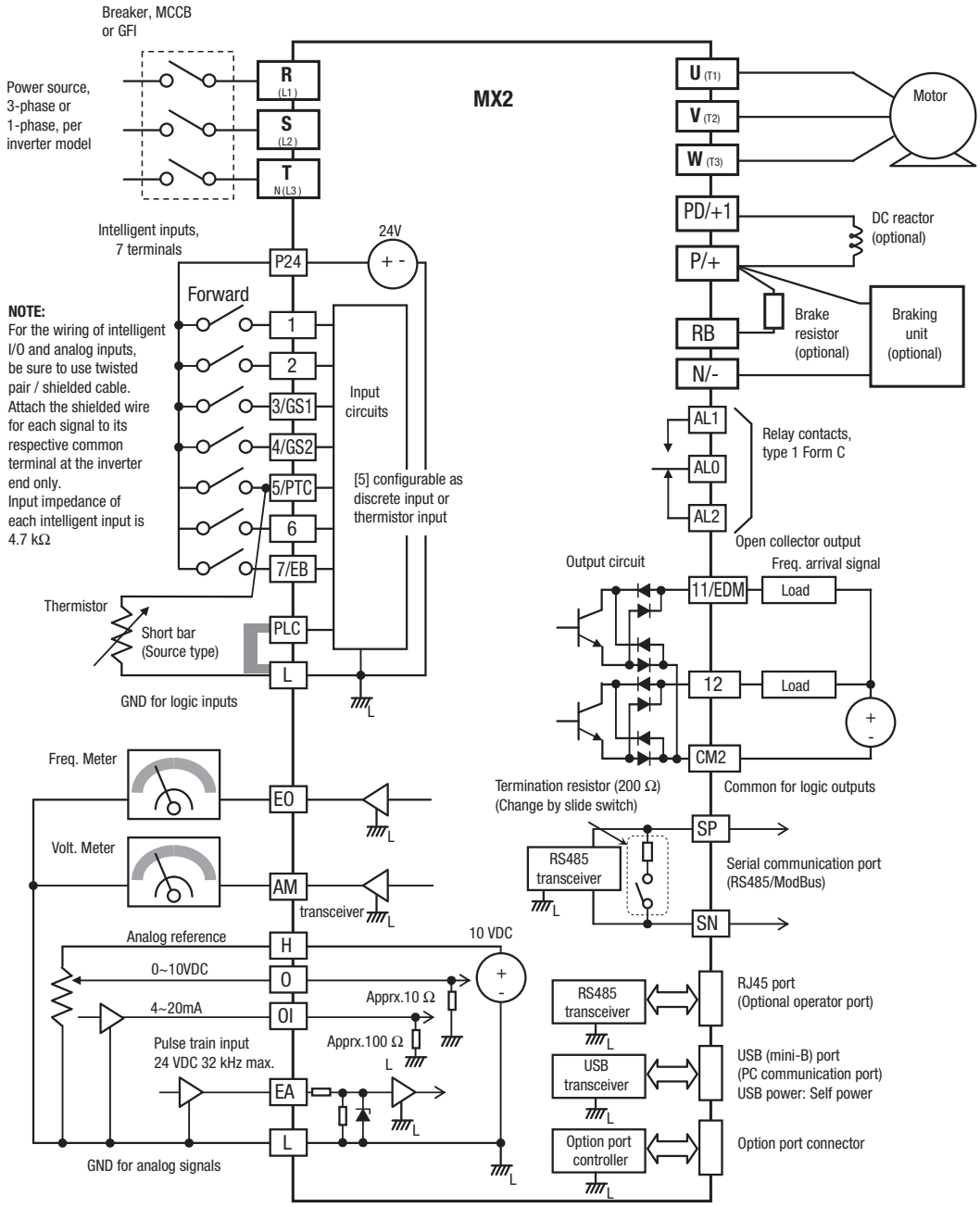

MX2 control wiring quick reference (IP54)

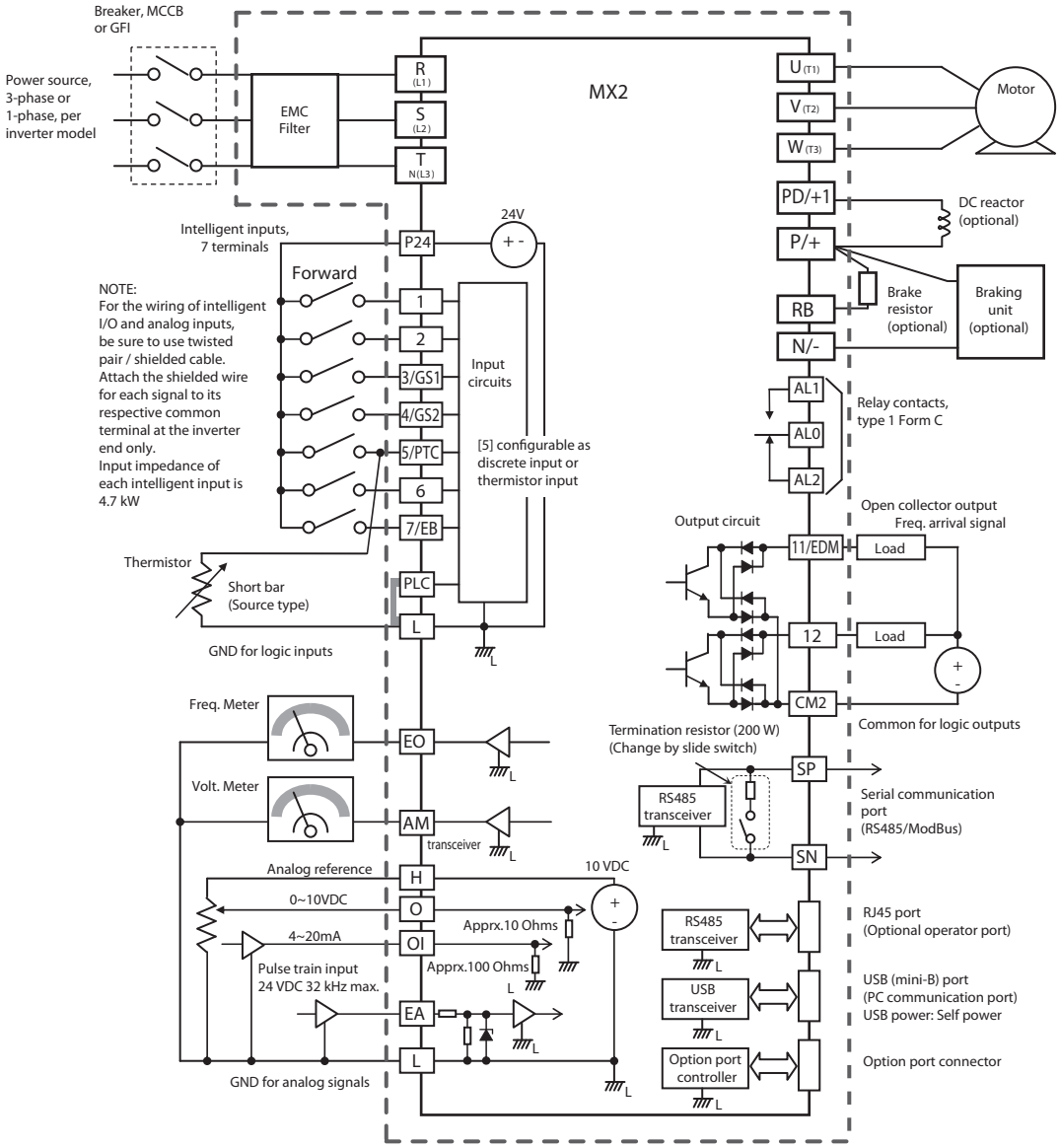

2-3-15 Name of Parts Inside the Terminal Block Cover

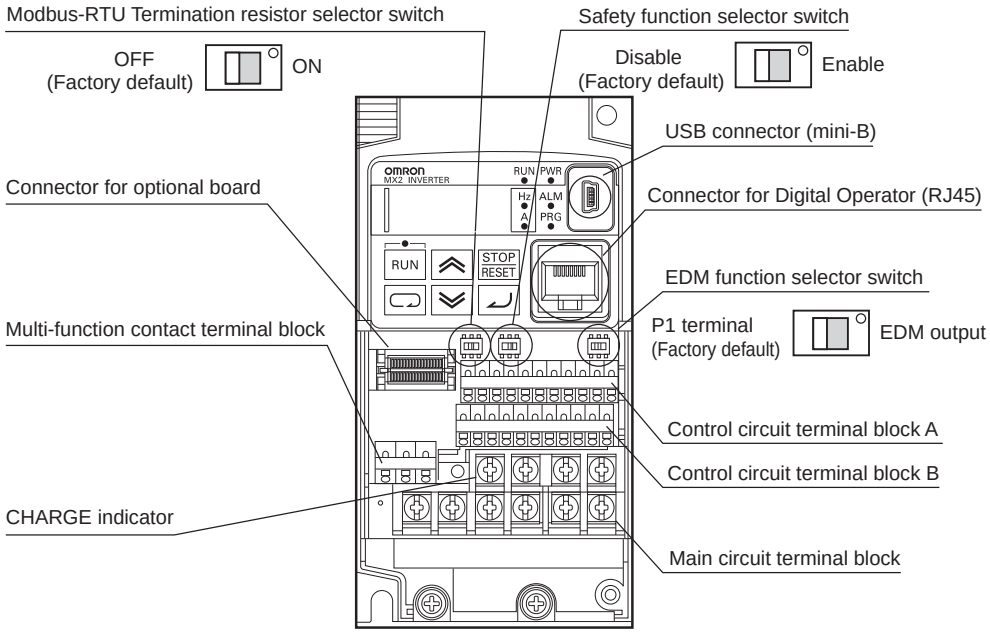

Name	Description
Modbus-RTU Termination resistor selector switch	Use this Terminal Resistor selector switch for RS-485 terminals on the control circuit terminal block.When this switch is turned ON, the internal 200 Ω Resistor is connected.
Safety function selector switch	Turn this switch ON when using the safety function. Turn OFF the power before turning this switch ON/OFF.
EDM function selector switch	Turn this switch ON when using the EDM output of the safety function. Turn OFF the power cable before turning this switch ON/OFF.
USB connector	Use this mini-B USB connector to connect a PC. Even when the Inverter is being operated by a PC, etc., via USB connection, it can still be operated using the Digital Operator.
Connector for Digital Operator	Use this connector to connect the Digital Operator.
Connector for optional board	Use this connector to mount the optional board. (The optional board will be released soon.)
Control circuit terminal blocks A and B	These terminal blocks are used to connect various digital/analog input and output signals for inverter control.
Multi-function contact terminal block	Use this SPDT contact terminal block for relay outputs.
Main circuit terminal block	Use this terminal block to connect an output to the motor and Bracking Resistor, etc. Also, use this terminal block to connect the inverter to the main power supply.
CHARGE indicator (Charge indicator LED)	This LED indicator is lit if the DC voltage of the main circuit (between terminals P/+2 and N/-) remains approx. 45 V or above after the power has been cut off. Before wiring, etc. confirm that the Charge LED indicator is turned OFF.

2-3-16 Uncover the Inverter Vents

Step 5 After mounting and wiring the inverter, remove any covers from the inverter housing. This includes material over the side ventilation ports.

⚠ **WARNING** Make sure the input power to the inverter is OFF. If the drive has been powered, leave it OFF for ten minutes before continuing.

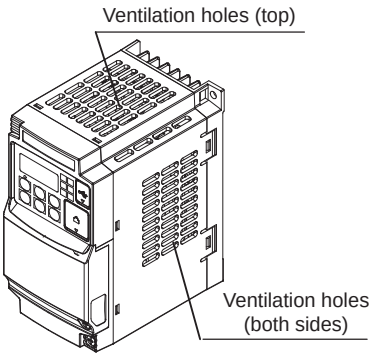

2-4 Powerup Test

Step 6 After wiring the inverter and motor, you're ready to do a powerup test. The procedure that follows is designed for the first-time use of the drive. Please verify the following conditions before conducting the powerup test:

- You have followed all the steps in this chapter up to this step.
- The inverter is new, and is securely mounted to a non-flammable vertical surface.
- The inverter is connected to a power source and a motor.
- No additional wiring of the inverter connectors or terminals has been done.
- The power supply is reliable, and the motor is a known working unit, and the motor nameplate ratings match the inverter ratings.
- The motor is securely mounted, and is not connected to any load.

2-4-1 Goals for the Powerup Test

If there are any exceptions to the above conditions at this step, please take a moment to take any measures necessary to reach this basic starting point. The specific goals of this powerup test are:

1. Verify that the wiring to the power supply and motor is correct.
2. Demonstrate that the inverter and motor are generally compatible.
3. Get an introduction to the use of the built-in operator keypad.

The powerup test gives you an important starting to ensure a safe and successful application of the Omron inverter. We highly recommend performing this test before proceeding to the other chapters in this manual.

2-4-2 Pre-test and Operational Precautions

The following instructions apply to the powerup test, or to any time the inverter is powered and operating. Please study the following instructions and messages before proceeding with the powerup test.

1. The power supply must have fusing suitable for the load. Check the fuse size chart presented in Step 5, if necessary.
2. Be sure you have access to a disconnect switch for the drive input power if necessary. However, do not turn OFF power during inverter operation unless it is an emergency.

⚠ **Caution** The heat sink fins will have a high temperature. Be careful not to touch them. Otherwise, there is the danger of getting burned.

⚠ **Caution** The operation of the inverter can be easily changed from low speed to high speed. Be sure to check the capability and limitations of the motor and machine before operating the inverter. Otherwise, there is the danger of injury.

⚠ **Caution** If you operate a motor at a frequency higher than the inverter standard default setting (50 Hz/60 Hz), be sure to check the motor and machine specifications with the respective manufacturer. Only operate the motor at elevated frequencies after getting their approval. Otherwise, there is the danger of equipment damage and/or injury.

⚠ **Caution** Check the following before and during the Powerup test. Otherwise, there is the danger of equipment damage.

- Is the shorting bar between the [+1] and [+] terminals installed? DO NOT power or operate the inverter if the jumper is removed.
- Is the direction of the motor rotation correct?
- Did the inverter trip during acceleration or deceleration?
- Were the rpm and frequency meter readings as expected?
- Were there any abnormal motor vibration or noise?

2-4-3 Powering the Inverter

If you have followed all the steps, cautions and warnings up to this point, you're ready to apply power. After doing so, the following events should occur:

- The *POWER* LED will illuminate.
- The numeric (7-segment) LEDs will display a test pattern, then stop at 0.0.
- The ***Hz*** LED will be ON.

If the motor starts running unexpectedly or any other problem occurs, press the STOP key. Only if necessary should you remove power to the inverter as a remedy.

Note If the inverter has been previously powered and programmed, the LEDs (other than the POWER LED) may illuminate differently than as indicated above. If necessary, you can initialize all parameters to the factory default settings. See "*Restoring Factory Default Settings*" on page 279.

2-5 Using the Front Panel Keypad

Please take a moment to familiarize yourself with the keypad layout shown in the figure below. The display is used in programming the inverter's parameters, as well as monitoring specific parameter values during operation.

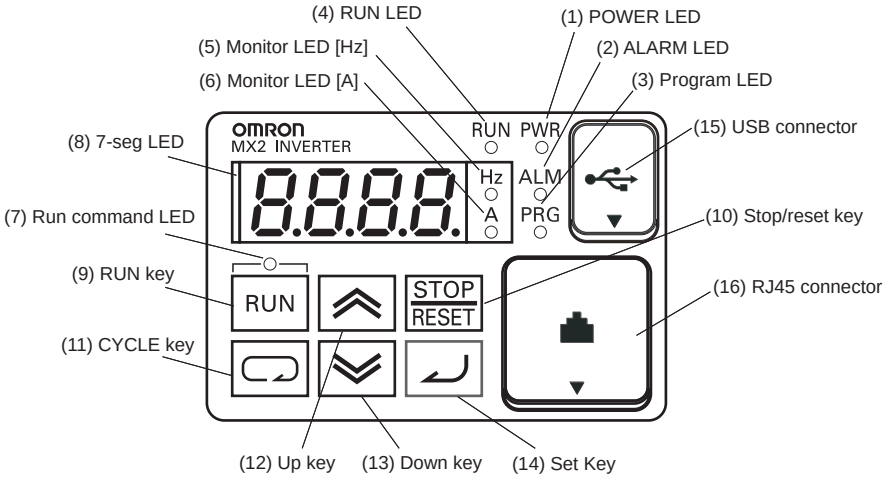

Items	Contents
(1) POWER LED	Turns ON (Green) while the inverter is powered up.
(2) ALARM LED	Turns ON (Red) when the inverter trips.
(3) Program LED	· Turns ON (Green) when the display shows changeable parameter. · Blinks when there is a mismatch in setting.
(4) RUN LED	Turns ON (Green) when the inverter is driving the motor.
(5) Monitor LED [Hz]	Turns ON (Green) when the displayed data is frequency related.
(6) Monitor LED [A]	Turns ON (Green) when the displayed data is current related.
(7) Run command LED	Turns ON (Green) when a Run command is set to the operator. (Run key is effective.)
(8) 7-seg LED	Shows each parameter, monitors etc.
(9) Run key	Makes inverter run.
(10) Stop/reset key	· Makes inverter decelerates to a stop. · Reset the inverter when it is in trip situation
(11) CYCLE key	· Go to the top of next function group, when a function mode is shown · Cancel the setting and return to the function code, when a data is shown · Moves the cursor to a digit left, when it is in digit-to-digit setting mode · Pressing for 1 second leads to display data of d001, regardless of current display.
(12) Up key (13) Down key	· Increase or decrease the data. · Pressing the both keys at the same time gives you the digit-to-digit edit.
(14) SET key	· Go to the data display mode when a function code is shown · Stores the data and go back to show the function code, when data is shown. · Moves the cursor to a digit right, when it is in digit-to-digit display mode
(15) USB connector	Connect USB connector (mini-B) for using PC communication
(16) RJ45 connector	Connect RJ45 jack for remote operator

2-5-1 Keys, Modes, and Parameters

The purpose of the keypad is to provide a way to change modes and parameters. The term *function* applies to both monitoring modes and parameters. These are all accessible through *function codes* that are primary 4-character codes. The various functions are separated into related groups identifiable by the left-most character, as the table shows.

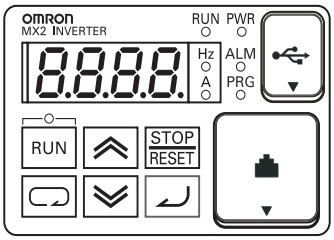

Function Group	Type (Category) of Function	Mode to Access	PRG LED Indicator
“d”	Monitoring functions	Monitor	❍
“F”	Main profile parameters	Program	●
“A”	Standard functions	Program	●
“b”	Fine tuning functions	Program	●
“C”	Intelligent terminal functions	Program	●
“H”	Motor constant related functions	Program	●
“P”	Pulse train input, torque, Drive Programming, and communication related functions	Program	●
“U”	User selected parameters	Program	●
“E”	Error codes	–	–

2-5-2 Keypad Navigation Map

The MX2 Series inverter drives have many programmable functions and parameters. Chapter 3 will cover these in detail, but you need to access just a few items to perform the powerup test. The menu structure makes use of function codes and parameter codes to allow programming and monitoring with only a 4-digit display and keys and LEDs. So, it is important to become familiar with the basic navigation map of parameters and functions in the diagram below. You may later use this map as a reference.

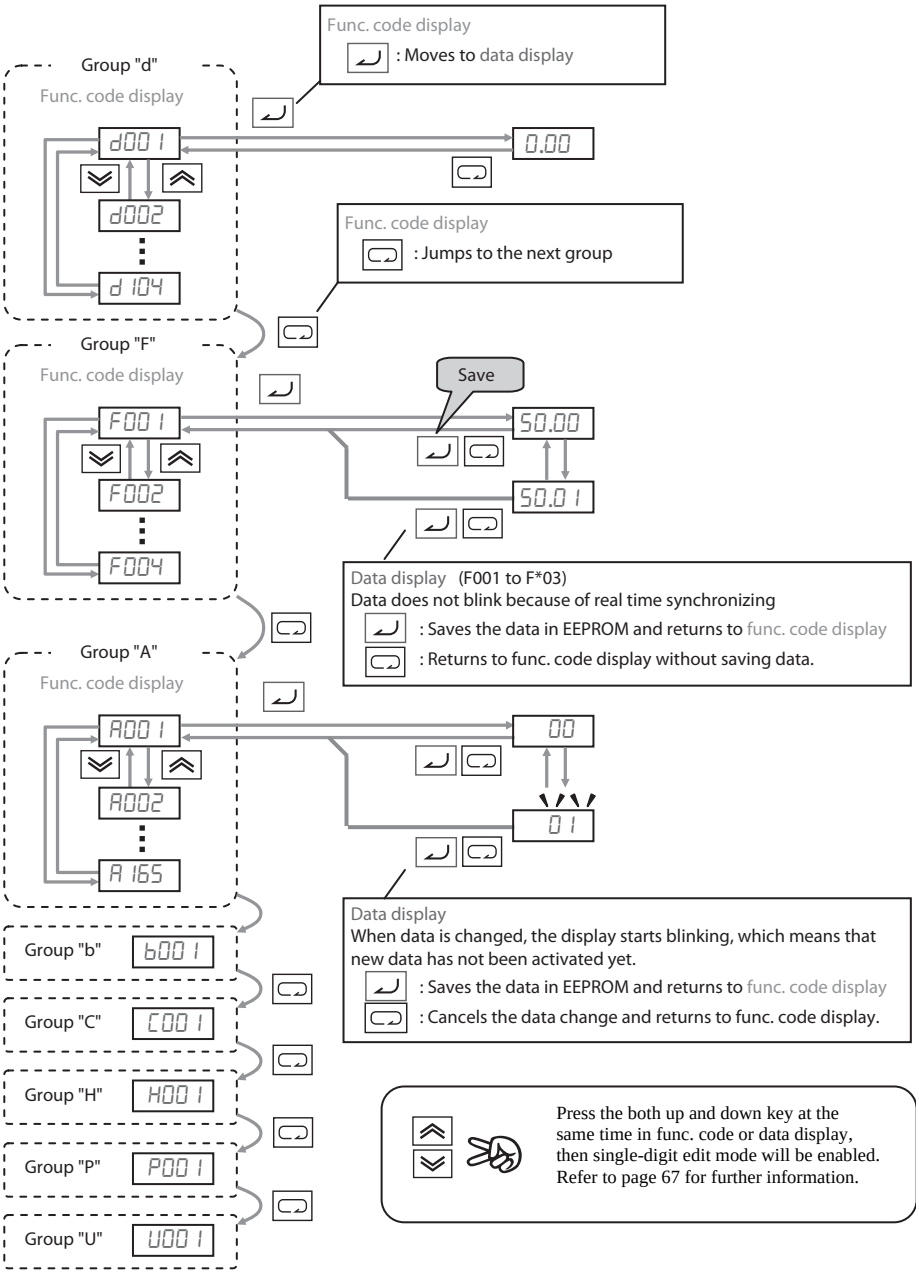

Note Pressing the key will make the display go to the top of next function group, regardless the display contents. (e.g. A021 –> –> b001)

[Setting example]

After power ON, changing from 0.00 display to change the b083 (carrier frequency) data.

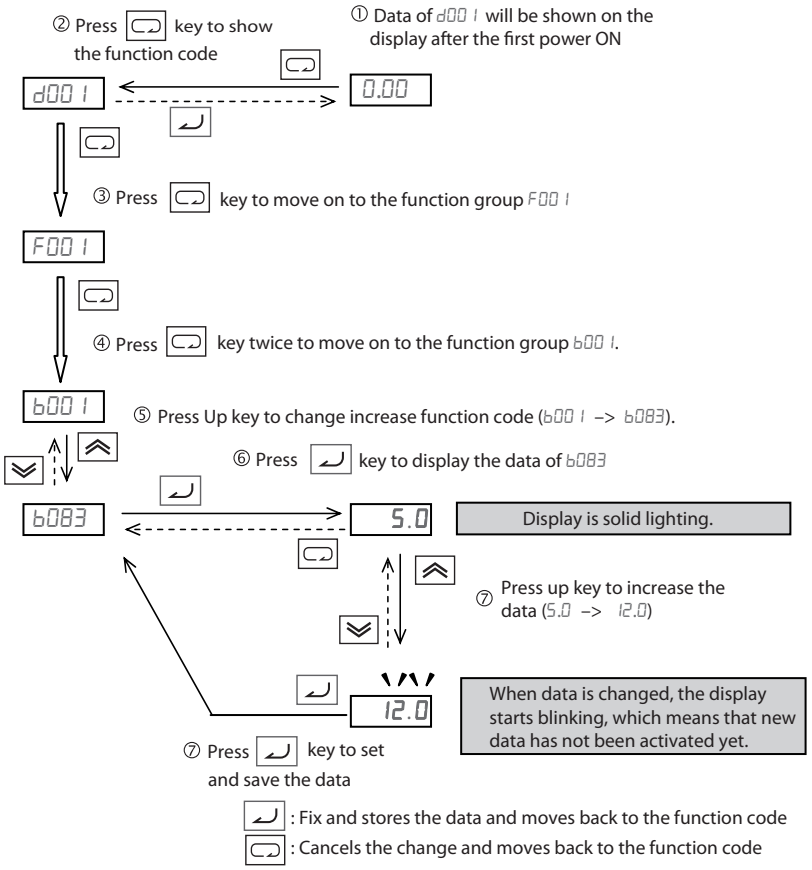

Note Function code **bxxx** are for monitor and not possible to change.
Function codes **Fxxx** other than **FHHH** are reflected on the performance just after changing the data (before pressing key), and there will be no blinking.

	When a function code is shown…	When a data is shown…
key	Move on to the next function group	Cancels the change and moves back to the function code
key	Move on to the data display	Fix and stores the data and moves back to the function code
key	Increase function code	Increase data value
key	Decrease function code	Decrease data value

Note Keep pressing for more than 1 second leads to d001 display, regardless the display situation. But note that the display will circulates while keep pressing the key because of the original function of the key.
(e.g. F001 –> A001 –> b001 –> C001 –> … –> displays 50.00 after 1 second)

2-5-3 Selecting Functions and Editing Parameters

To prepare to run the motor in the powerup test, this section will show how to configure the necessary parameters:

1. Select the digital operator as the source of motor speed command (A001=02).
2. Select the digital operator as the source of the RUN command (A002=02).
3. Set the motor base frequency (A003) and AVR voltage of the motor (A082).
4. Set the motor current for proper thermal protection (b012).
5. Set the number of poles for the motor (H004).

The following series of programming tables are designed for successive use. Each table uses the previous table's final state as the starting point. Therefore, start with the first and continue programming until the last one. If you get lost or concerned that some of the other parameters setting may be incorrect, refer to "*Restoring Factory Default Settings*" on page 279.

Prepare to Edit Parameters – This sequence begins with powering ON the inverter, then it shows how to navigate to the "A" Group parameters for subsequent settings. You can also refer to the "*Keypad Navigation Map*" on page 60 for orientation throughout the steps.

Action	Display	Func./Parameter
Turn ON the inverter	0.0	Inverter output frequency displayed (0Hz in stop mode)
Press the [FUNC] key	d001	"d" group selected
Press the [FUNC] key 2 times	A001	"A" group selected

1. Select the digital operator for Speed Command – The inverter output frequency can be set from several sources, including an analog input, memory setting, or the network, for example. The powerup test uses the keypad as the speed control source for your convenience. Note that the default setting depends on the country.

Action	Display	Func./Parameter
(Starting point)	A001	"A" Group selected Speed command source setting
Press the [ENT] key	01	00... Potentiometer of ext. operator 01... Control terminals 02... Digital operator (F001) 03... ModBus network etc.
Press the [▲] / [▼] key to select	02	02... Digital operator (selected)
Press the [ENT] key to store	A001	Stores parameter, returns to "A001"

2. Select the digital operator for RUN Command – To RUN command causes the inverter to accelerate the motor to the selected speed. The Run command can arrive from various sources, including the control terminals, the Run key on the keypad or the network. In the figure to the right, notice the Run Key Enable LED, just above the Run key. If the LED is ON, the Run key is already selected as the source, and you may skip this step. Note that the default setting depends on the country.

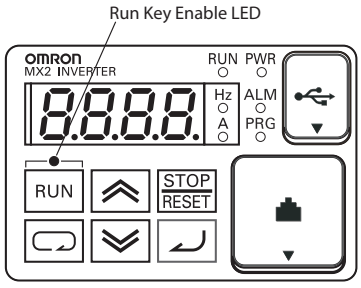

If the Potentiometer Enable LED is OFF, follow these steps below (the table resumes action from the end of the previous table).

Action	Display	Func./Parameter
(Starting point)	A001	Speed command source setting
Press the ⋀ key	A002	Run command source setting
Press the ↵ key	01	01... Control terminals 02... Digital operator 03... ModBus network input etc.
Press the ⋀ / ⋁ key to select	02	02... Digital operator (selected)
Press the ↵ key to store	A002	Stores parameter, returns to "A002"

Note After completing the steps above, the Run Key Enable LED will be ON. This does not mean the motor is trying to run; it means that the RUN key is now enabled. DO NOT press the RUN key at this time – complete the parameter setup first.

3. Set the Motor Base Frequency and AVR voltage of the motor – The motor is designed to operate at a specific AC frequency. Most commercial motors are designed for 50/60 Hz operation. First, check the motor specifications. Then follow the steps below to verify the setting or correct it for your motor. DO NOT set it greater than 50/60 Hz unless the motor manufacturer specifically approves operation at the higher frequency.

Action	Display	Func./Parameter
(Starting point)	A002	Run command source setting
Press the ⋀ key once	A003	Base frequency setting
Press the ↵ key	60.0 or 50.0	Default value for the base frequency US = 60 Hz, Europe = 50 Hz
Press the ⋀ / ⋁ key to select	60.0	Set to your motor specs (your display may be different)
Press the ↵ key	A003	Stores parameter, returns to "A003"

⚠ **Caution** If you operate a motor at a frequency higher than the inverter standard default setting (50 Hz/60 Hz), be sure to check the motor and machine specifications with the respective manufacturer. Only operate the motor at elevated frequencies after getting their approval. Otherwise, there is the danger of equipment damage.

Set the AVR Voltage Setting – The inverter has an Automatic Voltage Regulation (AVR) function. It adjusts the output voltage to match the motor's nameplate voltage rating. The AVR smoothes out fluctuation in the input power source, but note that it does not boost the voltage in the event of a brown-out. Use the AVR setting (A082) that most closely matches the one for your motor.

- 200 V class: 200 / 215 / 220 / 230 / 240 VAC
- 400 V class: 380 / 400 / 415 / 440 / 460 / 480 VAC

To set the motor voltage, follow the steps on the following table.

Action	Display	Func./Parameter
(Starting point)	A003	Base frequency setting
Press the ▲▲ key and hold until –>	A082	AVR voltage select
Press the RUN key	A230 or A400	Default value for AVR voltage: 200 V class= 230 VAC 400 V class= 400 VAC (HFE) = 460 VAC (HFU)
Press the ▲▲ / ▼▼ key to select	A215	Set to your motor specs (your display may be different)
Press the RUN key	A082	Stores parameter, returns to "A082"

4. Set the Motor Current – The inverter has thermal overload protection that is designed to protect the inverter and motor from overheating due to an excessive load. The inverter's uses the motor's current rating to calculate the time-based heating effect. This protection depends on using correct current rating for your motor. The level of electronic thermal setting, parameter b012, is adjustable from 20% to 100% of the inverter's rated current. A proper configuration will also help prevent unnecessary inverter trip events.

Read the motor's current rating on its manufacturer's nameplate. Then follow the steps below to configure the inverter's overload protection setting.

Action	Display	Func./Parameter
(Starting point)	A082	AVR voltage select
Press the ↺ key	b001	First "B" Group parameter selected
Press the ▲▲ key and hold until –>	b012	Level of electronic thermal setting
Press the RUN key	b160	Default value will be 100% of inverter rated current
Press the ▲▲ / ▼▼ key to select	b140	Set to your motor specs (your display may be different)
Press the RUN key	b012	Stores parameter, returns to "b012"

5. Set the Number of Motor Poles – The motor's internal winding arrangement determines its number of magnetic poles. The specification label on the motor usually indicates the number of poles. For proper operation, verify the parameter setting matches the motor poles. Many industrial motors have four poles, corresponding to the default setting in the inverter (H004).

Follow the steps in the table below to verify the motor poles setting and change if necessary (the table resumes action from the end of the previous table.)

Action	Display	Func./Parameter
(Starting point)	b012	Level of electronic thermal setting
Press the [PRG] key	H001	"H" Group selected
Press the [▲] key three times	H004	Motor poles parameter
Press the [ENT] key	H004	2 = 2 poles 4 = 4 poles (default) 6 = 6 poles 8 = 8 poles 10 = 10 poles
Press the [▲] / [▼] key to select	H004	Set to your motor specs (your display may be different)
Press the [ENT] key	H004	Stores parameter, returns to "H004"

This step concludes the parameter setups for the inverter. You are almost ready to run the motor for the first time!

⚠ **Tip** If you became lost during any of these steps, first observe the state of the PRG LED. Then study the "Keypad Navigation Map" on page 60 to determine the current state of the keypad controls and display. As long as you do not press the [ENT] key, no parameter will be changed by keypad entry errors. Note that power cycling the inverter causes it to power up Monitor Mode, displaying the value for d001 (output frequency).

The next section will show you how to monitor a particular parameter from the display. Then you will be ready to run the motor.

2-5-4 Monitoring Parameters with the Display

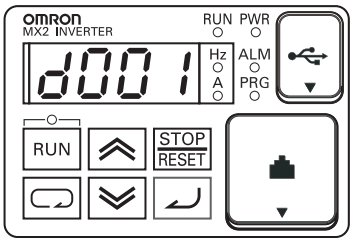

After using the keypad for parameter editing, it's a good idea to switch the inverter from Program Mode to Monitor Mode. The PRG LED will be OFF, and the Hertz or Ampere LED indicates the display units.

For the powerup test, monitor the motor speed indirectly by viewing the inverter's output frequency. The *output frequency* must not be confused with *base frequency* (50/60 Hz) of the motor, or the *carrier frequency* (switching frequency of the inverter, in the kHz range). The monitoring functions are in the "D" list, located near the top left of the "*Keypad Navigation Map*" on page 60.

Output frequency (speed) set – Resuming keypad operation from the previous table, follow the steps below.

Action	Display	Func./Parameter
(Starting point)	H004	Motor poles parameter
Press the key four times	F001	"F" is selected
Press the key	0.00	Set frequency displayed

2-5-5 Running the Motor

If you have programmed all the parameters up to this point, you're ready to run the motor! First, review this checklist:

1. Verify the power LED is ON. If not, check the power connections.
2. Verify the Run Key Enable LED is ON. If it is OFF, check the A002 setting.
3. Verify the PRG LED is OFF. If it is ON, review the instructions above.
4. Make sure the motor is disconnected from any mechanical load.
5. Now, press the RUN key on the keypad. The RUN LED will turn ON.
6. Press the key for a few seconds. The motor should start turning.
7. Press the STOP key to stop the motor rotation.

2-5-6 Single-Digit Edit Mode

If a target function code or data is far from current data, using the single-digit edit mode makes it quicker. Pressing the up key and down key at the same time leads you to go into the digit-to-digit changing mode.

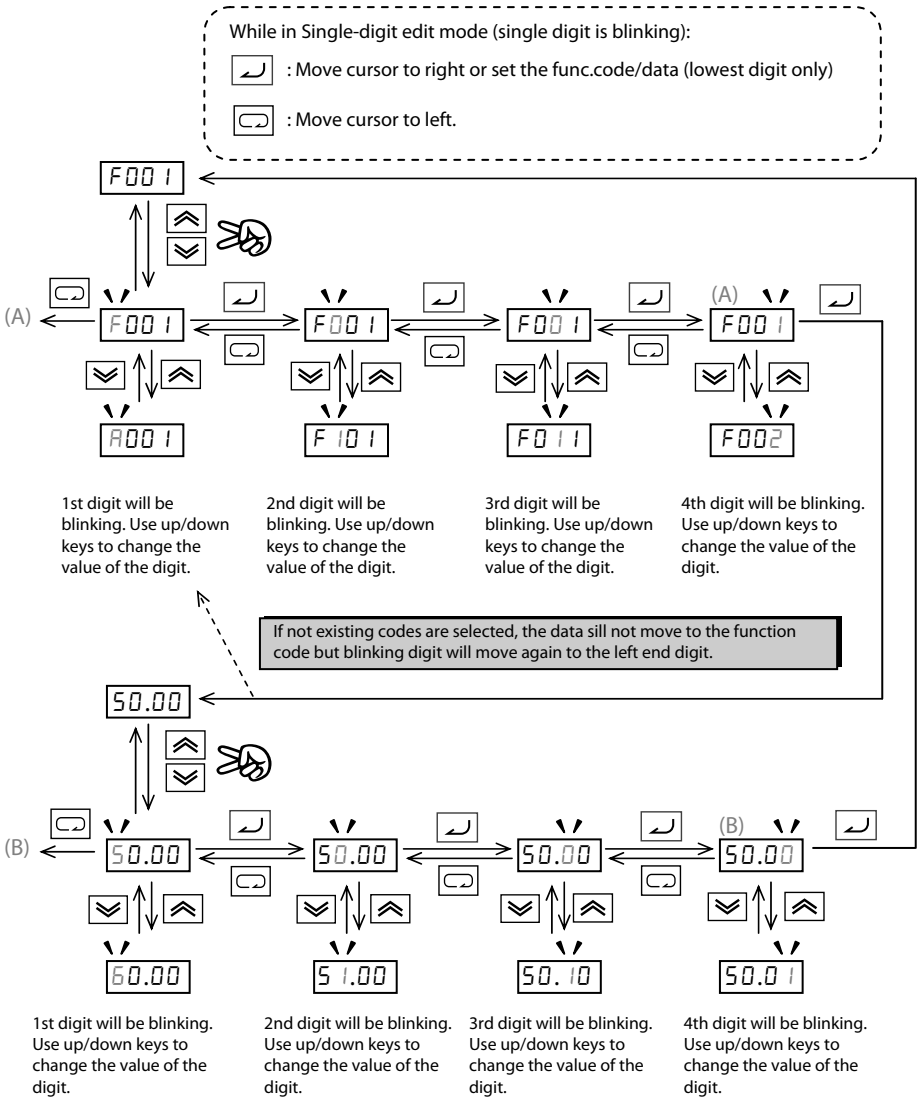

Note When pressing ⊂⊃ with cursor on the highest digit, the cursor will jump to the lowest digit. ((A) and (B) in above figure.)

Note When pressing up key and down key at the same time in single-digit edit mode, the single-digit edit mode is disabled and goes back to normal mode.

2-5-7 Powerup Test Observations and Summary

Step 7 Reading this section will help you make some useful observations when first running the motor.

Error Codes – If the inverter displays an error code (format is "E xx"), see "*Monitoring Trip Events, History, & Conditions*" on page 273 to interpret and clear the error.

Acceleration and Deceleration – The MX2 inverter has programmable acceleration and deceleration value. The test procedure left these at the default value, 10 seconds. You can observe this by setting the frequency F001 at about half speed before running the motor. Then press RUN, and the motor will take 5 seconds to reach a steady speed. Press the STOP key to see a 5 second deceleration to a STOP.

State of Inverter at Stop – If you adjust the motor's speed to zero, the motor will slow to a near stop, and the inverter turns the outputs OFF. The high-performance MX2 can rotate at a very slow speed with high torque output, but not zero (must use servo systems with position feedback for that feature). This characteristic means you must use a mechanical brake for some applications.

Interpreting the Display – First, refer to the output frequency display readout. The maximum frequency setting (parameter A044) defaults to 50 Hz or 60 Hz (Europe and United States, respectively) for your application.

Example: Suppose a 4-pole motor is rated for 60 Hz operation, so the inverter is configured to output 60 Hz at full scale. Use the following formula to calculate the rpm.

$$\text{Speed in RPM} = \frac{\text{Frequency} \times 60}{\text{Pairs of poles}} = \frac{\text{Frequency} \times 120}{\#\text{of poles}} = \frac{60 \times 120}{4} = 1800 \text{ RPM}$$

The theoretical speed for the motor is 1800 rpm (speed of torque vector rotation). However, the motor cannot generate torque unless its shaft turns at a slightly different speed. This difference is called *slip*. So it's common to see a rated speed of approximately 1750 rpm on a 60 Hz, 4-pole motor. Using a tachometer to measure shaft speed, you can see the difference between the inverter output frequency and the actual motor speed. The slip increases slightly as the motor's load increases. This is why the inverter output value is called "frequency", since it is not exactly equal to motor speed.

Run/Stop Versus Monitor/Program Modes – The Run LED on the inverter is ON in Run Mode, and OFF in Stop Mode. The Program LED is ON when the inverter is in Program Mode, and OFF for Monitor Mode. All four mode combinations are possible. The diagram to the right depicts the modes and the mode transitions via keypad.

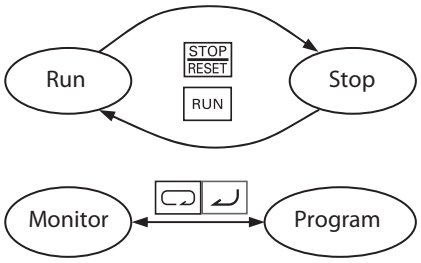

Note Some factory automation devices such as PLCs have alternative Run/Program modes; the device is in either one mode or the other. In the Omron inverter, however, Run Mode alternates with Stop Mode, and Program Mode alternates with Monitor Mode. This arrangement lets you program some value while the inverter is operating – providing flexibility for maintenance personnel.

SECTION 3
Configuring Drive Parameters

3-1 Choosing a Programming Device

3-1-1 Introduction

Omron variable frequency drives (inverters) use the latest electronics technology for getting the right AC waveform to the motor at the right time. The benefits are many, including energy savings and higher machine output or productivity. The flexibility required to handle a broad range of applications has required ever more configurable options and parameters - inverter are now a complex industrial automation component. And this can make a product seem difficult to use, but the goal of this chapter is to make this easier for you.

As the powerup test in 2-4 *Powerup Test* demonstrated, you do not have to program very many parameters to run the motor. In fact, most applications would benefit only from programming just a few, specific parameters. This chapter will explain the purpose of each set of parameters, and help you choose the ones that are important to your application.

If you are developing a new application for the inverter and a motor, finding the right parameters to change is mostly an exercise in optimization. Therefore, it is okay to begin running the motor with a loosely tuned system. By making specific, individual changes and observing their effects, you can achieve a finely tuned system.

3-1-2 Introduction of Inverter Programming

The front panel keypad is the first and best way to get to know the inverter's capabilities. Every function or programmable parameter is accessible from the keypad.

3-2 Using the Keypad Devices

The MX2 Series inverter front keypad contains all the elements for both monitoring and programming parameters. The keypad layout is pictured below. All other programming devices for the inverter have a similar key arrangement and function.

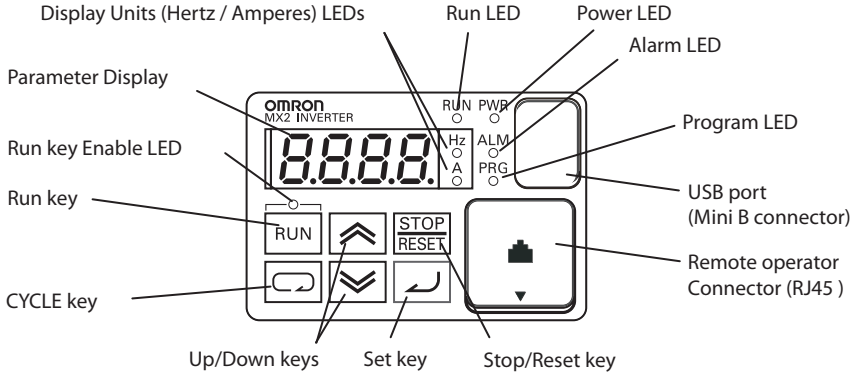

3-2-1 Key and Indicator Legend

- **Run LED** - ON when the inverter output is ON and the motor is developing torque (Run Mode), and OFF when the inverter output is OFF (Stop Mode).
- **Program LED** - This LED is ON when the inverter is ready for parameter editing (Program Mode). It is OFF when the parameter display is monitoring data (Monitor Mode).
- **Run Key Enable LED** - This LED is ON when the inverter is ready to respond to the Run key, OFF when the Run key is disabled.
- **Run Key** - Press this key to run the motor (the Run Enable LED must be ON first). Parameter F004, Keypad Run Key Routing, determines whether the Run key generates a Run FWD or Run REV command.
- **Stop/Reset Key** - Press this key to stop the motor when it is running (uses the programmed deceleration rate). This key will also reset an alarm that has tripped.
- **Parameter Display** - A 4-digit, 7-segment display for parameters and function codes.
- **Display Units, Hertz/Amperes** - One of these LEDs will be ON to indicate the units associated with the parameter display.
- **Power LED** - This is ON when the power input to the inverter is ON.
- **Alarm LED** - ON when an inverter trip is active (alarm relay contact will be closed).
- **Cycle Key** - This key is used to escape from the current situation.
- **Up/Down keys** - Use these keys alternatively to move up or down the lists of parameter and functions shown in the display, and increment/decrement values.
- **Set key** - This key is used to navigate through the lists of parameters and functions for setting and monitoring parameter values. When the unit is in Program Mode and you have edited a parameter value, press the Set key to write the new value to the EEPROM.

3-2-2 Operational Modes

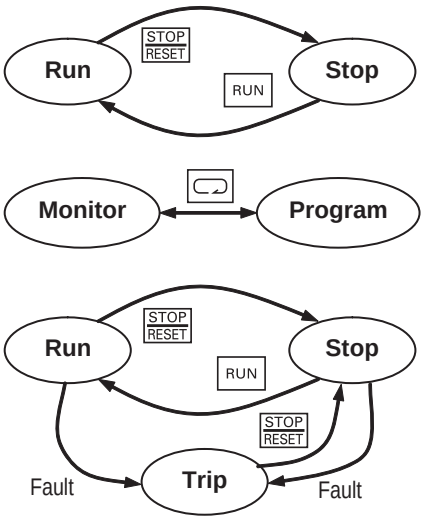

The RUN and PRG LEDs tell just part of the story; Run Mode and Program Modes are independent modes, not opposite modes. In the state diagram to the right, Run alternates with Stop, and Program Mode alternates with Monitor Mode. This is a very important ability, for it shows that a technician can approach a running machine and change some parameters without shutting down the machine.

The occurrence of a fault during operation will cause the inverter to enter Trip Mode as shown. An event such as an output overload will cause the inverter to exit the Run Mode and turn OFF its output to the motor. In the Trip Mode, any request to run the motor is ignored. You must clear the error by pressing the Stop/Reset switch. See *6-2 Monitoring Trip Events, History, & Conditions* on page 273.

3-2-3 Run Mode Edit

The inverter can be in Run Mode (inverter output is controlling motor) and still allow you to edit certain parameters. This is useful in applications that must run continuously, you need some inverter parameter adjustment.

	Run Mode Edit	
	×	
	✓	

The parameter tables in this chapter have a column titled “Run Mode Edit”. An Ex mark × means the parameter cannot be edited; a Check mark ✓ means the parameter can be edited. The Soft lock selection (parameter b031) determines when the Run Mode access permission is in effect and access permission in other conditions, as well. It is the responsibility of the user to choose a useful and safe software lock setting for the inverter operating conditions and personnel. Please refer to *3-6-5 Software Lock Mode* on page 130 for more information.

3-2-4 Control Algorithms

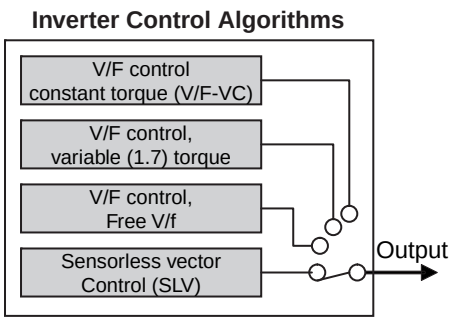

The motor control program in the MX2 inverter has two sinusoidal PWM switching algorithms. The intent is that you select the best algorithm for the motor and load characteristics of your application. Both algorithms generate the frequency output in a unique way. Once configured, the algorithm is the basis for other parameter settings as well (see *3-5-4 Torque Control Algorithms* on page 101). Therefore, choose the best algorithm early in your application design process.

3-2-5 Dual Rate Selection

The MX2 series inverter has Dual Rate, so that it can work in two different types of load condition, Constant torque application and Variable torque application. Select parameter b049 depending on your application.

"A" Function			Run Mode Edit	Defaults	
Func. Code	Name	Description		EU	Units
b049	Dual rate selection	Two options; select codes: 00 ...CT (Constant torque / HD) 01 ...VT (Variable torque / ND)	–	00	-

When changed, the rated output current and related items are changed automatically. Differences between HD and ND are described below.

	HD	ND
Usage	For heavy load with high torque required at start, acceleration or deceleration	For normal load without high torque required.
Applications	Elevators, cranes, conveyers, etc.	fans, pumps, air-conditionings
Rated current (example)	1.0 A (3-phase 200 V 0.1 kW)	1.2 A (3-phase 200 V 0.1 kW)
Overload current	150% 60 sec.	120% 60 sec.

Initial values of HD and ND are different shown as below table. Be sure to note that when the dual rate selection b049 is changed those initial values are also changed except H003/H203. (Even if currently set value is within the range of both HD and ND, data is initialized when b049 is changed.)

Name	Func. code	HD		ND	
		Range	initial data	Range	initial data
V/f characteristics selection	A044 A244	00: Const. torque 01: Reduced torque 02: Free V/F 03: SLV	00: Const. tq.	00: Const. torque 01: Reduced torque 02: Free V/F	00: Const. tq.
DC injection braking power	A054	0 to 100 (%)	50 (%)	0 to 70 (%)	50 (%)
Startup DC injection braking power	A057	0 to 100 (%)	0 (%)	0 to 70 (%)	0 (%)
DC injection braking carrier frequency	A059	2.0 to 15.0 (kHz)	5.0 (kHz)	2.0 to 10.0 (kHz)	2.0 (kHz)
Overload limit level	b022 b222	0.32 x Rated current to 3.20 x Rated current	1.50 x Rated current (A)	0.38 x Rated current to 2.85 x Rated current	1.20 x Rated current (A)
Overload limit level 2	b025				
Carrier frequency	b083	2.0 to 15.0 (kHz)	10.0 (kHz)	2.0 to 10.0 (kHz)	2.0 (kHz)
Motor capacity selection	H003 H203	0.10 to 18.50 (kHz)	Depends on type	0.10 to 18.50 (kHz)	One size up than HD

When ND is selected, following parameters are not displayed.

Func. code	Name	Func. code	Name
d009	Torque reference monitor	H020/H220	Motor parameter R1
d010	Torque bias monitor	H021/H221	Motor parameter R2
d012	Output torque monitor	H022/H222	Motor parameter L
b040	Torque limit selection	H023/H223	Motor parameter Io
b041	Torque limit 1	H024/H224	Motor parameter J
b042	Torque limit 2	H030/H230	Motor parameter R1 (auto-tuning data)
b043	Torque limit 3	H031/H231	Motor parameter R2 (auto-tuning data)
b044	Torque limit 4	H032/H232	Motor parameter L (auto-tuning data)
b045	Torque LADSTOP selection	H033/H233	Motor parameter Io (auto-tuning data)
b046	Reverse rotation prevention selection	H034/H234	Motor parameter J (auto-tuning data)

Func. code	Name	Func. code	Name
C054	Over-torque/under-torque selection	P033	Torque reference input selection
C055	Overtorque level (FW, PW)	P034	Torque reference setting
C056	Overtorque level (RV, RG)	P036	Torque bias mode
C057	Overtorque level (RV, PW)	P037	Torque bias value
C058	Overtorque level (FW, RG)	P038	Torque bias polarity selection
C059	Signal output mode of Over/under torque	P039	Speed limit value in torque control (FW)
H001	Auto-tuning selection	P040	Speed limit value in torque control (RV)
H002/H202	Motor parameter selection	P041	Speed/torque control switching time
H005/H205	Speed response	-	-

When ND is selected, following functions are not displayed in intelligent terminals.

Intelligent input terminals		Intelligent output terminals	
40: TL	Torque limit enabled	07: OTQ	Overtorque
41: TRQ1	Torque limit switching 1	10: TRQ	Torque limit
42: TRQ2	Torque limit switching 2	-	-
52: ATR	Torque command input permission	-	-

3-3 "D" Group: Monitoring Functions

You can access important parameter values with the "D" Group monitoring functions, whether the inverter is in Run Mode or Stop Mode. After selecting the function code number for the parameter you want to monitor, press the Function key once to show the value on the display. In functions d005 and d006, the intelligent terminals use individual segments of the display to show ON/OFF status.

If the inverter display is set to monitor a parameter and powerdown occurs, the inverter stores the present monitor function setting. For your convenience, the display automatically returns to the previously monitored parameter upon the next powerup.

"D" Function			Run Mode Edit	Units
Func. Code	**Name**	**Description**		
d001	Output frequency monitor	Real time display of output frequency to motor from 0.00 to 400.00 (Hz) If b163 is set high, output frequency (F001) can be changed by up/down key with d001 monitoring.	–	Hz
d002	Output current monitor	Filtered display of output current to motor, range is 0.00 to 9999.00	–	A
d003	Rotation direction monitor	Three different indications: "F-d" ...Forward "STOP" ...Stop "r-u" ...Reverse	–	–
d004	PID feedback value monitor	Displays the scaled PID process variable (feedback) value (A075 is scale factor), 0.00 to 999000.0	–	-
d005	Multi-function input monitor	Displays the state of the intelligent input terminals: 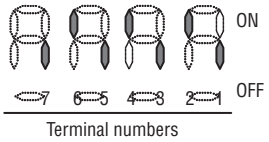 	–	–
d006	Multi-function output monitor	Displays the state of the intelligent output terminals: 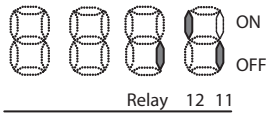 	–	–
d007	Output frequency monitor	Displays the output frequency scaled by the constant in b086. Decimal point indicates range: 0.00 to 40000.0	–	-
d008	Real frequency monitor	Displays the actual frequency, range is -400.00 to 400.00	–	Hz
d009	Torque reference monitor	Displays the torque command, range is -200. to +200.	–	%
d010	Torque bias monitor	Displays the torque bias value, range is -200. to +200.	–	%
d012	Output torque monitor	Displays the output torque, range is -200. to -+200.	–	%
d013	Output voltage monitor	Voltage of output to motor, Range is 0.0 to 600.0	–	V
d014	Input power monitor	Displays the input power, range is 0.0 to 100.0	–	KW
d015	Integrated power monitor	Displays watt-hour of the inverter, range is 0.0 to 9999000.0	–	–
d016	Total RUN time	Displays total time the inverter has been in RUN mode in hours. Range is 0 to 9999 / 1000 to 9999 / 100 to 999 (10,000 to 99,900)	–	hours

"D" Function			Run Mode Edit	Units
Func. Code	**Name**	**Description**		
d017	Power ON time monitor	Displays total time the inverter has been powered up in hours. Range is 0 to 9999 / 1000 to 9999 / 100 to 999 (10,000 to 99,900)	–	hours
d018	Fin temperature monitor	Temperature of the cooling fin, range is -20.0~150.0	–	°C
d022	Life assessment monitor	Displays the state of lifetime of electrolytic capacitors on the PWB and cooling fan. 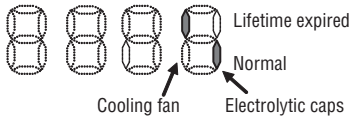	–	–
d023	Program counter	Range is 0 to 1024	–	–
d024	Program number	Range is 0 to 9999	–	–
d025	Drive Programming monitor (UM0)	Result of Drive Programming execution, range is: -2147483647~2147483647	–	–
d026	Drive Programming monitor (UM1)	Result of Drive Programming execution, range is: -2147483647~2147483647	–	–
d027	Drive Programming monitor (UM2)	Result of Drive Programming execution, range is: -2147483647~2147483647	–	–
d029	Position command monitor	-268435455~+268435455	–	–
d030	Current position monitor	-268435455~+268435455	–	–
d031	Clock	Setting Data and Time for LCD digital operator	–	–
d050	Dual monitor	Displays two different data configured in b160 and b161.	–	–
d060	Inverter mode	Displays currently selected inverter mode: IM, PM	–	–
d062	Frequency source monitor	0: Operator 1 to 15: Multi-speed freq. 1 to 15 16: Jog frequency 18: Modbus network 19: Option 21: Potentiometer 22: Pulse train 23: Calculated function output 24: EzSQ (Drive Programming) 25: [O] input 26: [OI] input 27: [O] + [OI]	–	–
d063	Run source monitor	1: Terminal 2: Operator 3: Modbus network 4: Option	–	–
d080	Fault frequency monitor	0 to 65535	–	–
d081	Fault monitor 1 (Latest)	Error code (condition of occurrence) Output frequency [Hz] Output current [A] Internal DC voltage [V] RUN time [h] ON time [h]	–	–
d082	Fault monitor 2			
d083	Fault monitor 3			
d084	Fault monitor 4			
d085	Fault monitor 5			
d086	Fault monitor 6			
d090	Warning monitor	Warning code 0 to 385	–	–
d102	DC voltage monitor	Voltage of inverter internal DC bus, Range is 0.0 to 999.9	–	V

"D" Function			Run Mode Edit	Units
Func. Code	**Name**	**Description**		
d103	Regenerative braking load rate monitor	Usage ratio of integrated brake chopper, range is 0.0~100.0	–	%
d104	Electronic thermal monitor	Accumulated value of electronic thermal detection, range is from 0.0~100.0	–	%
d130	Analog input O monitor	0 to 1023	–	–
d131	Analog input OI monitor	0 to 1023	–	–
d133	Pulse train input monitor	0.00 to 100.00	–	%
d153	PID deviation monitor	-327.68 to 327.67	–	%
d154	Insertion point PID deviation	-9999.00 to 9999.00	–	%
d155	PID output monitor	0.00 to 9999.00 if (A071: 01) -9999.00 to 9999.00 if (A071: 02)	–	%

3-3-1 Trip Event and History Monitoring

The trip event and history monitoring feature lets you cycle through related information using the keypad. See *6-2 Monitoring Trip Events, History, & Conditions* on page 273 for more details.

"D" Function			Run Mode Edit	Units
Func. Code	**Name**	**Description**		
d080	Fault frequency monitor	Number of trip events, Range is 0 to 65530	–	events
d081	Fault monitor 1 (Latest)	Displays trip event information: • Error code • Output frequency at trip point • Motor current at trip point • DC bus voltage at trip point • Cumulative inverter operation time at trip point • Cumulative power-ON time at trip point	–	–
d082	Fault monitor 2		–	–
d083	Fault monitor 3		–	–
d084	Fault monitor 4		–	–
d085	Fault monitor 5		–	–
d086	Fault monitor 6		–	–
d090	Warning monitor	Displays the warning code 0 to 385	–	–

3-3-2 Output Frequency Monitor [d001]

Displays the output frequency of the inverter. During stop, "0.00" is displayed. The monitor LED indicator "Hz" is lit while the d001 setting is displayed.

Parameter No.	Function name	Data	Default setting	Unit
d001	Output frequency monitor	0.00 to 400.00	-	Hz
b163	d001/d007 Freq. set in monitoring	00: OFF	00	-
		01: ON		
Related functions		A001, F001		

- If Frequency Reference Selection is set to Digital Operator (A001 = 02), enabling d001/d007 Freq. set in monitoring (b163 = 01) lets you change the Output Frequency Monitor (d001) setting using the Increment/Decrement keys only during operation.
- Changed Output Frequency Monitor (d001) will be reflected to the Output Frequency Setting (F001). Pressing the Enter key stores the setting in the EEPROM.
- Since F001 is rewritten while d001 is still displayed, there may be a time gap between the key operation and display change depending on the acceleration/deceleration time.
- While the PID function is activated or being stopped, the output frequency cannot be changed.
- The frequency cannot be changed in the individual input mode by pressing the Increment/Decrement keys simultaneously.

3-3-3 Output Current Monitor [d002]

Displays the output current value of the inverter. During stop, "0.0" is displayed.

The monitor LED indicator "A" is lit while the d002 setting is displayed.

Parameter No.	Function name	Data	Default setting	Unit
d002	Output current monitor	0.00 to 9999.00 The minimum unit varies depending on the capacity	-	A

3-3-4 Rotation Direction Monitor [d003]

Displays the rotation direction of the inverter.

The RUN LED indicator is lit during forward/reverse rotation.

Parameter No.	Function name	Data	Default setting	Unit
d003	Rotation direction monitor	FWD: Forward	-	-
		STOP: Stop		
		REV: Reverse		

In general, the forward direction of the motor is the counterclockwise direction as viewed from the axial direction.

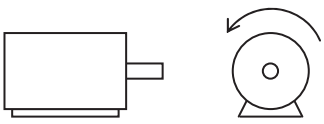

Forward

3-3-5 PID Feedback Value Monitor [d004]

When "01: Enabled" or "02: Reverse output enabled" is selected in PID Selection (A071), the PID feedback value can be monitored.

Also, conversion is possible using PID Scale (A075).

"d004 display" = "Feedback value [%]" X PID Scale (A075).

Parameter No.	Function name	Data	Default setting	Unit
d004	PID feedback value monitor	0.00 to 99.99 (Displayed in increments of 0.01.)	-	-
		100.0 to 999.9 (Displayed in increments of 0.1.)		
		1,000. to 9,999. (Displayed in increments of 1.)		
		1,000 to 9,999 (Displayed in increments of 10.)		
		Γ100 to Γ999 (Displayed in increments of 1,000.)		
A075	PID scale	0.01 to 99.99 (Displayed in increments of 0.01)	1.00	Time
Related functions		A071, A075		

3-3-6 Multi-function Input Monitor [d005]

The LED lighting position indicates the input status of the multi-function inputs.

The item that the built-in CPU recognizes to be "input" is indicated as being ON. This does not depend on the NO/NC contact setting.

Example) Multi-function inpu t terminals S7/EB, S2, S1 : ON
RP terminal, multi-function input terminals S6, S5/TH, S4/GS2, S3/GS1 : OFF

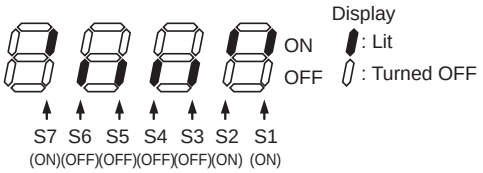

- If the input terminal response time function is used, the recognition of "input" is delayed.
- Monitoring cannot be performed even when TH (thermistor) is allocated to the multi-function input terminal S5 and a digital signal is input.

3-3-7 Multi-function Output Monitor [d006]

The LED lighting position indicates the output status of the multi-function output terminals.

The output status of the built-in CPU is indicated. This is not the status of the control circuit terminal.

This does not depend on the NO/NC contact setting.

Example) Multi-function output terminals P2, P1/EDM : ON
Relay output terminal MA : OFF

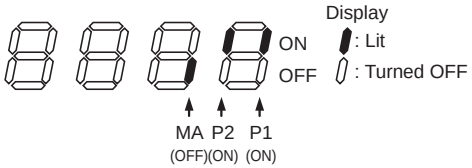

3-3-8 Output Frequency Monitor (After Conversion) [d007]

Displays a conversion value based on the coefficient set in Frequency Conversion Coefficient (b086).

This monitor is used to change the unit of displayed data (e.g. motor rpm).

"Display of the Output Frequency Monitor (d007)" = "Output Frequency Monitor (d001)" x "Frequency Conversion Coefficient (b086)"

Example) Displaying rpm of 4-pole motor:

Motor rpm N [min-1] = (120 x f [Hz])/P [pole] = f [Hz] x 30

As such, when b086 = 30.0, a motor rpm of 1800 (60 x 30.0) is displayed at 60 Hz.

Parameter No.	Function name	Data	Default setting	Unit
d007	Output frequency monitor (after conversion)	0.00 to 40000.00	-	-
b086	Frequency conversion coefficient	0.01 to 99.99 Set in increments of 0.01. (d007 = d001 x b086)	1.00	-
b163	d001/d007 Freq. set in monitoring	00: OFF	00	-
		01: ON		

- If Frequency Reference Selection is set to Digital Operator (A001 = 02), enabling d001/d007 Freq. set in monitoring (b163 = 01) lets you change the Output Frequency Monitor (d001) setting using the Increment/Decrement keys only during operation.
- Changed Output Frequency (d001) will be reflected to the Output Frequency Setting (F001). Pressing the Enter key stores the setting in the EEPROM.
- Since F001 is rewritten while d007 is still displayed, there may be a time gap between the key operation and display change depending on the acceleration/deceleration time.
- While the PID function is activated or being stopped, the output frequency cannot be changed.
- The frequency cannot be changed in the individual input mode by pressing the Increment/Decrement keys simultaneously.

3-3-9 Real Frequency Monitor [d008]

The actual-frequency monitor d008 will reflect the real motor speed always that the encoder feedback is active by parameter P003=01, independently of parameter A044 and P012 settings.

Parameter No.	Function name	Data	Default setting	Unit
d008	Real frequency monitor	-400.00 to 400.00	-	Hz
Related functions		P011, H004		

- Set Number of Encoder Pulse (P011) and Motor Pole Number (H004/H204) correctly.

3-3-10 Torque Reference Monitor [d009]

Displays the currently entered torque reference value, when torque control is selected for sensorless vector control.

Torque control becomes active when "52: ATR" is allocated to a multi-function input terminal and the ATR terminal is turned ON.

Parameter No.	Function name	Data	Default setting	Unit
d009	Torque reference monitor	-200. to +200.	-	%
Related functions		A044, C001 to C007, P033, P034		

3-3-11 Torque Bias Monitor [d010]

During sensorless vector control, the currently set torque bias amount is displayed.

Parameter No.	Function name	Data	Default setting	Unit
d010	Torque bias monitor	-200. to +200.	-	%
Related functions		A044, P036, P037, P038		

3-3-12 Output Torque Monitor [d012]

Displays an estimated value of the inverter's output torque.

Parameter No.	Function name	Data	Default setting	Unit
d012	Output torque monitor	-200. to +200.	-	%
Related functions		A044/A244		

Note The power running direction is positive and regeneration direction is negative during forward rotation, while the power running direction is negative and regeneration direction is positive during reverse rotation.

- This display is shown only when the sensorless vector control is selected. If any other control mode is selected, the correct value is not displayed.

3-3-13 Output Voltage Monitor [d013]

Displays the output voltage of the inverter.

Parameter No.	Function name	Data	Default setting	Unit
d013	Output voltage monitor	0.0 to 600.0	-	V

- Set Motor Incoming Voltage Selection (A082/A282) correctly. The correct value may not be displayed.

3-3-14 Input Power Monitor [d014]

Displays the input power (instantaneous value) of the inverter.

Parameter No.	Function name	Data	Default setting	Unit
d014	Input power monitor	0.0 to 100.0	-	kW

3-3-15 Integrated Power Monitor [d015]

Displays the integrated power (electric energy) of the inverter.

The conversion of displayed data is performed with Integrated Power Display Scale (b079).

"d015 display" = "Actual integrated power [kWh]"/"Integrated Power Display Scale (b079)"

Example) If b079 = 100 and the displayed value is 1,000, the actual integrated power is 100,000 [kWh].

The integrated power value can be cleared by setting Integrated Power Clear (b078) to "01".

The integrated power value can also be cleared via terminal input, if "53: KHC (Integrated power clear)" is allocated to any of the multi-function inputs.

When Integrated Power Display Scale (b079) is set to "1000", up to "999,000,000" [kWh] can be displayed.

This parameter is saved in the EEPROM when the power is shut off.

Parameter No.	Function name	Data	Default setting	Unit
d015	Integrated power monitor	0.0 to 9999. Displayed in increments of the setting unit 1 kW x (b079)	-	-
		1000 to 9999 Displayed in increments of the setting unit 10 kW x (b079)		
		Γ100 to Γ999 Displayed in increments of the setting unit 1,000 kW x (b079).		
b078	Integrated power clear	00: Normal	00	-
		01: Perform integrated power clear (01 is reset to 00 after the clear)		
b079	Integrated power display gain	1. to 1000.	1.	-
C001 to C007	Multi-function input 1 to 7 selection	53: KHC (integrated power clear)	-	-

3-3-16 Total RUN Time [d016]

Displays the total RUN time of the inverter.

This parameter is saved in the EEPROM when the power is shut off.

Parameter No.	Function name	Data	Default setting	Unit
d016	Total RUN time	0.0 to 9,999. Displays in increments of 1 hour.	-	h
		1,000 to 9,999 Displays in increments of 10 hours.		
		Γ100 to Γ999 (Displayed in increments of 1,000 hours.)		

Note Initialization will not clear the setting.

3-3-17 Power ON Time Monitor [d017]

Displays the total power ON time of the inverter.

This parameter is saved in the EEPROM when the power is shut off.

Parameter No.	Function name	Data	Default setting	Unit
d017	Power ON time monitor	0.0 to 9,999. Displays in increments of 1 hour.	-	h
		1,000 to 9,999 Displays in increments of 10 hours.		
		Γ100 to Γ999 (Displayed in increments of 1,000 hours.)		

Note Initialization will not clear the setting.

3-3-18 Fin Temperature Monitor [d018]

Displays the temperature of the cooling fin inside the inverter.

Parameter No.	Function name	Data	Default setting	Unit
d018	Fin temperature monitor	-20.0 to 150.0	-	ºC

3-3-19 Life Assessment Monitor [d022]

The LED lighting position indicates the status of life assessment signal.

The following two items can be monitored:

1: Main circuit board capacitor service life

2: Cooling fan life

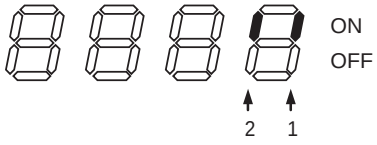

- The capacitor service life is calculated every 10 minutes. If the inverter is turned on/off frequently within this interval, the capacitor service life cannot be correctly diagnosed.
- The cooling fan life assessment function is not available for 1-phase 200V class motors of 0.4 kW max. and 3-phase 200V class motors of 0.75 kW max., beacuse these motors are not equipped with a cooling fan.

3-3-20 Position Command Monitor [d029]

Position commands can be monitored during simple position control.

Parameter No.	Function name	Data	Default setting	Unit
d029	Position command monitor	Displays the position command: -268435455 to 268435455	-	-

3-3-21 Current Position Monitor [d030]

The position feedback (d030 monitor) always is monitored when parameter P003=01 (encoder feedback), independently of parameter P012 setting. Monitor d030 is cleared even with P012=00 (simple positioning deactivated) when PCLR is set to ON. The rest of digital inputs related with positioning are not effective when P012=00.

Parameter No.	Function name	Data	Default setting	Unit
d030	Current position monitor	Displays the position command: -268435455 to 268435455	-	-

3-3-22 Dual Monitor [d050]

Desired two monitor items can be set and monitored by switching the item using the Increment/Decrement keys.

Set the parameter numbers to be monitored in b160 and b161.

Example) To monitor d001, set "001" in b160/b161.

Parameter No.	Function name	Data	Default setting	Unit
d050	Dual monitor	The two items set in b160 and b161 are monitored.	-	-
b160	1st parameter of Dual Monitor	001 to 030 Corresponding to d001 to d030.*	001	-
b161	2nd parameter of Dual Monitor		002	

* Fault Monitor parameters (d081 to d086) are excluded.

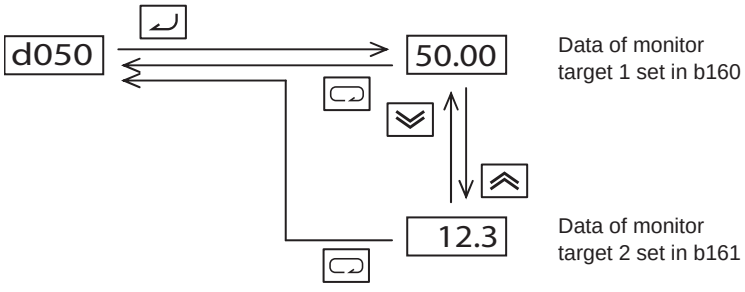

- When d001/d007 Freq. set in monitoring (b163) is set to "01: Enabled", the output frequencies in d001 and d007 can be changed using the Increment/Decrement keys during operation. It cannot be changed if d001 and d007 are monitored using d050.

3-3-23 Inverter Mode [d060]

Displays the current inverter mode.

The inverter mode is changed using b171.

Parameter No.	Function name	Data	Default setting	Unit
d060	Inverter mode	I-C IM (induction motor) heavy load mode	-	-
		I-V IM (induction motor) light load mode		
		PM Permanent magnet motor control		

3-3-24 Frequency Source Monitor [d062]

It displays the frequency source considering the A001/A201 (1st/2nd motor setting).

Parameter No.	Function name	Data	Default setting	Unit
d062	Frequency source monitor	0: Operator	-	-
		1 to 15: Multi-speed freq. 1 to 15		
		16: Jog frequency		
		18: Modbus network		
		19: Option		
		21: Potentiometer		
		22: Pulse train		
		23: Calculated function output		
		24: EzSQ (Drive Programming)		
		25: [O] input		
		26: [OI] input		
		27: [O] + [OI]		

3-3-25 Run Command Source Monitor [d063]

It displays the RUN command source considering the A002/A202 (1st/2nd motor setting).

Parameter No.	Function name	Data	Default setting	Unit
d063	Run source monitor	1: Terminal	-	-
		2: Operator		
		3: Modbus Network		
		4: Option		

3-3-26 Fault Frequency Monitor [d080]

Displays the number of times the inverter has tripped.

This number is saved in the EEPROM when the power is turned off.

Parameter No.	Function name	Data	Default setting	Unit
d080	Fault frequency monitor	0. to 9999.	-	Time
		1,000 to 6,553 (Displayed in increments of 10.)		

3-3-27 Fault Monitors 1 to 6 [d081 to d086]

Displays the records of the last 6 errors. Error records are saved in the EEPROM when the power is turned off.

The record of the latest error is displayed under Fault Monitor 1 (d081).

(Display)

(1) Cause of trip (One of E01 to E83 is displayed.)

(2) Output frequency [Hz] at the time of tripping.

(3) Output current [A] at the time of tripping. If the inverter is currently stopped (E**.1), the monitor value may become zero.

(4) P-N DC voltage [V] in the main circuit at the time of tripping. If tripping occurs due to ground fault at power-on, the monitor value may become zero.

(5) Total inverter RUN time [h] before the trip.

(6) Total inverter power ON time [h] before the trip.

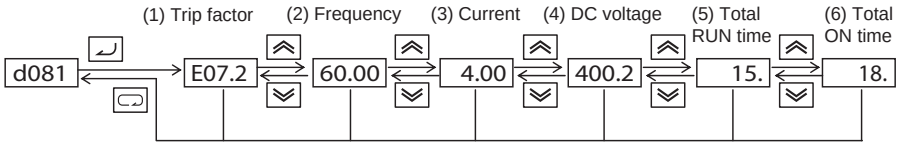

_ _ _ _ is shown if no trip has occurred.

3-3-28 Warning Monitor [d090]

If the set data is inconsistent with other data, a warning is displayed.

While a warning is present, the Program LED (PRG) indicator remains lit until the data is corrected.

3-3-29 DC Voltage Monitor [d102]

The inverter P-N DC voltage (DC voltage between the inverter terminals P/+2 and N/-) is displayed.

During operation, the monitor value changes depending on the actual DC voltage of the inverter.

Parameter No.	Function name	Data	Default setting	Unit
d102	DC voltage monitor	0.0 to 999.9	-	V

3-3-30 Regenerative Braking Load Rate Monitor [d103]

Displays a regenerative braking load rate. When the displayed value exceeds the value set in the Usage Rate of Regenerative Braking (b090), the inverter trips beacuse of "E06 (Braking resistor overload protection)".

Parameter No.	Function name	Data	Default setting	Unit
d103	Regenerative braking load rate monitor	0.0 to 100.0	-	%
Related functions		b090		

3-3-31 Electronic Thermal Monitor [d104]

Displays an electronic thermal load rate. When the displayed value exceeds 100%, the inverter trips because of "E05 (Overload protection)".

When the power is shut off, the displayed value changes to 0. Also when totaling does not occur for 10 minutes, the displayed value changes to 0.

Parameter No.	Function name	Data	Default setting	Unit
d104	Electronic thermal monitor	0.0 to 100.0	-	%

3-3-32 Analog Input O/OI Monitors [d130/d131]

Displays the analog input O/OI value. The data range is from 0 to 1023 and it can be read from Modbus and Drive Programming.

Parameter No.	Function name	Data	Default setting	Unit
d130	Analog input O monitor	0 to 1023	-	-
d131	Analog input OI monitor			

3-3-33 Pulse Train Input Monitor [d133]

The pulse train input monitor (terminal EA) is always valid, independently of any parameter setting. This monitor shows the value after full scale conversion and filter processing but before bias addition.

Parameter No.	Function name	Data	Default setting	Unit
d133	Pulse train input monitor	0.00 to 100.00	-	%

3-3-34 PID Deviation Monitor [d153]

It displays the PID deviation into d153 monitor. It only operates when PID function is effective (A071=01 or 02).

Parameter No.	Function name	Data	Default setting	Unit
d153	PID deviation monitor	-9999.00 to 9999.00	-	%
A071	PID selection	00: OFF (Disabled)	00	-
		01: ON(+) (Enabled)		
		02: ON(+/-) (Reverse output enabled)		
A075	PID scale	0.01 to 99.99	1.00	-

d153 = PID deviation x PID scale (A075).

The display by digital operator is shown below:

Display	Data
-999 to -100	-9999.00 to -1000.00
-999. to -100.	-999.99 to -100.00
-99.9 to -10.0	-99.99 to -10.00
-9.99 to 99.99	-9.99 to 99.99
100.0 to 999.9	100.00 to 999.99
1000. to 9999.	1000.00 to 9999.00

3-3-35 PID Output Monitor [d155]

It displays the scaled PID output into d155 monitor. It is enabled only when PID function is effective (A071=01 or 02).

Parameter No.	Function name	Data	Default setting	Unit
d155	PID output monitor	0.00 to 9999.00 (A071=01) -9999.00 to 9999.00 (A071=02)	-	%
A071	PID selection	00: OFF (Disabled)	00	-
		01: ON(+) (Enabled)		
		02: ON(+/-) (Reverse output enabled)		
A075	PID scale	0.01 to 99.99	1.00	-

d155 = PID output value x PID scale (A075).

Note: PID output value is a value limited by frequency limit (A061/A261) and PID output limit (A078). Monitor d155 displays a value after a limit was set.

The display by digital operator is shown below:

Display	Data
-999 to -100	-9999.00 to -1000.00
-999. to -100.	-999.99 to -100.00
-99.9 to -10.0	-99.99 to -10.00
-9.99 to 99.99	-9.99 to 99.99
100.0 to 999.9	100.00 to 999.99
1000. to 9999.	1000.00 to 9999.00

3-3-36 Local Monitoring with Keypad Connected

The MX2 inverter's serial port may be connected to an external digital operator. During those times, the inverter keypad keys will not function (except for the Stop key). However, the inverter's 4-digit display still provides the Monitor Mode function, displaying any of the parameters d001 to d060. Function b150, Monitor Display Select for Networked Inverter, determines the particular d00x parameter displayed. Refer to the previous table.

When monitoring the inverter with external keypad connected, please note the following:

- The inverter display will monitor d00x functions according to b150 setting when a device is already connected to the inverter's serial port at inverter powerup.
- When external keypad is connected, the inverter keypad will also display error codes for inverter trip events. Use the Stop key or inverter Reset function to clear the error. Refer to *6-2-2 Error Codes* on page 273 to interpret the error codes.
- The Stop key can be disabled, if you prefer, by using function b087.

3-4 "F" Group: Main Profile Parameters

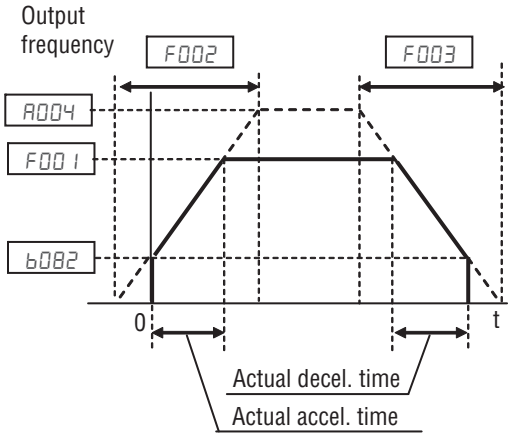

The basic frequency (speed) profile is defined by parameters contained in the "F" Group as shown to the right. The set running frequency is in Hz, but acceleration and deceleration are specified in the time duration of the ramp (from zero to maximum frequency, or from maximum frequency to zero). The motor direction parameter determines whether the keypad Run key produces a FWD or REV command. This parameter does not affect the intelligent terminal [FW] and [REV] functions, which you configure separately.

Acceleration 1 and Deceleration 1 are the standard default accel and decel values for the main profile. Accel and decel values for an alternative profile are specified by using parameters Ax92 through Ax93. The operator rotation direction selection (F004) determines the direction of rotation as commanded only from the keypad. This setting applies to any motor profile (1st or 2nd) in use at t particular time.

"F" Function			Run Mode Edit	Defaults	
Func. Code	**Name**	**Description**		**EU**	**Units**
F001	Output frequency setting/monitor	Standard default target frequency that determines constant motor speed, range is 0.0 / start frequency to maximum frequency (A004)	✓	0.00	Hz
F002	Acceleration time 1	0.00 to 3600.00	✓	10.00	sec.
F202	2nd acceleration time 1		✓	10.00	sec.
F003	Deceleration time 1		✓	10.00	sec.
F203	2nd deceleration time 1		✓	10.00	sec.
F004	Operator rotation direction selection	Two options; select codes: 00 ...Forward 01 ...Reverse	×	00	–

The lower limit of the acceleration/deceleration time (F002/F003) has been changed to 0.00s. With this setting the inverter will operate automatically like if the LAC digital input was trigger from a digital input. This means that reference speed is directly applied to the output without any ramp as soon as the FW/RV commands are activated. In the same way 0 Hz will be applied directly on the output when the FW/RV command is turned off.

Acceleration and deceleration can be set via Drive Programming as well via the following parameter.

"P" Function			Run Mode Edit	Defaults	
Func. Code	**Name**	**Description**		**EU**	**Units**
P031	Acceleration/Deceleration time input type	Two options; select codes: 00 ...Via Digital Operator 03 ...Via Drive Programming	×	00	–

3-5 "A" Group: Standard Functions

The inverter provides flexibility in how you control Run/Stop operation and set the output frequency (motor speed). It has other control sources that can override the A001/A002 settings. Parameter A001 sets the source selection for the inverter's output frequency. Parameter A002 selects the Run command source (for FW or RV Run commands). The default settings use the input terminals for Europe (EU).

"A" Function			Run Mode Edit	Defaults	
Func. Code	Name	Description		EU	Units
A001	Frequency reference selection	Eight options; select codes: 00 ...VR (Digital Operator) 01 ...Terminal 02 ...Operator (F001) 03 ...ModBus (RS485) 04 ...Option 06 ...Pulse train frequency 07 ...EzSQ (Drive Programming) 10 ...Math (Operator function result)	×	01	–
A201	Frequency reference selection, 2nd motor		×	01	–
A002	Run command selection	Five options; select codes: 01 ..Terminal 02 ...Operator (F001) 03 ...ModBus (RS485) 04 ...Option	×	01	–
A202	Run command selection, 2nd motor		×	01	–

Frequency Source Setting - For parameter A001, the following table provides a further description of each option, and a reference to other page(s) for more information.

Code	Frequency Source	Refer to page(s)…
00	POT on ext. operator - The range of rotation of the knob matches the range defined by b082 (start frequency) to A004 (max. frequency), when external operator is used	-
01	Control terminal - The active analog input signal on analog terminals [O] or [OI] sets the output frequency	93, 240, 248, 250
02	Function F001 setting - The value in F001 is a constant, used for the output frequency	89
03	ModBus network input - The network has a dedicated register for inverter output frequency	318
04	Option - Select when an option card is connected and use the frequency source from the option	(manual of each option)
06	Pulse train input - The pulse train given to EA terminal. The pulse train must be 24 VDC and 32 kHz max.	179, 251
07	Via Drive Programming - The frequency source can be given by the Drive Programming function, when it is used	(Drive Programming manual)
10	Calculate function output - The Calculated function has user-selectable analog input sources (A and B). The output can be the sum, difference, or product (+, -, x) of the two outputs.	118

Run Command Source Setting - For parameter A002, the following table provides a further description of each option, and a reference to other page(s) for more information.

Code	Run Command Source	Refer to page(s)…
01	Control terminal - The [FW] or [RV] input terminals control Run/Stop operation	205
02	Keypad Run key - The Run and Stop keys provide control	70
03	ModBus network input - The network has a dedicated coil for Run/Stop command and a coil for FW/RV	318
04	Option - Select when an option card is connected and use the frequency source from the option	(manual of each option)

A001/A002 **Override Sources** - The inverter allows some sources to override the setting for output frequency and Run command in A001 and A002. This provides flexibility for applications that occasionally need to use a different source, leaving the standard settings in A001/A002.

The inverter has other control sources that can temporarily override the parameter A001 setting, forcing a different output frequency source. The following table lists all frequency source setting methods and their relative priority ("1" is the highest priority).

Priority	A001 Frequency Source Setting Method	Refer to page…
1	[CF1] to [CF4] Multi-speed terminals	96
2	[OPE] Operator Control intelligent input	214
3	[F-TM] intelligent input	218
4	[AT] terminal	250
5	A001 Frequency source setting	90

The inverter also has other control sources that can temporarily override the parameter A002 setting, forcing a different Run command source. The following table lists all Run command setting methods and their relative priority ("1" is the highest priority).

Priority	A002 Run Command Setting Method	Refer to page…
1	[OPE] Operator Control intelligent input	214
2	[F-TM] intelligent input	218
3	A002 Run command source setting	90

The figure below shows the correlation diagram of all frequency source setting methods and their relative priority.

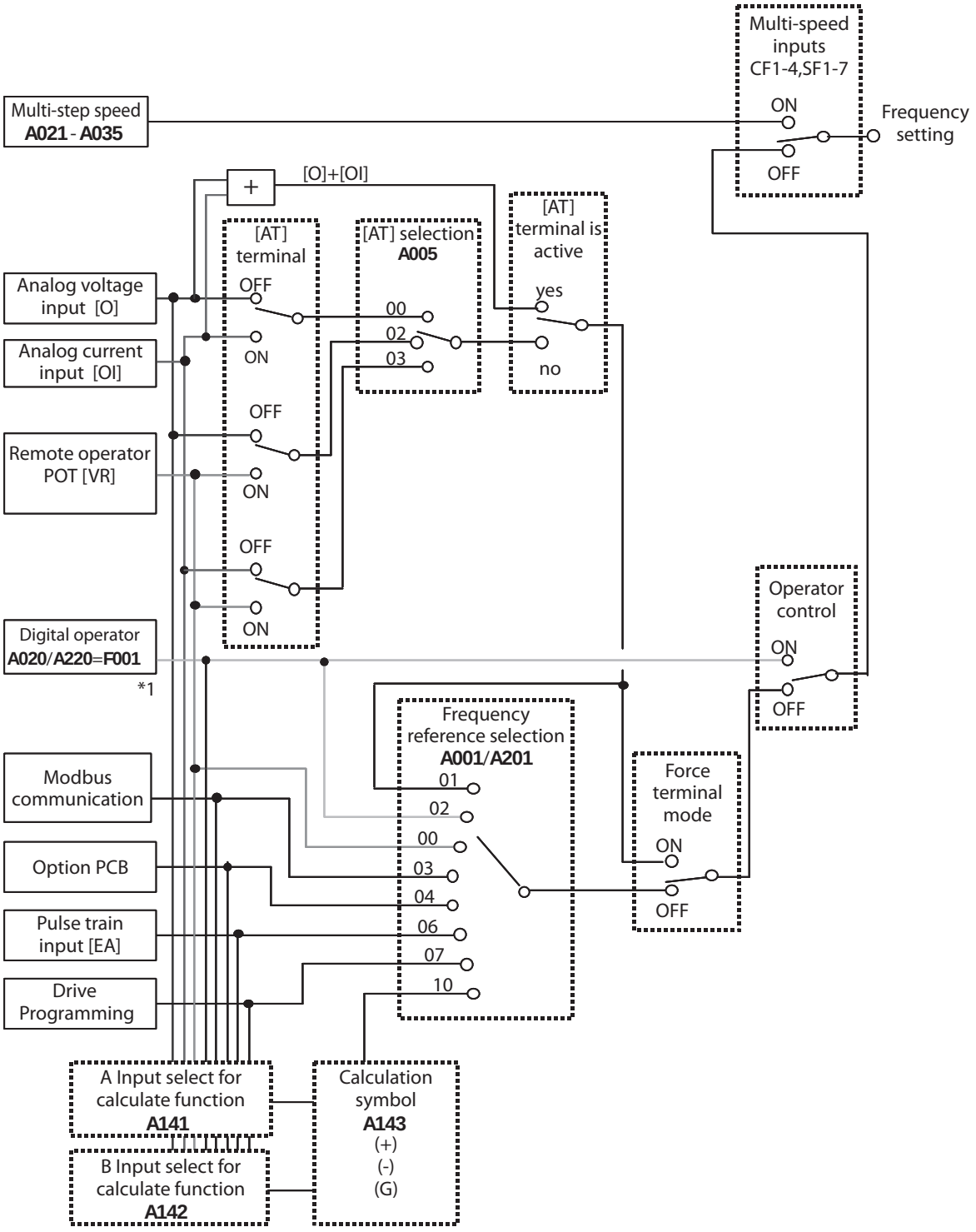

Frequency calculate function

Note 1: You can set the inverter output frequency with function **F001** only when you have specified "02" for the frequency source setting **A001**. If the setting of function **A001** is other than "02", function **F001** operates as the frequency command monitoring function. And by setting the frequency set in monitoring active (**b163=01**), you can change the inverter output frequency with function **d001** or **d007**.

3-5-1 Basic Parameter Settings

These settings affect the most fundamental behavior of the inverter - the outputs to the motor. The frequency of the inverter's AC output determines the motor speed. You may select from three different sources for the reference speed. During application development you may prefer using the potentiometer, but you may switch to an external source (control terminal setting) in the finished application, for example.

The base frequency and maximum frequency settings interact according to the graph below (left). The inverter output operation follows the constant V/f curve until it reaches the full-scale output voltage at the base frequency. This initial straight line is the constant-torque part of the operating characteristic. The horizontal line over to the maximum frequency serves to let the motor run faster, but at a reduced torque. This is the constant-power operating range. If you want the motor to output constant torque over its entire operating range (limited to the motor nameplate voltage and frequency rating), then set the base frequency and maximum frequency equal as shown (below right).

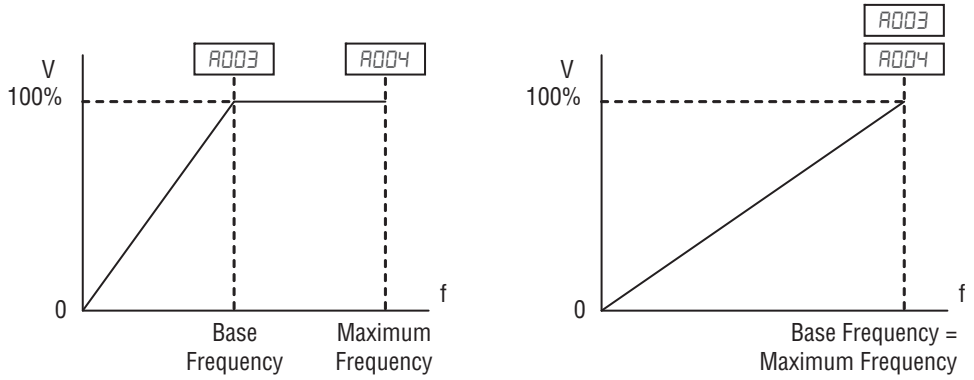

Note The "2nd motor" settings in the table in this chapter store an alternate set of parameters for a second motor. The inverter can use the 1st set or 2nd set of parameters to generate the output frequency to the motor. See "Configuring the Inverter for Multiple Motors" on page 172.

"A" Function			Run Mode Edit	Defaults	
Func. Code	Name	Description		EU	Units
A003	Base frequency	Settable from 30 Hz to the maximum frequency (A004)	×	50.0	Hz
A203	2nd set base frequency	Settable from 30 Hz to the 2nd maximum frequency (A204)	×	50.0	Hz
A004	Maximum frequency	Settable from the base frequency to 400 Hz	×	50.0	Hz
A204	2nd maximum frequency	Settable from the 2nd base frequency to 400 Hz	×	50.0	Hz

3-5-2 Analog Input Settings

The inverter has the capability to accept an external analog input that can command the output frequency to the motor. Voltage input (0-10 V) and current input (4-20 mA) are available on separate terminals ([O] and [OI] respectively). Terminal [L] serves as signal ground for the two analog inputs. The analog input settings adjust the curve characteristics between the analog input and the frequency output.

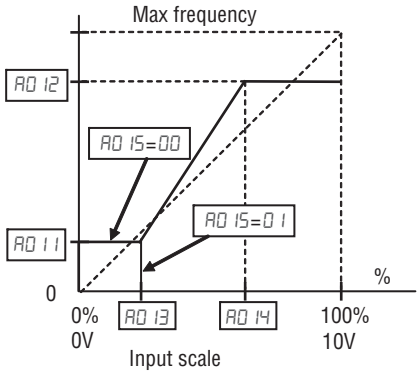

Adjusting [O-L] characteristics - In the graph to the right, A013 and A014 select the active portion of the input voltage range. Parameters A011 and A012 select the start and end frequency of the converted output frequency range, respectively. Together, these four parameters define the major line segment as shown. When the line does not begin at the origin (A011 and A013 > 0), then A015 defines whether the inverter outputs 0 Hz or the A011-specified frequency when the analog input value is less than the A013 setting. When the input voltage is greater than the A014 ending value, the inverter outputs the ending frequency specified by A012.

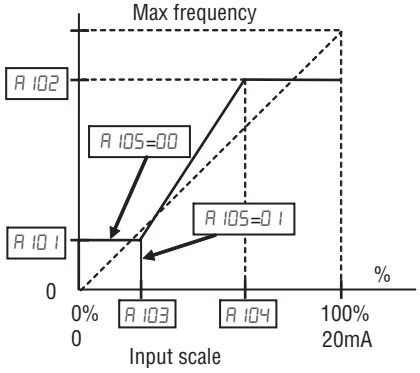

Adjusting [OI-L] characteristics - In the graph to the right, A103 and A104 select the active portion of the input current range. Parameters A101 and A102 select the start and end frequency of the converted output frequency range, respectively. Together, these four parameters define the major line segment as shown. When the line does not begin at the origin (A101 and A103 > 0), then A105 defines whether the inverter outputs 0 Hz or the A101-specified frequency when the analog input value is less than the A103 setting. When the input voltage is greater than the A104 ending value, the inverter outputs the ending frequency specified by A102.

Adjusting [VR-L] characteristics - This is used when an optional operator is used. Refer to parameters A161 ~ A165 for the details.

"A" Function			Run Mode Edit	Defaults	
Func. Code	**Name**	**Description**		**EU**	**Units**
A005	O/OI selection	Three options; select codes: 00... [O]/[OI] Switches between O/OI via terminal AT 02... [O]/VR Switches between O/FREQ adjuster via terminal AT 03... [OI]/VR Switches between OI/FREQ adjuster via terminal AT (Enabled only when 3G3AX-OP01 is used)	×	00	–
A011	O start frequency	The output frequency corresponding to the analog input range starting point, range is 0.00 to 400.0	×	0.00	Hz
A012	O end frequency	The output frequency corresponding to the analog input range ending point, range is 0.0 to 400.0	×	0.00	Hz
A013	O start ratio	The starting point (offset) for the active analog input range, range is 0 to 100	×	0	%
A014	O end ratio	The ending point (offset) for the active analog input range, range is 0 to 100	×	100	%

"A" Function			Run Mode Edit	Defaults	
Func. Code	**Name**	**Description**		**EU**	**Units**
A015	O start selection	Two options; select codes: 00... Start FQ 01... 0 Hz	×	01	–
A016	O, O2, OI sampling	Range n = 1 to 31, 1 to 30 : ×2ms filter 31: 500ms fixed filter with ±0.1kHz hys.	×	8	Spl.

The [AT] terminal selects whether the inverter uses the voltage [O] or current [OI] input terminals for external frequency control. When intelligent input [AT] is ON, you can set the output frequency by applying a current input signal at [OI]-[L]. When the [AT] input is OFF, you can apply a voltage input signal at [O]-[L] to set the output frequency. Note that you must also set parameter A001 = 01 to enable the analog terminal set for controlling the inverter frequency.

Option Code	Terminal Symbol	Function Name	State	Description
16	AT	Analog Input Voltage/ Current Select	ON	See the table down below
			OFF	
Valid for inputs:		C001~C007		Example :
Required settings:		A001 = 01		

Notes:

Combination of A005 setting and [AT] input for analog input activation.

A005	[AT] Input	Analog Input Configuration
00	ON	[OI]
	OFF	[O]
02	ON	Keypad Pot
	OFF	[O]
03	ON	Keypad Pot
	OFF	[OI]

- Be sure to set the frequency source setting A001=01 to select the analog input terminals.

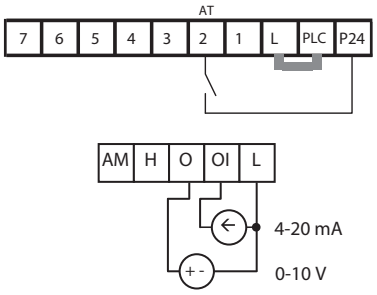

See I/O specs on page 195.

If [AT] is not assigned to any of the intelligent input terminal, inverter recognizes the input [O]+[OI].

A016: **External Frequency Filter Time Constant** - This filter smoothes the analog input signal for the inverter's output frequency reference.

- A016 sets the filter range from n=1 to 30. This is a simple moving average calculation, where n (number of samples) is variable.
- A016=31 is a special value. It configures the inverter to use a movable deadband feature. Initially the inverter uses the 500 ms of filter time constant. Then, the deadband is employed for each subsequent average of 16 samples. The deadband works by ignoring small fluctuations in each new average: less than ±0.1 Hz change. When a 30-sample average exceeds this deadband, then the inverter applies that average to the output frequency reference, and it also becomes the new deadband comparison point for subsequent sample averages.

The example graph below shoes a typical analog input waveform. The filter removes the noise spikes. When a speed change (such as level increase)

occurs, the filter naturally has a delayed response. Due to the deadband feature (A016=31), the final output changes only when the 30-sample average moves past the deadband threshold.

⚠Tip The deadband feature is useful in applications that requires a very stable output frequency but use an analog input for the speed reference. Example application: A grinding machine uses a remote potmeter for operator speed input. After a setting change, the grinder maintains a very stable speed to deliver a uniform finished surface.

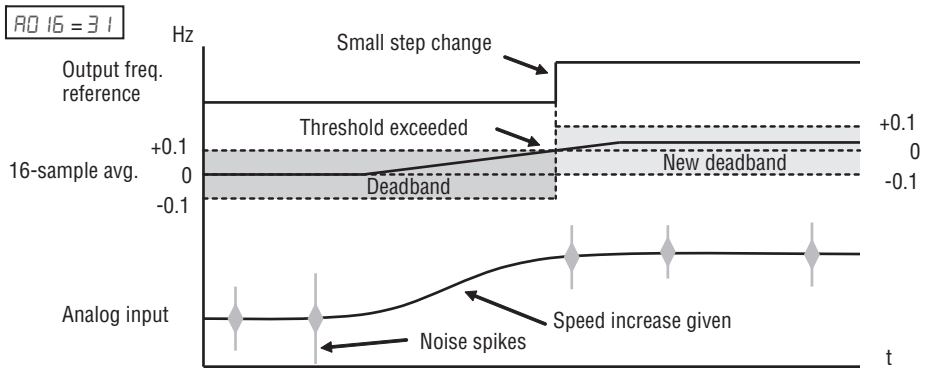

3-5-3 Multi-speed and Jog Frequency Setting

Multi-speed - The MX2 inverter has the capability to store and output up to 16 preset frequencies to the motor (A020 to A035). As in traditional motion terminology, we call this *multi-speed profile* capability. These preset frequencies are selected by means of digital inputs to the inverter. The inverter applies the current acceleration or deceleration setting to change from the current output frequency to the new one. The first multi-speed setting is duplicated for the second motor settings (the remaining 15 multi-speeds apply only to the first motor).

"A" Function			Run Mode Edit	Defaults	
Func. Code	**Name**	**Description**		**EU**	**Units**
A019	Multi-step speed selection	Select codes: 00... Binary operation (16 speeds selectable with 4 terminals) 01... Bit operation (8 speeds selectable with 7 terminals)	×	00	-
A020	Multi-step speed reference 0	Defines the first speed of a multi-speed profile, range is 0.00 / start frequency to 400Hz A020 = Speed 0 (1st motor)	✓	6.00	Hz
A220	2nd multi-step speed reference 0	Defines the first speed of a multi-speed profile or a 2nd motor, range is 0.00 / start frequency to 400Hz A220 = Speed 0 (2nd motor)	✓	6.00	Hz
A021 to A035	Multi-step speed reference 1 to 15	Defines 15 more speeds, range is 0.00 / start frequency to 400 Hz. A021=Speed 1 ~ A035=Speed15	✓	0.00	Hz
		A021 ~ A035		0.00	
C169	Multi-step speed/position determination time	Masks the transition time when changing the combination of inputs. Range is 0 to 200 (x10 ms)	×	0	

There are two ways for speed selection, that are "binary operation" and "bit operation".

For binary operation (A019=00), you can select 16 speeds by combination of 4 digital inputs. And for bit operation (A019=01), you can select 8 speeds by using 7 digital inputs. Please refer to the following figures for detailed explanation.

Binary operation ("1"=ON)

Speed	Param.	CF4	CF3	CF2	CF1
Speed 0	A020	0	0	0	0
Speed 1	A021	0	0	0	1
Speed 2	A022	0	0	1	0
Speed 3	A023	0	0	1	1
Speed 4	A024	0	1	0	0
Speed 5	A025	0	1	0	1
Speed 6	A026	0	1	1	0
Speed 7	A027	0	1	1	1
Speed 8	A028	1	0	0	0
Speed 9	A029	1	0	0	1
Speed 10	A030	1	0	1	0
Speed 11	A031	1	0	1	1
Speed 12	A032	1	1	0	0
Speed 13	A033	1	1	0	1
Speed 14	A034	1	1	1	0
Speed 15	A035	1	1	1	1

Note When choosing a subset of speeds to use, always start at the top of the table, and with the least-significant bit: CF1, CF2, etc

The example with eight speeds in the figure below shows how input switches configured for CF1-CF3 functions can change the motor speed in real time.

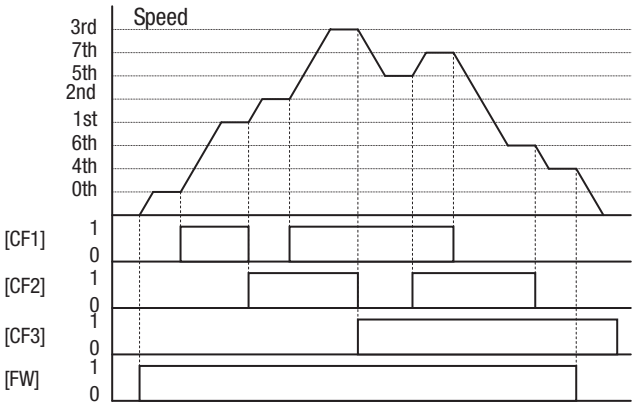

Note Speed 0 depends on A001 parameter value.

Bit operation ("1"=ON, "X"=regardless the condition (ON or OFF))

Speed	Param.	SF7	SF6	SF5	SF4	SF3	SF2	SF1
Speed 0	A020	0	0	0	0	0	0	0
Speed 1	A021	X	X	X	X	X	X	1
Speed 2	A022	X	X	X	X	X	1	0
Speed 3	A023	X	X	X	X	1	0	0
Speed 4	A024	X	X	X	1	0	0	0
Speed 5	A025	X	X	1	0	0	0	0
Speed 6	A026	X	1	0	0	0	0	0
Speed 7	A027	1	0	0	0	0	0	0

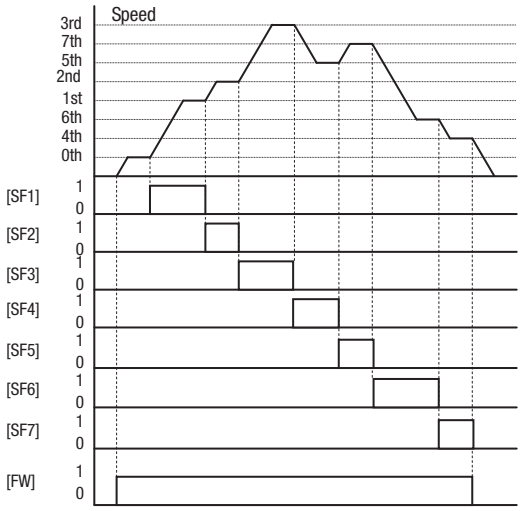

The example with eight speeds in the figure below shows how input switches configured for SF1-SF7 functions can change the motor speed in real time.

NOTE: Speed 0 depends on A001 parameter value.

Digital Input configuration for binary operation

Option Code	Terminal Symbol	Function Name	State	Description
02	CF1	Multi-speed Select, Bit 0 (LSB)	ON	Bin encoded speed select, Bit 0, logical 1
			OFF	Bin encoded speed select, Bit 0, logical 0
03	CF2	Multi-speed Select, Bit 1	ON	Bin encoded speed select, Bit 1, logical 1
			OFF	Bin encoded speed select, Bit 1, logical 0
04	CF3	Multi-speed Select, Bit 2	ON	Bin encoded speed select, Bit 2, logical 1
			OFF	Bin encoded speed select, Bit 2, logical 0
05	CF4	Multi-speed Select, Bit 3 (MSB)	ON	Bin encoded speed select, Bit 3, logical 1
			OFF	Bin encoded speed select, Bit 3, logical 0
Valid for inputs:		C001~C007		Example (some CF inputs require input configuration; some are default inputs): 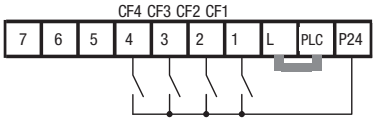 See I/O specs on page 9 and page 195.
Required settings:		F001, A001=02, A020 to A035		
• When programming the multi-speed settings, be sure to press the ↵ key each time and then set the next multi-speed setting. Note that when the key is not pressed, no data will be set. • When a multi-speed setting more than 50 Hz (60 Hz) is to be set, it is necessary to program the maximum frequency A004 high enough to allow that speed				

While using the multi-speed capability, you can monitor the present frequency with monitor function d001 during each segment of a multi-speed operation.

Note When using the Multi-speed Select settings CF1 to CF4, do not display parameter F001 or change the value of F001 while the inverter is in Run Mode (motor running). If it is necessary to check the value of F001 during Run Mode, please monitor d001 instead of F001.

There are two ways to program the speeds into the registers A020 to A035:

1. Standard keypad programming
2. Programming using the CF switches. Set the speed following these steps:
   a) Turn the Run command OFF (Stop Mode).
   b) Turn inputs ON to select desired Multi-speed. Display the value of F001 on the digital operator.

c) Set the desired output frequency by pressing the ⋀ and ⋁ keys.

d) Press the ↵ key once to store the set frequency. When this occurs, F001 indicates the output frequency of Multi-speed n.

e) Press the ↵ key once to confirm that the indication is the same as the set frequency.

f) Repeat operations in 2. a) to 2. e) to set the frequency of other Multi-speeds.

Digital Input configuration for bit operation

Option Code	Terminal Symbol	Function Name	State	Description
32~38	SF1~SF2	Multistage Speed ~ Bit Operation	ON	Makes multistage speed by combination of the inputs.
			OFF	
Valid for inputs:		C001~C007		
Required settings:		F001, A001=02, A020 to A035		

Notes:

- When programming the multi-speed settings, be sure to press the ↵ key each time and then set the next multi-speed setting. Note that when the key is not pressed, no data will be set.
- When a multi-speed setting more than 50Hz (60 Hz) is to be set, it is necessary to program the maximum frequency A004 high enough to allow that speed

Jog Frequency - The jog speed setting is used whenever the Jog command is active. The jog speed setting range is arbitrarily limited to 9.99 Hz, to provide safety during manual operation. The acceleration to the jog frequency is

instantaneous, but you can choose from six modes for the best method for stopping the jog operation.

"A" Function			Run Mode Edit	Defaults	
Func. Code	Name	Description		EU	Units
A038	Jogging frequency	Defines limited speed for jog, range is from start frequency to 9.99 Hz	✓	6.00	Hz
A039	Jogging stop selection	Define how end of jog stops the motor; six options: 00... FRS (Free running on jogging stop/Disabled in operation) 01... DEC (Deceleration stop on jogging stop/Disabled in operation) 02... DB (DC injection braking on jogging stop/Disabled in operation) 03... FRS (RUN) (Free running on jogging stop/Disabled in operation) 04... DEC (RUN) (Deceleration stop on jogging stop/Enabled in operation) 05... DB (RUN) (DC injection braking on jogging stop/ Enabled in operation)	×	04	

With options 0,1 and 2 on parameter A039 the JOG command is not accepted if the inverter is already running, so is necessary to activate the JG terminal before the FW or REV commands.

For jogging operation, turn JG terminal ON at first and then turn FW or RV terminal on.

When jogging stop mode A039=02 or 05, DC braking data is needed.

During jogging operation, frequency can be set with output frequency setting F001.

Jogging does not use an acceleration ramp, so we recommend setting the jogging frequency A038 to 5 Hz or less to prevent tripping

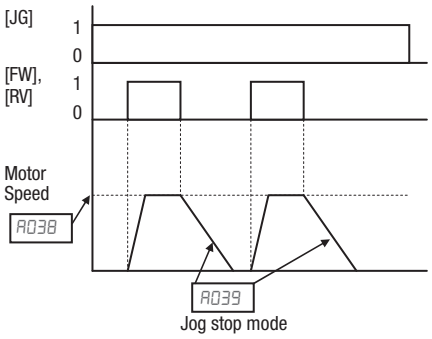

To enable the Run key on the digital operator for jog input, set the value 01 (terminal mode) in A002 (Run command source).

Option Code	Terminal Symbol	Function Name	State	Description
06	JG	Jogging	ON	Inverter is in Run Mode, output to motor runs at jog parameter frequency
			OFF	Inverter is in Stop Mode

Option Code	Terminal Symbol	Function Name	State	Description
Valid for inputs:		C001~C007		Example (requires input configuration – see page 153): 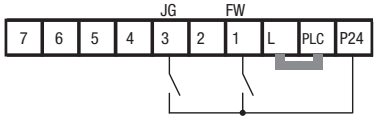 See I/O specs on page 195.
Required settings:		A002=01, A038>b082, A038>0, A039		
Notes: • No jogging operation is performed when the set value of jogging frequency A038 is smaller than the start frequency b082, or the value is 0 Hz. • Be sure to stop the motor when switching the function [JG] ON or OFF.				

3-5-4 Torque Control Algorithms

Inverter Torque Control Algorithms

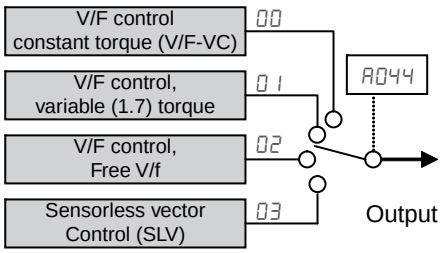

The inverter generates the motor output according to the V/f algorithm selected. Parameter A044 selects the inverter algorithm for generating the frequency output, as shown in the diagram to the right (A244 for 2nd motor). The factory default is 00 (constant torque).

Review the following description to help you choose the best torque control algorithm for your application.

The built-in V/f curves are oriented toward developing constant torque or variable torque characteristics (see graphs below). You can select either constant torque or reduced torque V/f control.

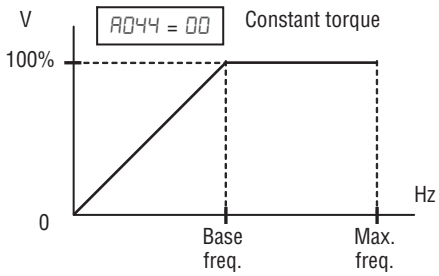

Constant and Variable (Reduced) Torque - The graph at right shows the constant torque characteristic from 0 Hz to the base frequency A003. The voltage remains constant for output frequencies higher than the base frequency.

The graph above (right) shows the variable (reduced) torque curve, which has a constant torque characteristic from 0 Hz to 10% of the base frequency. This helps to achieve higher torque at low speed with reduced torque curve at higher speeds.

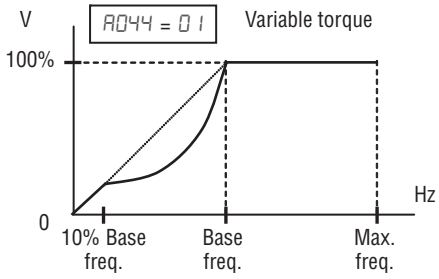

Sensorless Vector Control - You can achieve high torque performance (200% torque at 0.5 Hz of output frequency) without motor speed feedback (encoder feedback), which is so-called sensorless vector control (SLV control).

Free V/F Control - The free V/F setting function allows you to set an arbitrary V/F characteristics by specifying the voltages and frequencies (b100~b113) for the seven points on the V/F characteristic curve.

The free V/F frequencies 1 to 7 set by this function must always be in the collating sequence of "1<2<3<4<5<6<7".

Since all the free V/F frequencies are set to 0 Hz as default (factory setting), specify their arbitrary values (being set with free-setting V/F frequency 7). The inverter does not operate the free V/F characteristics with the factory setting.

Enabling the free V/F characteristics setting function disables the torque boost selection (A041/A241), base frequency setting (A003/A203), and maximum fre-

quency setting (A004/A204) automatically. (The inverter regard the value of free-setting V/F frequency 7 (b112) as the maximum frequency.)

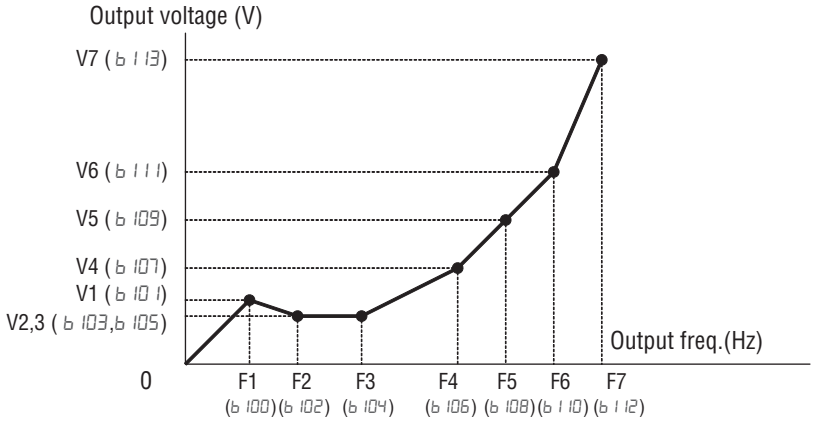

Item	Code	Set range	Remarks
Free V/f frequency 7	b112	0 to 400 (Hz)	Setting of the output freq. at each breakpoint of the V/F characteristic curve
Free V/f frequency 6	b110	Free-setting V/F freq.5 to freq.7 (Hz)	
Free V/f frequency 5	b108	Free-setting V/F freq.4 to freq.6 (Hz)	
Free V/f frequency 4	b106	Free-setting V/F freq.3 to freq.5 (Hz)	
Free V/f frequency 3	b104	Free-setting V/F freq.2 to freq.4 (Hz)	
Free V/f frequency 2	b102	Free-setting V/F freq.1 to freq.3 (Hz)	
Free V/f frequency 1	b100	0 to Free-setting V/F freq.2 (Hz)	
Free V/f voltage 7	b113	0.0 to 800.0 (V)	Setting of the output voltage at each breakpoint of the V/F characteristic curve*1
Free V/f voltage 6	b111		
Free V/f voltage 5	b109		
Free V/f voltage 4	b107		
Free V/f voltage 3	b105		
Free V/f voltage 2	b103		
Free V/f voltage 1	b101		

*1 Even if the voltage higher than input is set as a free-setting V/F voltage 1 to 7, the inverter output voltage cannot exceed the inverter input voltage or that specified by the AVR voltage selection. Carefully note that selecting an inappropriate control system (V/F characteristics) may result in overcurrent during motor acceleration or deceleration or vibration of the motor or other machine driven by the inverter.

Manual Torque Boost - The Constant and Variable Torque algorithms feature an adjustable *torque boost* curve. When the motor load has a lot of inertia or starting friction, you may need to increase the low frequency starting torque characteristics by boosting the voltage above the normal V/f ratio (shown at right). The function attempts to compensate for voltage drop in the motor primary winding in the low speed range.

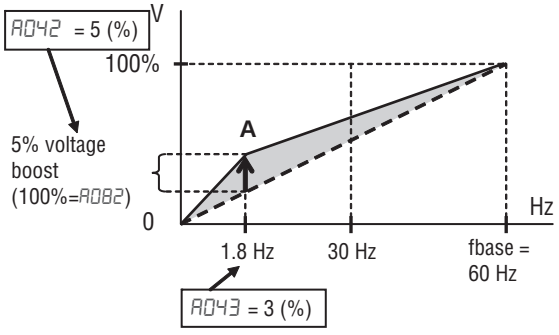

The boost is applied from zero to the base frequency. You set the breakpoint of the boost (point A on the graph) by using parameters A042 and A043. The manual boost is calculated as an addition to the standard V/f curve.

Be aware that running the motor at a low speed for a long time can cause motor overheating. This is particularly true when manual torque boost is ON, or if the motor relies on a built-in fan for cooling.

Voltage gain - Using parameter A045 you can modify the voltage gain of the inverter (see graph at right). This is specified as a percentage of the full scale output voltage. The gain can be set from 20% to 100%. It should be adjusted in accordance with the motor specifications. Gain can be changed even during operation in V/f mode, and while stopped in SLV mode.

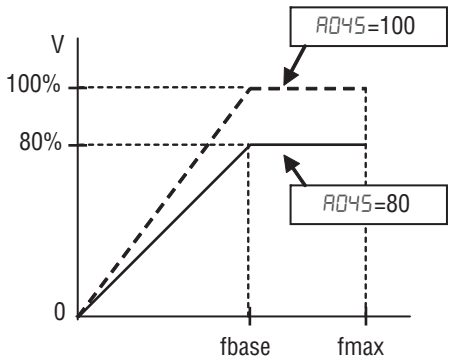

After the setting is done, please be sure to reset (terminal RS on/off) to recalculate the motor constant.

Refrain from change the setting value suddenly (within 10%). Inverter may overvoltage trip due to the rapid change of output voltage.

Voltage compensation gain and slip compensation gain - Using parameters A046 and A047, you can obtain better performance under automatic torque boost mode (A041=01). See following table for the concept of adjustment, including other parameters.

Symptom	Adjustment	Adjust item
Motor torque is not enough at low speed (The motor does not rotate at low speed)	Increase the voltage setting for manual torque boost, step by step/	A042 / A242
	Increase the voltage compensation gain for automatic torque boost, step by step	A046 / A246
	Increase the slip compensation gain for automatic torque boost, step by step	A047 / A247
	Reduce carrier frequency	b083
Motor speed decreases (stalls) when a load is given to the motor	Increase the slip compensation gain for automatic torque boost, step by step	A047 / A247
Motor speed increases when a load is given to the motor	Decrease the slip compensation gain for automatic torque boost, step by step	A047 / A247
The inverter trips due to overcurrent when a load is given to the motor	Decrease the voltage setting for manual torque boost, step by step	A042 / A242
	Decrease the voltage compensation gain for automatic torque boost, step by step	A046 / A246
	Decrease the slip compensation gain for automatic torque boost, step by step	A047 / A247

"A" Function			Run Mode Edit	Defaults	
Func. Code	Name	Description		EU	Units
A041	Torque boost selection	Two options: 00... Manual torque boost 01... Automatic torque boost	×	00	–
A241	2nd torque boost selection		×	00	–
A042	Manual torque boost voltage	Can boost starting torque between 0 and 20% above normal V/f curve, range is 0.0 to 20.0%	✓	1.0	%
A242	2nd manual torque boost voltage		✓	1.0	%
A043	Manual torque boost frequency	Sets the frequency of the V/f breakpoint A in graph (top of previous page) for torque boost, range is 0.0 to 50.0%	✓	5.0	%
A243	2nd manual torque boost frequency		✓	5.0	%

"A" Function			Run Mode Edit	Defaults	
Func. Code	**Name**	**Description**		**EU**	**Units**
A044	V/f characteristics selection	Four available V/f curves; 00... VC (Constant torque) 01... VP (Reduced torque) 02... Free V/F 03... SLV (Sensorless vector control)	×	00	–
A244	2nd V/f characteristics selection		×	00	–
A045	Output voltage gain	Sets voltage gain of the inverter, range is 20 to 100%	✓	100	%
A245	Output voltage gain, 2nd motor		✓	100	%
A046	Automatic torque boost voltage compensation gain	Sets voltage compensation gain under automatic torque boost, range is 0 to 255	✓	100	–
A246	2nd automatic torque boost voltage compensation gain		✓	100	–
A047	Automatic torque boost slip compensation gain	Sets slip compensation gain under automatic torque boost, range is 0 to 255	✓	100	–
A247	2nd automatic torque boost slip compensation gain		✓	100	–

3-5-5 DC Braking (DB) Settings

Normal DC braking performance – The DC braking feature can provide additional stopping torque when compared to a normal deceleration to a stop. DC braking is particularly useful at low speeds when normal deceleration torque is minimal.

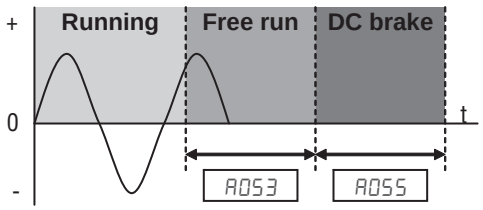

When you set A051 to 01 (Enable during stop), and the RUN command (FW/RV signal) turns OFF, the inverter injects a DC voltage into the motor windings during deceleration below a frequency you can specify (A052).

The braking power (A054) and duration (A055) can both be set. You can optionally specify a wait time before DC braking (A053), during which the motor will free run.

DC Braking - Frequency Detection – You can instead set DC braking to operate during RUN mode only, by setting A051 to 02 (Frequency detection). In this case DC braking operates when the output frequency comes down to the one you specified in A052 while the RUN command is still active. Refer to the graphs figures below.

External DB and Internal DC braking are invalid during the frequency detection mode.

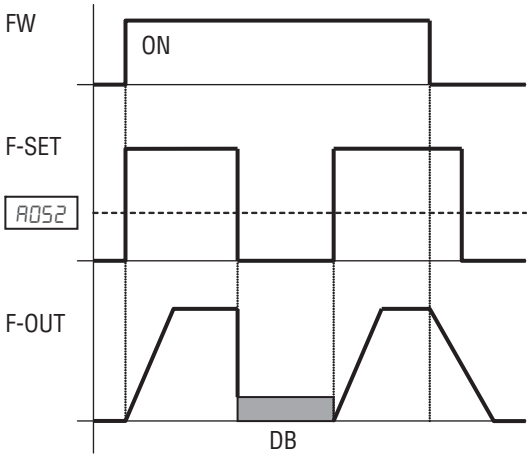

Eample 1: Step change in F-SET

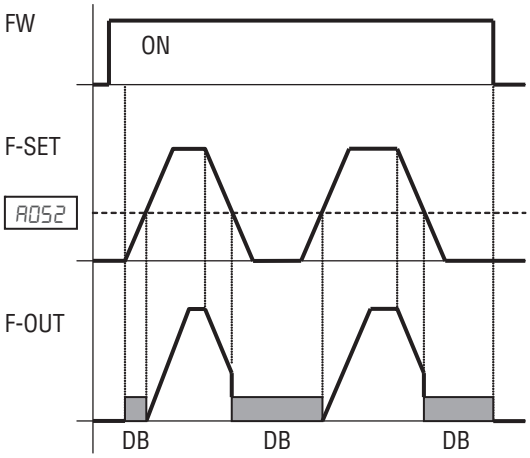

Example 2: Analog change in F-SET

Example 1, (above left) shows the performance with A051=02 with a step-changing frequency reference. In this case, when the reference goes to 0, the inverter immediately starts DC braking because the set point drops below the value specified in A052. DC braking continues until the set point exceeds A052. There will be no DC braking at next downward transition because the FW input is OFF.

Example 2, (above right) shows a gradually changing frequency reference, for example by analog input. In this case, there will be a DC braking period at starting because the frequency set point is lower than the value specified in A052.

⚠ **Caution** Be careful to avoid specifying to long braking time or to high carrier frequency that can cause motor overheating. If you use DC braking, we recommend using a motor with a built-in thermistor, and wiring it to the inverter's thermistor input (see *4-5-8 Thermistor Thermal Protection* on page 211). Also refer to the motor manufacturer's specifications for duty-cycle recommendations during DC braking.

DC braking performance at start can also be set separately (A057 and A058).

And carrier frequency of DC braking performance can also be set separately (A059)..

"A" Function			Run Mode Edit	Defaults	
Func. Code	Name	Description		EU	Units
A051	DC injection braking selection	Three options; select codes: 00... OFF (Disabled) 01... ON (Enabled) 02... ON(FQ) (Frequency control [A052])	×	01	–
A052	DC injection braking frequency	The frequency at which DC braking begins, range is from the start frequency (b082) to 60.00 Hz	×	0.50	Hz
A053	DC injection braking delay time	The delay from the end of controlled deceleration to start of DC braking (motor free runs until DC braking begins), range is 0.0 to 5.0 sec.	×	0.0	sec.
A054	DC injection braking power	Level of DC braking force, settable from 0 to 100%	×	50	%
A055	DC injection braking time	Sets the duration for DC braking, range is from 0.0 to 60.0 seconds	×	0.5	sec.
A056	DC injection braking method selection	Two options; select codes: 00... Edge operation 01... Level operation	×	01	–
A057	Startup DC injection braking power	Level of DC braking force at start, settable from 0 to 100%	×	0	%
A058	Startup DC injection braking time	Sets the duration for DC braking, range is from 0.0 to 60.0 seconds	×	0.0	sec.
A059	DC injection braking carrier frequency	Carrier frequency of DC braking performance, range is from 2.0 to 15.0 kHz	×	5.0	sec.

Additionally is possible to trigger the DC injection by a digital input when the terminal [DB] is turned ON. Set the following parameters to do it

- A053 – DC braking delay time setting. The range is 0.1 to 5.0 seconds.
- A054 – DC braking force setting. The range is 0 to 100%.

The scenarios to the right help show how DC braking works in various situations.

1. Scenario 1 – The [FW] or [RV] terminal is ON. When [DB] is ON, DC braking is applied. When [DB] is OFF again, the output frequency ramps to the prior level.
2. Scenario 2 – The Run command is applied from the operator keypad. When the [DB] terminal is ON, DC braking is applied. When the [DB] terminal is OFF again, the inverter output remains OFF.

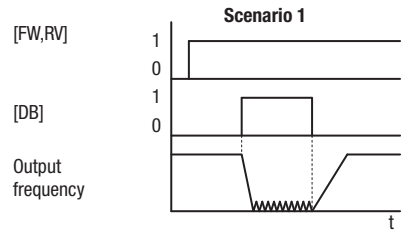

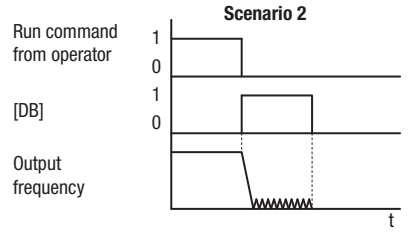

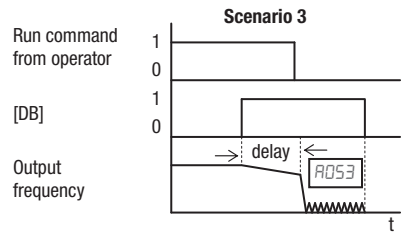

3. Scenario 3 – The Run command is applied from the operator keypad. When the [DB] terminal is ON, DC braking is applied after the delay time set by A053 expires. The motor is in a free-running (coasting) condition. When the [DB] terminal is OFF again, the inverter output remains OFF.

Option Code	Terminal Symbol	Function Name	State	Description
07	DB	External DC Braking	ON	Applies DC injection braking during deceleration
			OFF	Does not apply DC injection braking during deceleration
Valid for inputs:			C001~C007	
Required settings:			A053, A054	

Notes:

- Do not use the [DB] input continuously or for a long time when the DC braking force setting A054 is high (depends on the motor application).
- Do not use the [DB] feature for continuous or high duty cycle as a holding brake. The [DB] input is designed to improve stopping performance. Use a mechanical brake for holding a stop position.

3-5-6 Frequency-related Functions

Frequency Limits - Upper and lower limits can be imposed on the inverter output frequency. These limits will apply regardless of the source of the speed reference. You can configure the lower frequency limit to be greater than zero as shown in the graph. The upper limit must not exceed the rating of the motor or capability of the machinery. The maximum frequency setting (A004/A204) takes precedence over frequency upper limit (A061/A261).

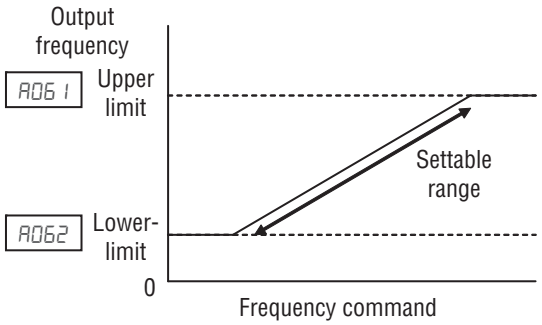

"A" Function			Run Mode Edit	Defaults	
Func. Code	Name	Description		EU	Units
A061	Frequency upper limit	Sets a limit on output frequency less than the maximum frequency (A004/A204). Range is from frequency lower limit (A062/A262) to maximum frequency (A004/A204). 0.0 setting is disabled >0.0 setting is enabled	×	0.00	Hz
A261	2nd frequency upper limit				
A062	Frequency lower limit	Sets a limit on output frequency greater than zero. Range is start frequency (b082) to frequency upper limit (A061/A261) 0.0 setting is disabled >0.0 setting is enabled	×	0.00	Hz
A262	2nd frequency lower limit				

Jump Frequencies - Some motors or machines exhibit resonances at particular speed(s), which can be destructive for prolonged running at those speeds. The inverter has up to three *jump frequencies* as shown in the graph. The hysteresis around the jump frequencies causes the inverter output to skip around the sensitive frequency values.

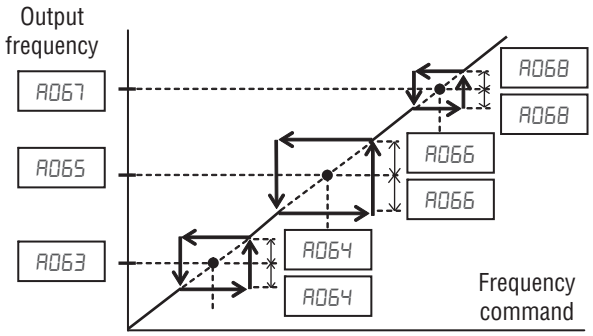

"A" Function			Run Mode Edit	Defaults	
Func. Code	Name	Description		EU	Units
A063 A065 A067	Jump frequency 1 to 3	Up to 3 output frequencies can be defined for the output to jump past to avoid motor resonances (center frequency) Range is 0.00 to 400.00 Hz	×	0.00 0.00 0.00	Hz
A064 A066 A068	Jump frequency width 1 to 3	Defines the distance from the center frequency at which the jump around occurs Range is 0.00 to 10.00 Hz	×	0.50 0.50 0.50	Hz

Acceleration stop/Deceleration stop - The acceleration stop and deceleration stop frequency setting allows you to make the inverter wait, upon starting the motor or upon decelerating the motor, until the motor slip becomes less when the motor load causes a large moment of inertia. Use this function if the inverter trips because of overcurrent when starting or decelerating the motor. This function operates with every acceleration and deceleration pattern, regardless the acceleration and deceleration curve selection (A097 and A098). Instead of setting A069, A070, A154 and A155, acceleration and deceleration can be held by intelligent input configured as "83:HLD".

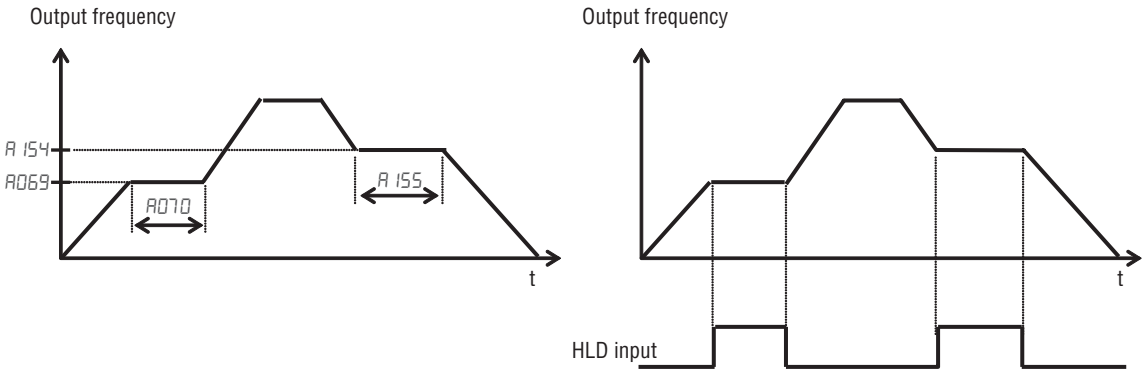

"A" Function			Run Mode Edit	Defaults	
Func. Code	Name	Description		EU	Units
A069	Acceleration stop frequency	Sets the frequency to hold acceleration, range is 0.00 to 400.00 Hz	×	0.00	Hz
A070	Acceleration stop time	Sets the duration of acceleration hold, range is 0.0 to 60.0 seconds	×	0.0	sec.
A154	Deceleration hold frequency	Sets the frequency to hold deceleration, range is 0.00 to 400.00 Hz	×	0.00	Hz
A155	Deceleration hold time	Sets the duration of deceleration hold, range is 0.0 to 60.0 seconds	×	0.0	sec.

3-5-7 PID Control

When enabled, the built-in PID loop calculates an ideal inverter output value to cause a loop feedback process variable (PV) to move closer in value to the set point (SP). The frequency command serves as the SP. The PID loop algorithm will read the analog input for the process variable (you specify the current or voltage input) and calculate the output.

"A" Function			Run Mode Edit	Defaults	
Func. Code	Name	Description		EU	Units
A071	PID selection	Enables PID function, three option codes: 00... OFF (Disabled) 01... ON(+) (Enabled) 02... ON (+/-) (Reverse output enabled)	×	00	–
A072	PID P gain	Proportional gain has a range of 0.00 to 25.00	✓	1.0	–
A073	PID I gain	Integral time constant has a range of 0.0 to 3600.0 seconds	✓	1.0	sec
A074	PID D gain	Derivative time constant has a range of 0.00 to 100.00 seconds	✓	0.00	sec
A075	PID scale	Process Variable (PV), scale factor (multiplier), range of 0.01 to 99.99	×	1.00	–
A076	PID feedback selection	00... OI 01... O 02 ...ModBus (RS485) 03... Pulse (Pulse train frequency) 10... Math (Operation function output)	×	00	–
A077	Reverse PID function	Two option codes: 00: OFF (Deviation = Target value - Feedback value) 01: ON (Deviation = Feedback value - Target value)	×	00	–
A078	PID output limit function	Sets the limit of PID output as percent of full scale, range is 0.0 to 100.0%	×	0.0	–
A079	PID feed forward selection	Selects source of feed forward gain, option codes: 00... Disabled 01... O 02... OI	×	00	–

"A" Function			Run Mode Edit	Defaults	
Func. Code	**Name**	**Description**		**EU**	**Units**
A156	PID sleep function action threshold	Sets the threshold for the action, set range 0.00~400.00 Hz	×	0.00	Hz
A157	PID sleep function action delay time	Sets the delay time for the action, set range 0.0~25.5 sec	×	0.0	sec

Note The setting A073 for the integrator is the integrator's time constant Ti, not the gain. The integrator gain Ki = 1/Ti. When you set A073 = 0, the integrator is disabled.

In standard operation, the inverter uses a reference source selected by parameter A001 for the output frequency, which may be a fixed value (F001), a variable set by the front panel potentiometer, or value from an analog input (voltage or current). To enable PID operation, set A071=01. This causes the inverter to *calculate* the target freq, or setpoint.

A calculated target frequency can have a lot of advantages. It lets the inverter adjust the motor speed to optimize some other process of interest, potentially saving energy as well. Refer to the figure below. The motor acts upon the external process. To control that external process, the inverter must monitor the process variable. This requires wiring a sensor to either the analog input terminal [O] (voltage) or terminal [OI] (current).

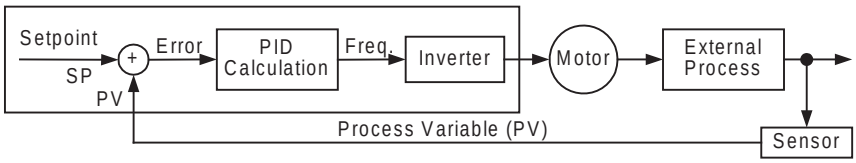

When enabled, the PID loop calculates the ideal output frequency to minimize the loop error. This means we no longer command the inverter to run at a particular frequency, but we specify the ideal value for the process variable. That ideal value is called the *setpoint*, and is specified in the units of the external process variable. For a pump application it may be gallons/minute, or it could be air velocity or temperature for an HVAC unit. Parameter A075 is a scale factor that relates the external process variable units to motor frequency. The figure below is a more detailed diagram of the function.

The PID Disable function temporarily suspends PID loop execution via an intelligent input terminal. It overrides the parameter A071 (PID Enable) to stop PID execution and return to normal motor frequency output characteristics. The use of PID Disable on an intelligent input terminal is optional. Of course, any use of the PID loop control requires setting PID Enable function A071=01.

The PID Clear function forces the PID loop integrator sum = 0. So, when you turn ON an intelligent input configured as [PIDC], the integrator sum is reset to zero. This is useful when switching from manual control to PID loop control and the motor is stopped.

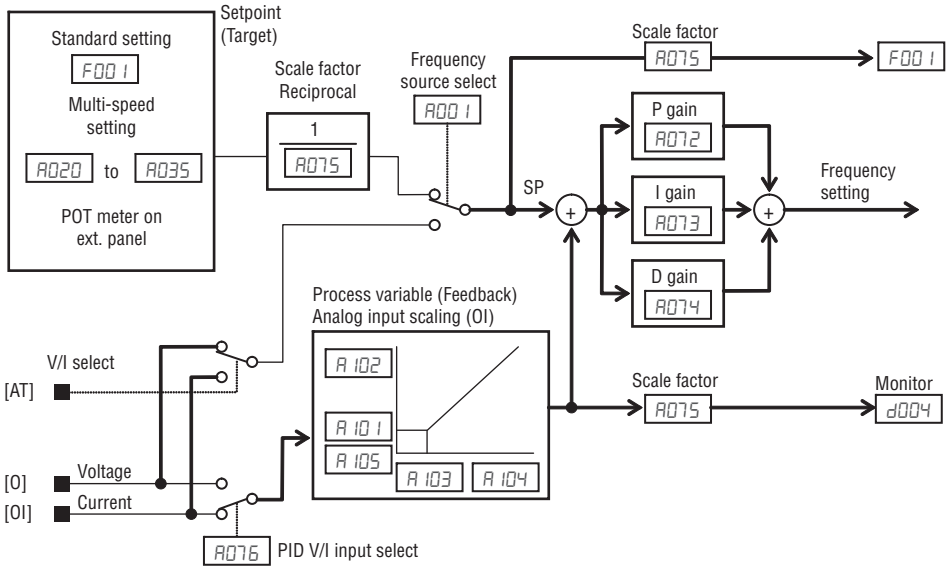

⚠ **Caution** Be careful not to turn PID Clear ON and reset the integrator sum when the inverter is in Run Mode (output to motor is ON). Otherwise, this could cause the motor to decelerate rapidly, resulting in a trip.

Option Code	Terminal Symbol	Function Name	State	Description
23	PID	PID Disable	ON	Disables PID loop execution
			OFF	Allows PID loop execution
24	PIDC	PID Clear	ON	Force the value of the integrator to zero
			OFF	No change in PID loop execution
Valid for inputs:		C001~C007		
Required settings:		A071		
Notes: • The use of [PID] and [PIDC] terminals are optional. Use A071=01 if you want PID loop control enabled all the time.				

3-5-8 PID Loop Configuration

The inverter's PID loop algorithm is configurable for various applications.

PID Output Limit - The PID loop controller has a built-in output limit function. This function monitors the difference between the PID setpoint and the loop output (inverter output frequency), measured as a percentage of the full scale range of each. The limit is specified by parameter A078.

- When the difference |(Setpoint - loop output)| is smaller than or equal to the A078 limit value, the loop controller operates in its normal linear range.
- When the difference |(Setpoint - loop output)| is larger than the A078 limit value, the loop controller changes the output frequency as needed so that the difference does not exceed the limit.

The diagram below shows PID setpoint changes and the related output frequency behavior when a limit value in A078 exists.

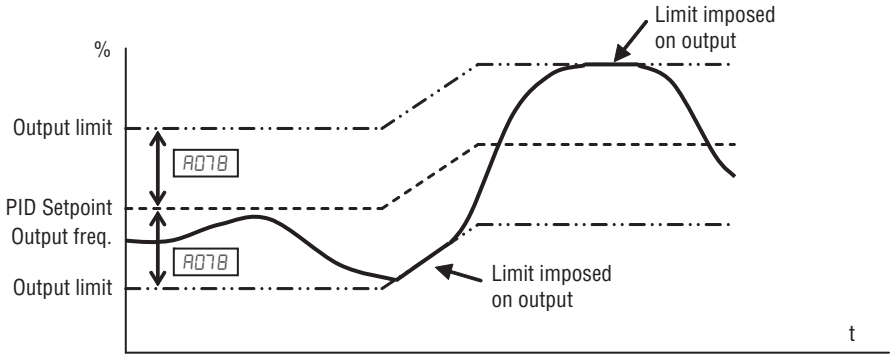

Deviation (error) Inversion - In typical heating loops or ventilation loops, an increase in energy into the process results in an *increasing* PV. In this case, the Loop Error = (SP - PV). For cooling loops, an increase in energy into the process results in a *decreasing* PV. In this case, the Loop Error = -(SP - PV). Use A077 to configure the error term.

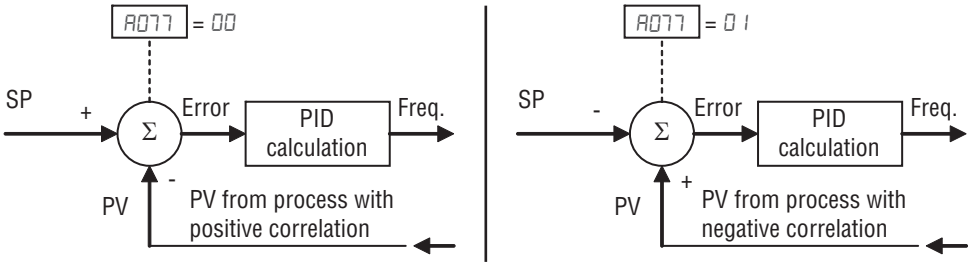

PID deviation output - If PID deviation "ε" exceeds the value in C044, output signal configured as 04 (OD) is activated.

PID feedback comparison output - If PID feedback is below Feedback Low Limit C053 and the inverter is in RUN mode the output turns ON, it remains active until feedback gets over the PID High Limit C052 or inverter pass to Stop mode.

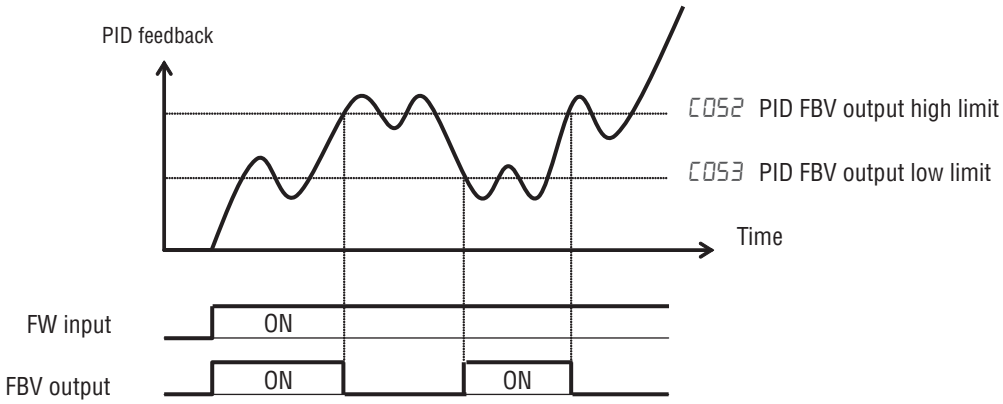

PID scaling - When PID scale parameter (A075) is set, following variables are scaled.

(monitored) = (variable) × (A075)

d004	F001	A011	A012	A020	A220	A021	A022
A023	A024	A025	A026	A027	A028	A029	A030
A031	A032	A033	A034	A035	A101	A102	A145

3-5-9 PID Sleep Function

The inverter shuts off the output when the PID output becomes less than the specified value (A156) in case of PID is set enabled, or shuts off when the frequency command becomes less than the specified value in case of PID is set disabled. And if the PID output or frequency command exceeds the specified value (A156) for a specified period (A157), inverter automatically restarts the operation. This is the PID sleep function.

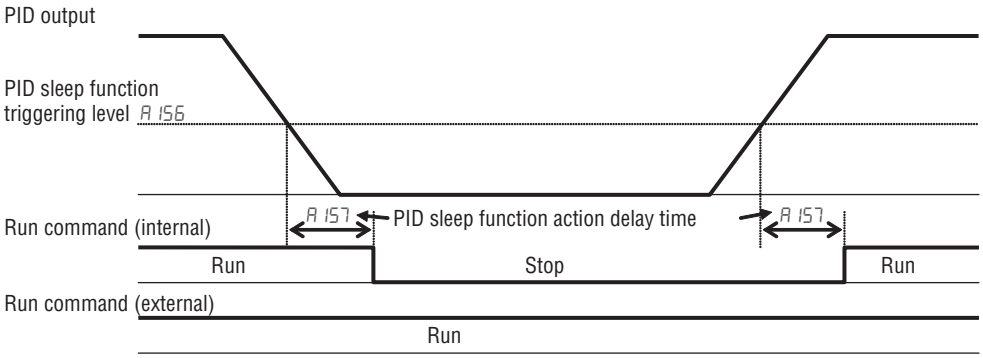

- PID Sleep function is always enabled, even the PID function is disabled.

3-5-10 Automatic Voltage Regulation (AVR) Function

The automatic voltage regulation (AVR) feature keeps the inverter output waveform at a relatively constant amplitude during power input fluctuations. This can be useful if the installation is subject to input voltage fluctuations. However, the inverter cannot boost its motor output to a voltage higher than the power input voltage. If you enable this feature, be sure to select the proper voltage class setting for your motor.

"A" Function			Run Mode Edit	Defaults	
Func. Code	Name	Description		EU	Units
A081	AVR selection	Automatic (output) voltage regulation, selects from three type of AVR functions, three option codes: 00... Always ON 01... Always OFF 02... OFF during deceleration	×	02	–
A281	AVR selection, 2nd motor		×	02	–
A082	AVR voltage selection	200V class inverter settings: 200/215/220/230/240 400V class inverter settings: 380/400/415/440/460/480	×	230/400	V
A282	AVR voltage selection, 2nd motor		×	230/400	V
A083	AVR filter time constant	Define the time constant of the AVR filter, range is 0.000 to 10.000 sec.	×	0.300	sec
A084	AVR deceleration gain	Gain adjustment of the braking performance, range is 50 to 200%	×	100	%

Note The motor behave as generator during deceleration and the energy is regenerated to the drive. As a result, the DC voltage in the inverter increases and cause over-voltage trip when exceeding the OV level. When the voltage is set high, deceleration time can be set shorter thanks to the energy consumption due to the increase of losses in inverter. In order to set deceleration time shorter without over-voltage trip, please try to set AVR off during deceleration or to tune the AVR filter time constant and AVR deceleration gain.

3-5-11 Energy Savings Mode / Optional Accel/Decel

Energy Saving Mode - This function allows the inverter to deliver the minimum power necessary to maintain speed at any given frequency. This works best when driving variable torque characteristic loads such as fans and pumps. Parameter A085=01 enables this function and A086 controls the degrees of its effect. A setting of 0.0 yields slow response but high accuracy, while a setting of 100 will yield a fast response with lower accuracy.

"A" Function			Run Mode Edit	Defaults	
Func. Code	Name	Description		EU	Units
A085	Energy-saving operation mode	Two option codes: 00... Normal operation 01... Eco (Energy-saving operation)	×	00	–
A086	Energy-saving response/ accuracy adjustment	Range is 0.0 to 100.0 %.	✓	50.0	%

The acceleration time is controlled so that the output current is below the level set by the Overload Restriction Function if enabled (Parameters b021, b022, and b023). If Overload Restriction is not enabled, then the current limit used is 150% of the inverter's rated output current.

The deceleration time is controlled so that the output current is maintained below 150% of the inverter's rated current, and the DC bus voltage is maintained below the OV Trip level (400 V or 800 V).

Note If the load exceeds the rating of the inverter, the acceleration time may be increased.

Note If using a motor with a capacity that is one size smaller than the inverter rating, enable the Overload Restriction function (b021) and set the Overload Restriction Level (b022) to 1.5 times the motor nameplate current.

Note Be aware that the acceleration and deceleration times will vary, depending on the actual load conditions during each individual operation of the inverter.

Note When analog input is a source of frequency command, be sure to set analog filter A016=31 (500 ms). Otherwise, there can be the case that this energy saving function doesn't work well.

3-5-12 Second Acceleration and Deceleration Functions

The MX2 inverter features two-stage acceleration and deceleration ramps. This gives flexibility in the profile shape. You can specify the frequency transition point, the point at which the standard acceleration (F002) or deceleration (F003) changes to the second acceleration (A092) or deceleration (A093). Or you can use intelligent input [2CH] to trigger this transition. These profile options are also available for the second motor settings. Select a transition method via A094 as depicted below. Be careful not to confuse the *second acceleration/deceleration settings* with settings for the *second motor*!

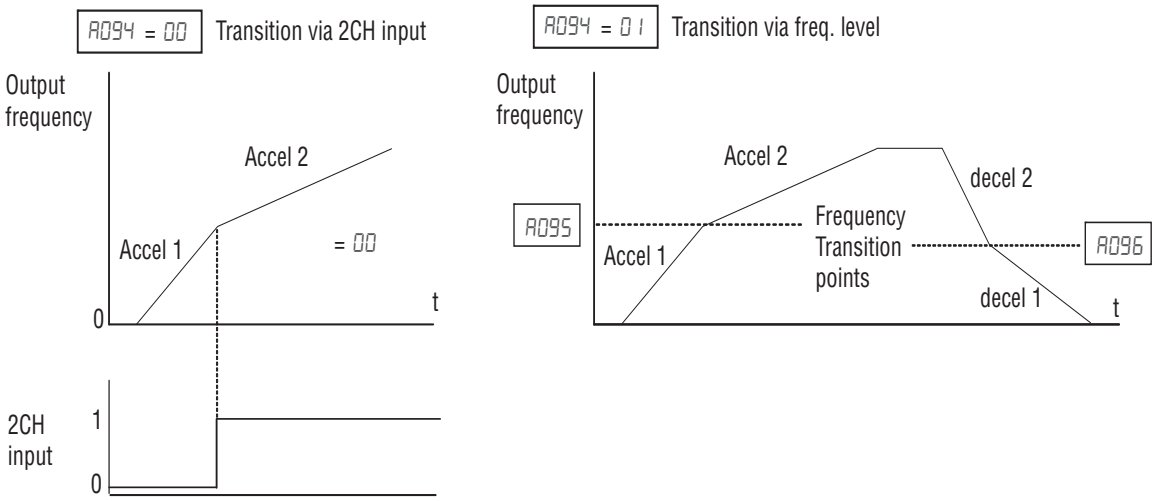

"A" Function			Run Mode Edit	Defaults	
Func. Code	Name	Description		EU	Units
A092	Acceleration time 2	0.00 to 3600.00	✓	10.00	sec
A292	2nd acceleration time 2		✓	10.00	sec
A093	Deceleration time 2		✓	10.00	sec
A293	2nd deceleration time 2		✓	10.00	sec
A094	Select method to switch to Acc2/Dec2 profile	Three options for switching from 1st to 2nd accel/decel: 00... 2CH-Terminal (Switched via multi-function input 09) 01... Preset FQ (Switched by setting) 02... FWD-REV (Enabled only when switching forward/ reverse)	×	00	–
A294	Select method to switch to Acc2/Dec2 profile, 2nd motor		×	00	–
A095	Acc1 to Acc2 frequency transition point	Output frequency at which Accel1 switches to Accel2, range is 0.00 to 400.00 Hz	×	0.00	Hz
A295	Acc1 to Acc2 frequency transition point, 2nd motor		×	0.00	Hz
A096	Dec1 to Dec2 frequency transition point	Output frequency at which Decel1 switches to Decel2, range is 0.00 to 400.00 Hz	×	0.00	Hz
A296	Dec1 to Dec2 frequency transition point, 2nd motor		×	0.00	Hz

Note For A095 and A096 (and for 2nd motor settings), if you set a very rapid Acc1 or Dec1 time (less than 1.0 second), the inverter may not be able to change rates to Acc2 or Dec2 before reaching the target frequency. In that case, the inverter decreases the rate of Acc1 or Dec1 in order to achieve the second ramp to the target frequency.

Switch between accelerations and decelerations could be done also using terminal [2CH], when this input is turned ON the inverter changes the rate of acceleration and deceleration from the initial settings (F002 and F003) to use the second set of acceleration/ deceleration values. When the terminal is turned OFF, the inverter is returned to the original acceleration and deceleration time (F002 acceleration time 1, and F003 deceleration time 1). Use A092 (acceleration time 2) and A093 (deceleration time 2) to set the second stage acceleration and deceleration times.

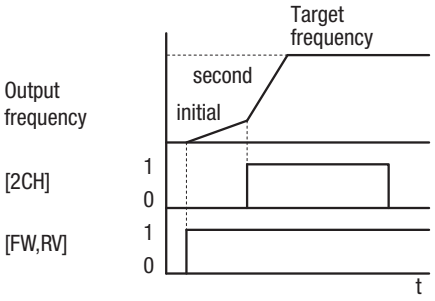

In the graph shown above, the [2CH] becomes active during the initial acceleration. This causes the inverter to switch from using acceleration 1 (F002) to acceleration 2 (A092).

Option Code	Terminal Symbol	Function Name	State	Description
09	2CH	Two-stage Acceleration and Deceleration	ON	Frequency output uses 2nd-stage acceleration and deceleration values
			OFF	Frequency output uses the initial acceleration 1 and deceleration 1 values
Valid for inputs:			C001~C007	
Required settings:			A092, A093, A094=00	

Notes:

- Function A094 selects the method for second stage acceleration. It must be set = 00 to select the input terminal method in order for the [2CH] terminal assignment to operate.

3-5-13 Accel/Decel

Standard acceleration and deceleration is linear. The inverter CPU can also calculate an S-curve acceleration or deceleration curve as shown. This profile is useful for favoring the load characteristics in particular applications.

Curve settings for acceleration and deceleration are indepenently selected. To enable the S-curve, use function A097 (acceleration) and A098 (deceleration).

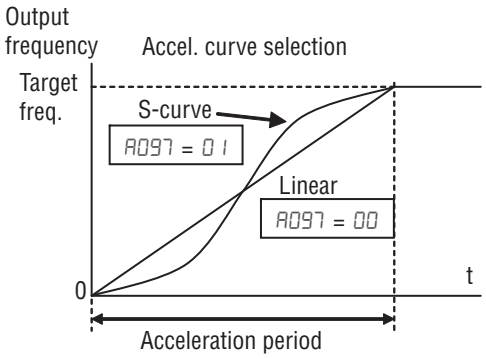

"A" Function			Run Mode Edit	Defaults	
Func. Code	Name	Description		EU	Units
A097	Acceleration curve selection	Set the characteristic curve of Acc1 and Acc2, five options: 00... Linear 01... S curve 02... U curve 03... inv.U curve 04... EL-S curve	×	01	–
A098	Deceleration curve selection	Set the characteristic curve of Dec1 and Dec2, options are same as above (A097)	×	01	–

"A" Function			Run Mode Edit	Defaults	
Func. Code	Name	Description		EU	Units
A131	Acceleration curve parameter	Range is 01 to 10	×	02	–
A132	Deceleration curve parameter	Range is 01 to 10	×	02	–
A150	EL-S-curve ratio 1 during acceleration	Range is 0 to 50%	×	10	%
A151	EL-S-curve ratio 2 during acceleration	Range is 0 to 50%	×	10	%
A152	EL-S-curve ratio 1 during deceleration	Range is 0 to 50%	×	10	%
A153	EL-S-curve ratio 2 during deceleration	Range is 0 to 50%	×	10	%

Acceleration / deceleration pattern summary

Setting	00	01	02	03	04
Curve	Linear	S-curve	U-curve	Inverse U-curve	EL S-curve
A097 (Accel. pattern)	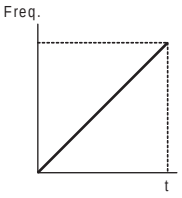	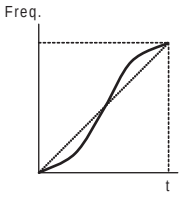	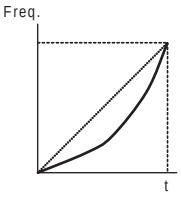	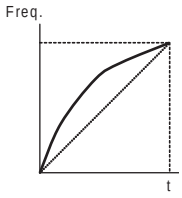	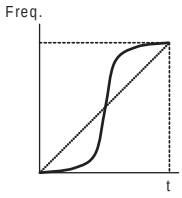
A098 (Decel. pattern)	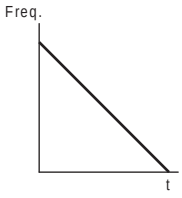	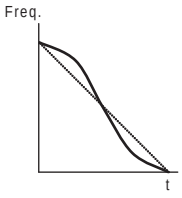	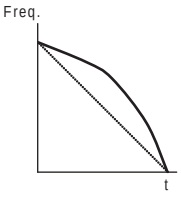	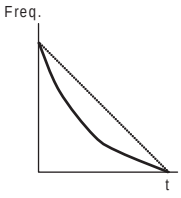	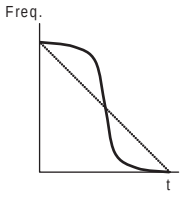
Remarks	Standard pattern.	Effective for preventing the collapse of cargo carried by lift or conveyor for example.	Effective for the tension control of winding machine, to prevent cutting the object to be wound, for example.		Effective for lift application because of the shock less start and stop.

A131 Curve constant (swelling)

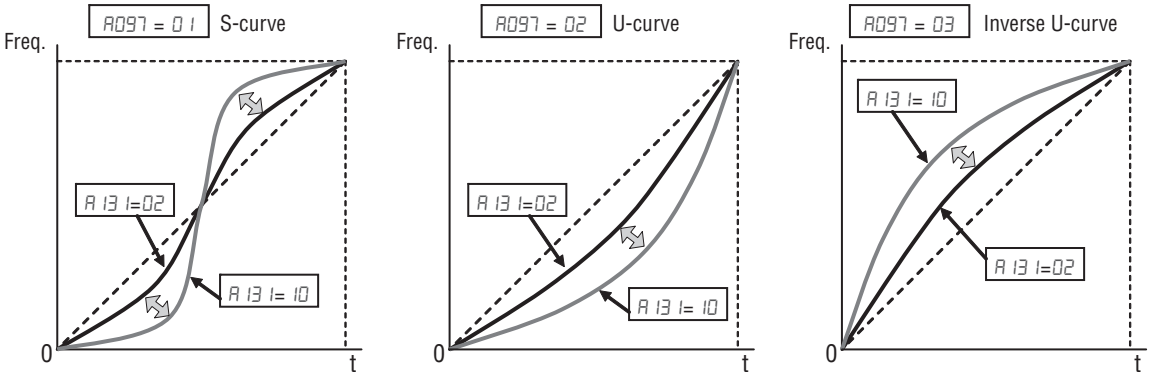

Large A131 value will result in a big swelling. A132 is the same concept as above.

A150~A153 Curvature of EL-S-curve

When using EL-S-curve pattern, you can set the curvatures individually for acceleration and deceleration. If all the curvatures are set to 50%, the EL-S-curve pattern will be equivalent to the S-curve pattern.

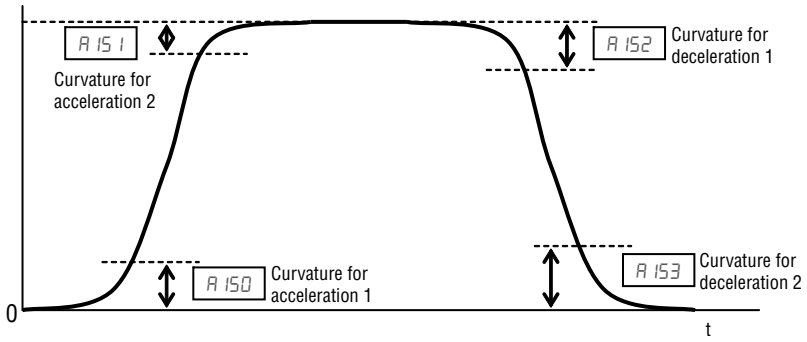

For use of EL-S curve be sure to use select multi-speed as frequency source to avoid nuisance change of frequency during acceleration and deceleration.

3-5-14 Additional Analog Input Settings

Input Range Settings - The parameters in the following table adjust the input characteristics of the analog current input. When using the inputs to command the inverter output frequency, these parameters adjust the starting and ending ranges for the current, as well as the output frequency range. Related characteristic diagrams are located in *3-5-2 Analog Input Settings* on page 93.

Analog sampling setting is the value specified in **AO16**.

"A" Function			Run Mode Edit	Defaults	
Func. Code	Name	Description		EU	Units
A101	OI input active range start frequency	The output frequency corresponding to the analog input range starting point, range is 0.00 to 400.00 Hz	×	0.00	Hz
A102	OI input active range end frequency	The output frequency corresponding to the current input range ending point, range is 0.00 to 400.00 Hz	×	0.00	Hz
A103	OI input active range start ratio	The starting point (offset) for the current input range, range is 0 to OI end ratio	×	20	%
A104	OI input active range end ratio	The ending point (offset) for the current input range, range is OI start ratio to 100	×	100	%
A105	OI input start frequency enable	Two options; select codes: 00... Start FQ (Use OI start frequency [A101]) 01... 0 Hz	×	00	–

Refer to parameter **AO11** to **AO15** for analog voltage input.

Analog Input Calculate Function - The inverter can mathematically combine two input sources into one value. The Calculate function can either add, subtract, or multiply the two selected sources. This provides the flexibility needed by various applications. You can use the result for the output frequency setting (use A001= 10) or for the PID Process Variable (PV) input (use A075=03).

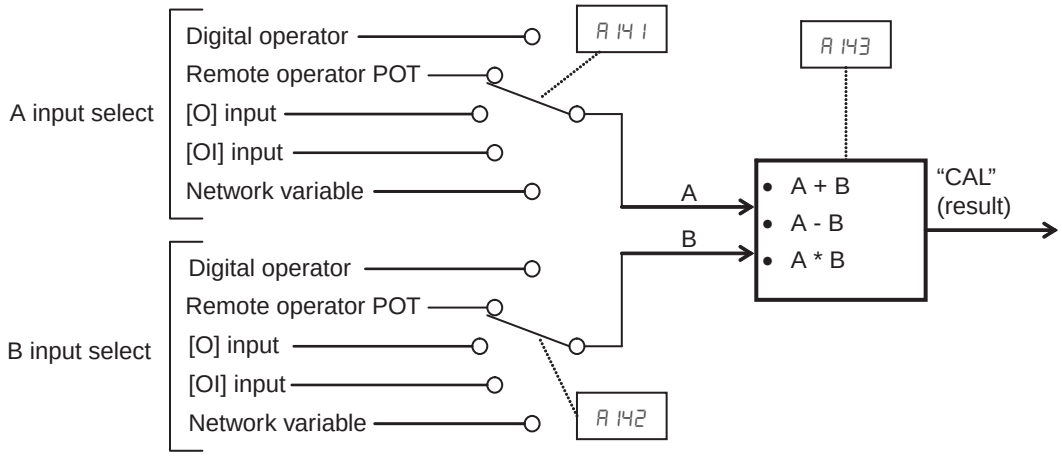

"A" Function			Run Mode Edit	Defaults	
Func. Code	**Name**	**Description**		**EU**	**Units**
A 141	Operation frequency input A setting	00 ...Operator (Digital Operator (F001)) 01 ...VR (Digital Operator (FREQ adjuster)) 02 ...O (Input O) 03 ...OI (Input OI) 04 ...Modbus (RS485) 05 ...Option 1 06 ...Option 2 07 ...Pulse (Pulse train frequency)	×	02	–
A 142	Operation frequency input B setting		×	03	–
A 143	Operator selection	Calculates a value based on the A input source (A 141 selects) and B input source (A 142 selects). Three options: 00... ADD (Addition (A + B)) 01... SUB (Substraction (A - B)) 02... MUL (Multiplication (A x B))	×	00	–

Add Frequency - The inverter can add or subtract on offset value to the output frequency setting which is specified by A001 (will work with any of the five possible sources). The ADD Frequency is a value you can store in parameter A145. the ADD Frequency is summed with or subtracted from the output frequency setting only when the [ADD] terminal is ON. Function A146 selects whether to add or subtract. By configuring an intelligent input as the [ADD] terminal, your application can selectively apply the fixed value in A145 to offset (positively or negatively) the inverter output frequency in real time.

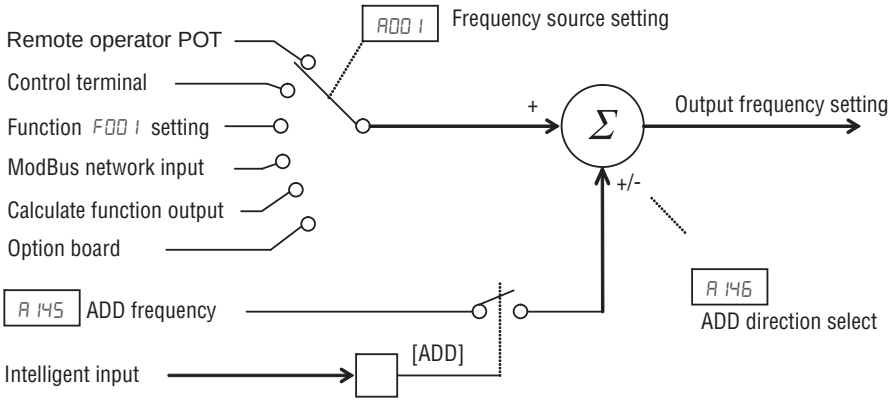

"A" Function			Run Mode Edit	Defaults	
Func. Code	**Name**	**Description**		**EU**	**Units**
A145	Frequency addition amount	An offset value that is applied to the output frequency when the [ADD] terminal is ON. Range is 0.00 to 400.00 Hz	✓	0.00	Hz
A146	Frequency addition direction	Two options: 00... ADD (Add A145 value to output frequency) 01... SUB (Substract A145 value from output frequency)	×	00	–

Input Range Settings - The parameters in the following table adjust the input characteristics of the VR (POT meter on external operator) input. When using the inputs to command the inverter output frequency, these parameters adjust the starting and ending ranges of POT, as well as the output frequency range. Related characteristic diagrams are located in "Analog Input Settings" in this chapter.

Analog sampling setting is the value specified in A016.

"A" Function			Run Mode Edit	Defaults	
Func. Code	**Name**	**Description**		**EU**	**Units**
A161	[VR] input active range start frequency	The output frequency corresponding to the analog input range starting point, range is 0.00 to 400.00 Hz	×	0.00	Hz
A162	[VR] input active range end frequency	The output frequency corresponding to the current input range ending point, range is 0.00 to 400.00 Hz	×	0.00	Hz
A163	[VR] input active range start current	The starting point (offset) for the POT range, range is 0 to 100%	×	0	%
A164	[VR] input active range end voltage	The ending point (offset) for the POT range, range is 0 to 100%	×	100	%
A165	[VR] input start frequency enable	Two options; select codes: 00: Start FQ 01: 0 Hz	×	01	–

3-6 "B" Group: Fine Tuning Functions

The "B" Group of functions and parameters adjust some of the more subtle but useful aspects of motor control and system configuration.

3-6-1 Automatic Restart Mode

The restart mode determines how the inverter will resume operation after a fault causes a trip event. The five options provide advantages for your applications. Frequency matching allows the inverter to read the motor speed by virtue of its residual magnetic flux and restart the output at the corresponding frequency. The inverter can attempt a restart a certain number of times depending on the particular trip event:

- Over-current trip, restart up to 3 times
- Over-voltage trip, restart up to 3 times

When the inverter reaches the maximum number of restarts (3), you must power cycle the inverter to reset its operation.

Other parameters specify the allowable under-voltage level and the delay time before restarting. The proper settings depend on the typical fault conditions for your application, the necessity of restarting the process in unattended situations, and whether restarting is always say.

If the actual power failure time is shorter than the b002 set value, inverter resumes from the set frequency in b011.

The resumption mode is called "active frequency matching" and the inverter performs reduced voltage start to avoid over-current trip.

If the motor current exceeds the b030 set value during this period, the inverter decelerates according to the b029 set value and helps to reduce the motor current.

Power failure < allowable power fail time (b022), Inverter resumes

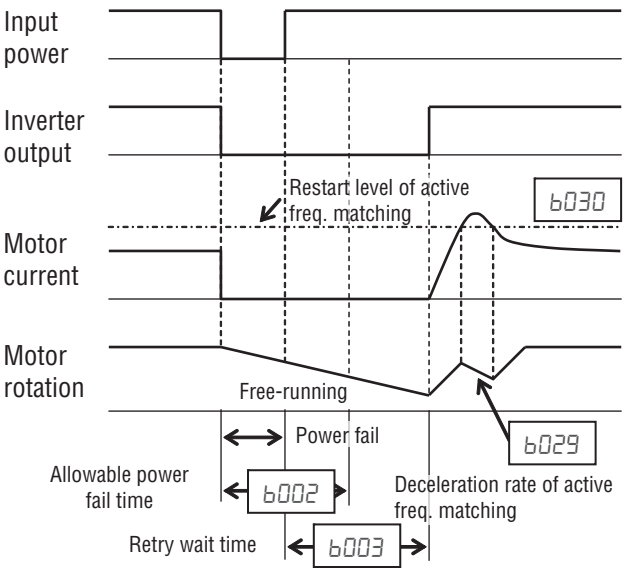

When the motor current is less than b030, the inverter increases motor speed toward the set speed. The inverter continues this retry process until the motor speed comes to the previous set speed.

Overload restriction (b021~b028) is not valid when active frequency matching is activated.

If the actual power failure time is longer than the b002 set value, the inverter does not resume and the motor will coast to stop.

Automatic restart (retry) related parameters.

"B" Function			Run Mode Edit	Defaults	
Func. Code	Name	Description		EU	Units
b001	Retry selection	Select inverter restart method, Five option codes: 00... Trip (Alarm) 01... 0 Hz start 02... f-match (Frequency matching start) 03... f-match-Trip (Trip after frequency matching deceleration stop) 04... Actv. f-match (Active Frequency Matching restart)	×	00	–
b002	Allowable momentary power interruption time	The amount of time a power input under-voltage can occur without tripping the power failure alarm. Range is 0.3 to 25.0 sec. If under-voltage exists longer than this time, the inverter trips, even if the restart mode is selected.	×	1.0	sec.
b003	Retry wait time	Time delay after under-voltage condition goes away, before the inverter runs motor again. Range is 0.3 to 100.0 seconds.	×	1.0	sec.
b004	Momentary power interruption/ undervoltage trip during stop selection	Three option codes: 00... OFF (Disabled) 01... ON (Enabled) 02... Decel-OFF (Disabled during stop and deceleration stop)	×	00	–
b005	Momentary power interruption retry time selection	Two option codes: 00... 16 times 01... No limit	×	00	–
b007	Frequency matching lower limit frequency setting	Restart the motor from 0Hz if the frequency becomes less than this set value during the motor is coasting, range is 0.00 to 400.00 Hz	×	0.00	Hz
b008	Trip retry selection	Select inverter restart method, Five option codes: 00... TRIP 01... 0 Hz start 02... f-match (Frequency matching start) 03... f-match-Trip (Trip after frequency matching deceleration stop) 04... Actv. F-match (Active Frequency Matching restart)	×	00	–
b010	Overvoltage/overcurrent retry time selection	Range is 1 to 3 times	×	3	times
b011	Trip retry wait time	Range is 0.3 to 100.0 sec.	×	1.0	sec

3-6-2 Active Frequency Matching Restart

Goal of the active frequency matching is the same as normal frequency matching. Difference is the method. Please select the suitable one for your application.

"B" Function			Run Mode Edit	Defaults	
Func. Code	Name	Description		EU	Units
b028	Active Frequency Matching restart level	Sets the current level of active freq. matching restart, range is 0.32 x Rated current to 3.20 x Rated current	×	Rated current	A
b029	Active Frequency Matching restart parameter	Sets the deceleration rate when active freq. matching restart, range is 0.10 to 3000.0, resolution 0.1	×	0.50	sec.
b030	Starting frequency at Active Frequency Matching restart	Three option codes: 00... Off FQ (Frequency at interruption) 01... Max.FQ (Max. Frequency) 02... Set FQ (Set frequency)	×	00	–

3-6-3 Electronic Thermal Overload Alarm Setting

The thermal overload detection protects the inverter and motor from overheating due to an excessive load for inverter. It uses a current/inverse time curve to determine the trip point, for motor is possible to select between different curves.

For the motor, use the parameters b013 and b910 to select the torque characteristic that matches your load. This allows the inverter to utilize the best thermal overload characteristic for your application.

The torque developed in a motor is directly proportional to the current in the windings, which is also related to the heat generated (and temperature, over time).

Therefore, you must set the thermal overload threshold in terms of current (amperes) for parameter b012. The range is 20% to 100% of the rated current for each inverter model. If the current exceeds the level you specify, the inverter will trip and log an event (error E 05) in the history table. The inverter turns the motor output OFF when tripped. Separate settings are available for the second motor (if applicable) as shown in the following table.

"B" Function			Run Mode Edit	Defaults	
Func. Code	Name	Description		EU	Units
b012	Electronic thermal level	0.20 x Rated current to 1.00 x Rated current	×	Rated current	A
b212	2nd electronic thermal level		×	Rated current	A
b013	Electronic thermal characteristics selection	Select from three curves, option codes: 00... Reduced TRQ (Reduced torque characteristics) 01... Const TRQ (Constant torque characteristics) 02... Free set (Free setting)	×	00	
b213	2nd electronic thermal characteristics selection		×	00	
b015	Free setting, electronic thermal frequency 1	Range is 0.00 to b017	×	0.00	Hz
b016	Free setting, electronic thermal current 1	Range is 0.00 to rated current	×	0.00	Amps
b017	Free setting, electronic thermal frequency 2	Range is 0.00 to b019	×	0.00	Hz

"B" Function			Run Mode Edit	Defaults	
Func. Code	Name	Description		EU	Units
b018	Free setting, electronic thermal current 2	Range is 0.00 to rated current	×	0.00	Amps
b019	Free setting, electronic thermal frequency 3	Range is 0.00 to 400.00 Hz	×	0.00	Hz
b020	Free setting, electronic thermal current 3	Range is 0 to rated current	×	0.00	Amps
b910	E. thermal Dec Mode	00: Off 01: Fixed Linear 02: LinDec Time 03: DecTimeCnst	×	00	
b911	E. thermal Dec Time	0.10 to 100000.00	×	600.00	s
b912	E. thermal Dec TimeCnst	0.10 to 100000.00	×	120.00	s
b913	E. thermal AccmGain	1.0 to 200.0	×	100.0	%

⚠ WARNING When parameter b012, level of electronic thermal setting, is set to motor FLA rating (Full Load Ampere nameplate rating), the inverter provides solid state motor overload protection at 115% of motor FLA or equivalent. If parameter b012 exceeds the motor FLA rating, the motor may overheat and be damaged. Parameter b012, level of electronic thermal setting, is a variable parameter.

- Inverter and motor models are be treat separately:
  - E05 error will be reported in case of Motor overload
  - E38 error will be reported in case of Inverter overload
- Inverter protection is set to constant torque characteristic and inverter rated current

3-6-3-1 Electronic Thermal Characteristic Curve

The characteristic curve depends on dual rate setting in b049 as follows.

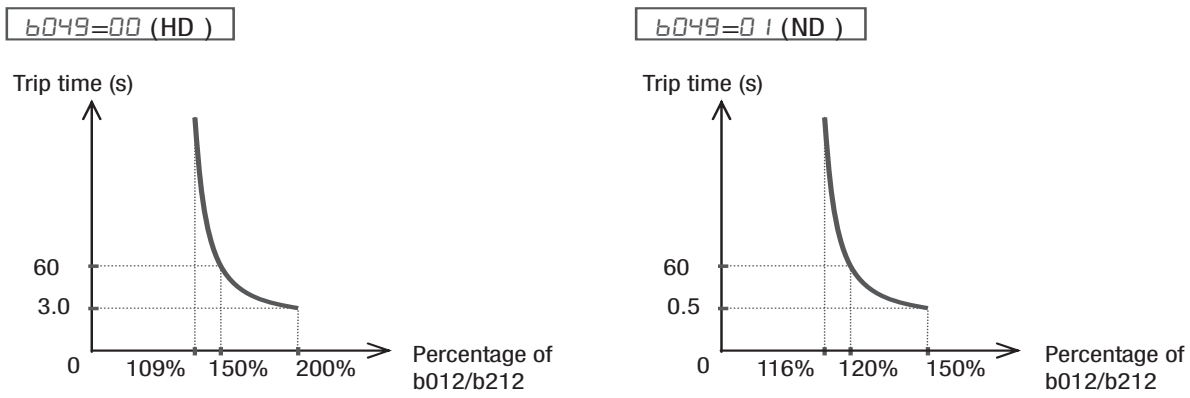

The characteristic curve is unique, but reduction rate depending on frequency is selected in b013.

• Reduced Torque (b013=00)

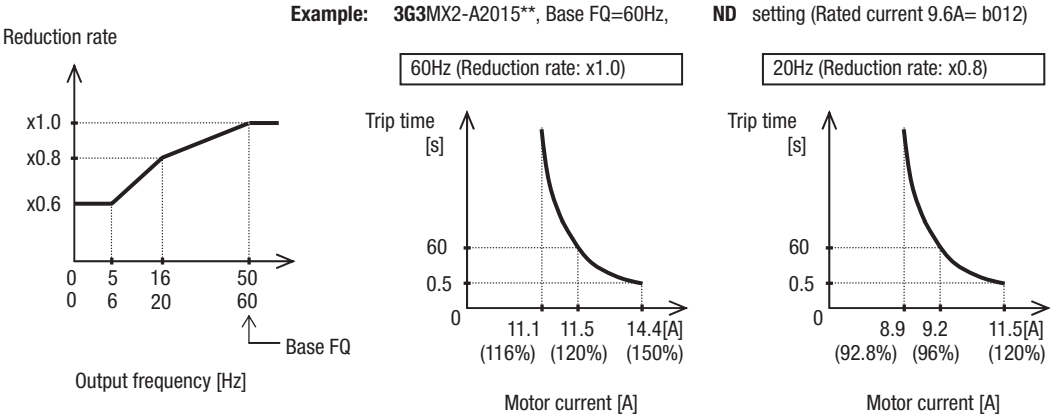

• Constant Torque (b013=01)

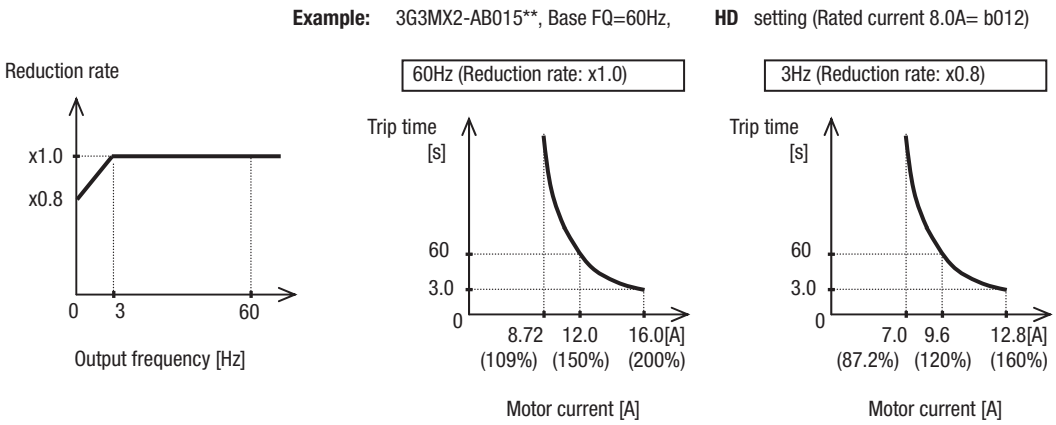

• Free setting (b013=02)

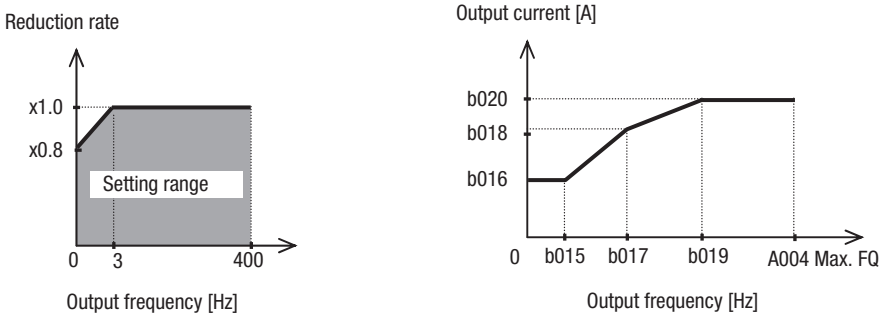

3-6-3-2 Motor Cooling Rate

• Several cooling patterns are added

If b910 is set to zero exactly the same model than inverter will be used.

The other options allow to adjust the cooling ramp on a better way and avoid the overload detection in some cases where really the motor is not getting hot.

Thermal decrement mode Off (b910 = 00)

With this method the thermal level increases when the output current is bigger than internal level value (defined in b012). The increase rate is proportional to the overload value.

When this thermal level counter (d104) reach the 100% and overload error E05 is detected. This trip could not be reset within 10 seconds after it appears.

The thermal counter is clear after 10 minutes cycle or when the Reset command is used or at inverter power ON.

Thermal decrement mode with fixed linear ramp (b910 = 01)

This setting also increase the counter when the output current is bigger than the internal level but on this case a ramp down of the counter is applied when the output current below this level. The decrement rate is fixed to a value of 100% for 10 minutes. Next drawing describes the operation:

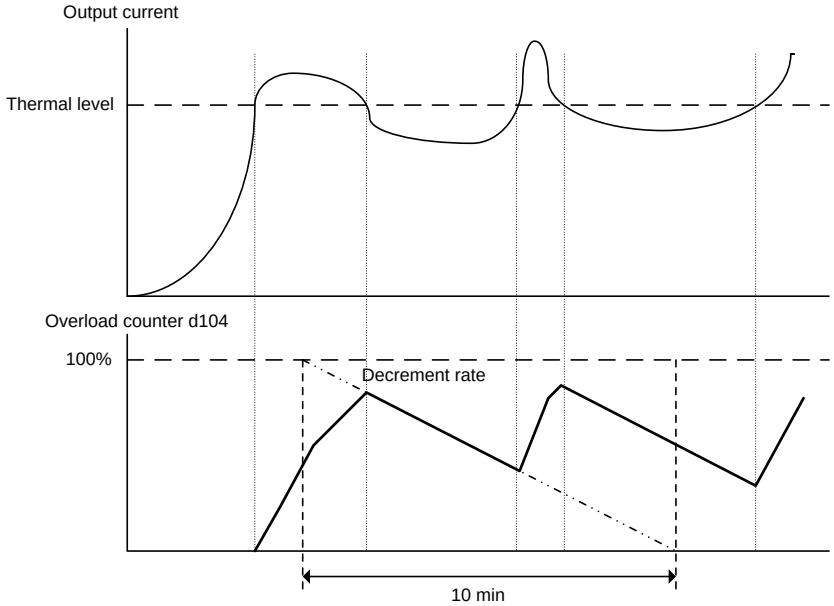

Thermal decrement mode with linear decrement ramp (b910 = 02)

Like with previous option the overload counter will decrease on a linear way when the output current is below the thermal level. But on this case the decrement rate could be adjusted by parameter b911.

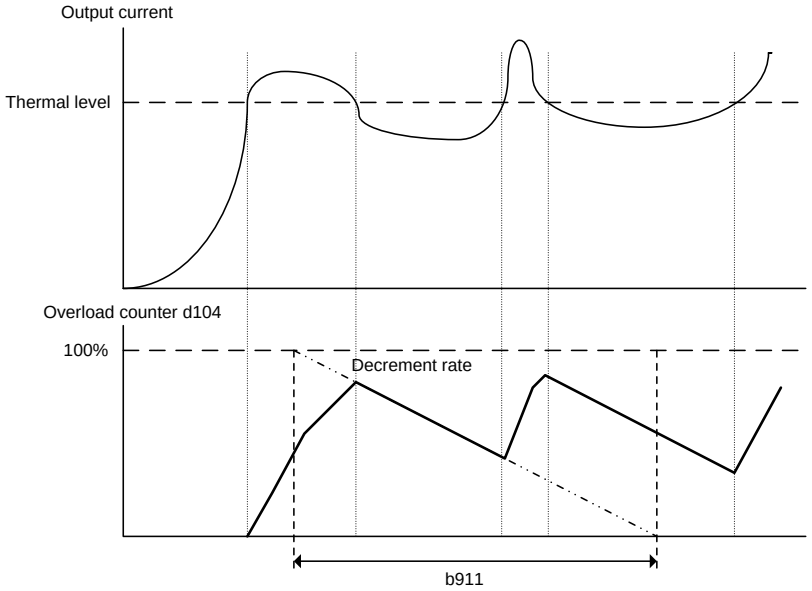

Thermal decrement mode by time constant (b910 = 03)

For this option the decrement is performed by a time constant value defined on parameter b912.

The curve from 100% to 0 is approximately 5 times the b912 value.

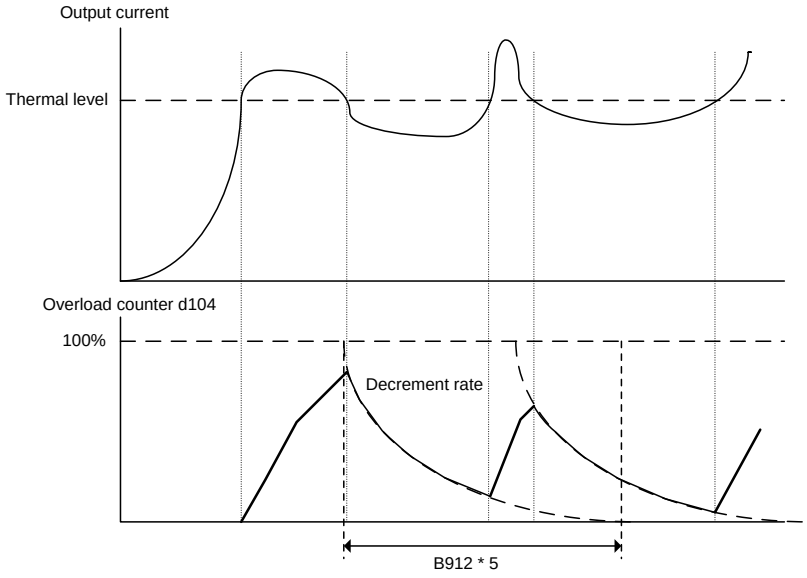

3-6-3-3 Electronic Thermal Warning Output

You can configure this function so that the inverter outputs a warning signal before the electronic thermal protection operates against motor overheat. You can also set the threshold level to output a warning signal with the electronic thermal warning level setting in function "C061".

To output the warning signal, assign parameter "13" (THM) to one of the intelligent output terminals [11] to [12] (C021 to C022), or to the relay output terminal (C026).

3-6-4 Current limitation Related Functions

Overload Restriction: b022 If the inverter's output current exceeds a preset current level you specify during acceleration or constant speed, the overload restriction feature automatically reduces the output frequency during powering drive (and can increase the speed during regeneration) to restrict the overload. This feature does not generate an alarm or trip event. You can instruct the inverter to apply overload restriction only during constant speed, thus allowing higher currents for acceleration. Or, you may use the same threshold for both acceleration and constant speed.

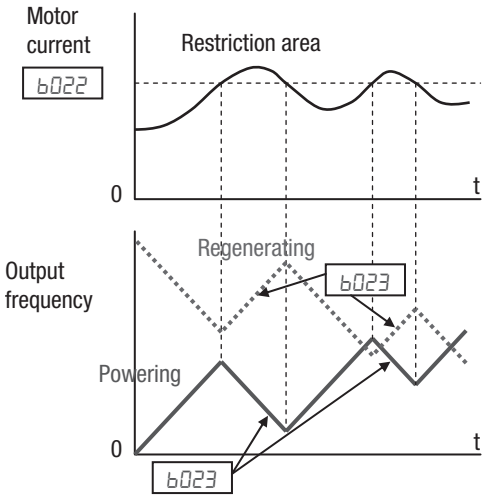

You can specify two types of overload restriction operation by setting functional items **b021**, **b022**, **b023**, and **b024**, **b025**, **b026** separately. To switch between these two is done by assigning "**39** (OLR)" to an intelligent input terminal and make it ON/OFF.

When the inverter detects an overload, it must decelerate the motor to reduce the current until it is less than the threshold. You can choose the rate of deceleration that the inverter uses to lower the output current.

Over-current Trip Suppression: b027 – The Over-current Trip Suppression function monitors the motor current and actively changes the output frequency profile to maintain the motor current within the limits. Although "LAD" refers to "linear acceleration / deceleration", the inverter only "STOPs" the acceleration and deceleration ramp so that it will not cause an over-current trip event.

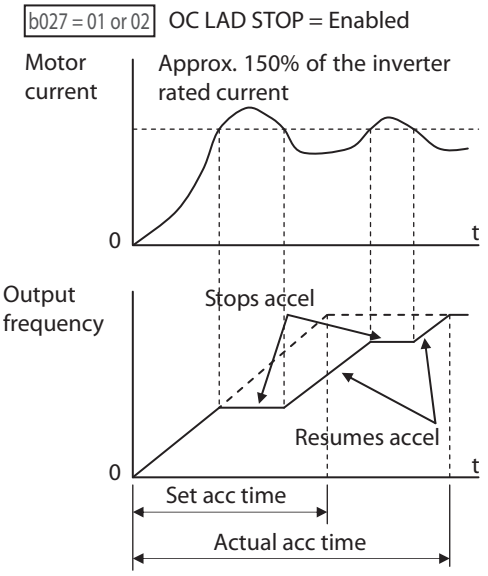

The graph at right shows an inverter output profile that starts acceleration to a constant speed. At two different points during the acceleration, motor current increases and exceeds the fixed level of Over-current Trip Suppression level.

When the Over-current Trip Suppression feature is enabled by **b027=01**, the inverter stops the acceleration ramp in each case until the motor current level is again less than the threshold value, which is approximately 180% of the rated current of the inverter.

When using the Over-current Trip Suppression feature, please note the following:

- When the feature is enabled (**b027=01**), the actual acceleration may be longer than the value set by parameters **F002**/**F202** in some cases.
- With **b027=02** the behavior will be the same than with option 01, only difference is that reduced voltage start will be used when the ramp is changed.

- The Over-current Trip Suppression feature does not operate by maintaining a constant motor current. So it is still possible to have an over-current trip event during extreme acceleration.

"B" Function			Run Mode Edit	Defaults	
Func. Code	**Name**	**Description**		**EU**	**Units**
b021	Overload limit selection	Select the operation mode during overload conditions, four options, option codes: 00 OFF (Disabled) 01 ON-Acc/Cnst (Enabled in acceleration/constant speed operation) 02 ON-Cnst (Enabled in constant speed operation) 03 ON-A/C(R) (Enabled in acceleration/constant speed operation (Accelerates during regeneration))	×	01	–
b221	Overload limit selection, 2nd motor		×	01	–
b022	Overload limit level	Sets the level of overload restriction, between 20% and 200% of the rated current of the inverter, setting resolution is 1% of rated current 0.32 x Rated current to 3.20 x Rated current	×	1.5 (HD)/ 1.2 (ND) x Rated current	Amps
b222	Overload limit level, 2nd motor		×		Amps
b023	Overload limit parameter	Sets the deceleration rate when inverter detects overload, range is 0.1 to 3000.0, resolution 0.1	×	1.0	sec.
b223	Overload limit parameter, 2nd motor		×	1.0	sec.
b024	Overload limit selection 2	Select the operation mode during overload conditions, four options, option codes: 00 OFF (Disabled) 01 ON-Acc/Cnst (Enabled in acceleration/constant speed operation) 02 ON-Cnst (Enabled in constant speed operation) 03 ON-A/C(R) (Enabled in acceleration/constant speed operation (Accelerates during regeneration))	×	01	–
b025	Overload limit level 2	Sets the level of overload restriction, between 20% and 200% of the rated current of the inverter, setting resolution is 1% of rated current 0.32 x Rated current to 3.20 x Rated current	×	Rated curr. x 1.5	
b026	Overload limit parameter 2	Sets the deceleration rate when inverter detects overload, range is 0.1 to 3000.0, resolution 0.1	×	1.0	sec.
b027	Overcurrent suppression function *	Two option codes: 00 OFF (Disabled) 01 ON (Enabled) 02 ON (Enabled with reduced voltage)	×	00	–

This digital input allows you to change the parameter sets of overload restriction. (Please refer to chapter 3 for the detailed description of the overload restriction function.)

Option Code	Terminal Symbol	Function Name	State	Description
39	OLR	Overload restriction source changeover	ON	Parameter sets b024, b025, b026 are enabled.
			OFF	Parameter sets b021, b022, b023 are enabled.
Valid for inputs:		C001~C007		
Required settings:		b021~b026		

3-6-5 Software Lock Mode

The software lock function keeps personnel from accidentally changing parameters in the inverter memory. Use b031 to select from various protection levels.

The table below lists all combinations of b031 option codes and the ON/OFF state of the [SFT] input. Each Check ✓ or Ex × indicates whether the corresponding parameter(s) can be edited. The Standard Parameters column below shows access in permitted for some lock modes. These refer to the parameter tables throughout this chapter, each of which includes a column titled *Run Mode Edit* as shown to the right.

	Run Mode Edit	
	×	
	✓	

The marks (Check ✓ or Ex ×) under the "Run Mode Edit" column title indicate whether access applies to each parameter as defined in the table below. In some lock modes, you can edit only F001 and the Multi-speed parameter group that includes A020, A220, A021–A035, and A038 (Jog). However, it does not include A019, Multi-speed operation selection. The editing access to b031 itself is unique, and is specified in the right-most two columns below.

b031 Lock Mode	[SFT] Intelligent Input	Standard Parameters		F001 and Multi-Speed	b031	
		Stop	Run	Stop and Run	Stop	Run
00	OFF	✓	Run mode edit access	✓	✓	×
	ON	×	×	×	✓	×
01	OFF	✓	Run mode edit access	✓	✓	×
	ON	×	×	✓	✓	×
02	(ignored)	×	×	×	✓	×
03	(ignored)	×	×	✓	✓	×
10	(ignored)	✓	High level access	✓	✓	✓

Note Since the software lock function b031 is always accessible, this feature is not the same as password protection used in other industrial control devices. So if you want to use password function, use parameter b037 together with the b031. See section 4-104 for detailed explanation of the password function.

"B" Function			Run Mode Edit	Defaults	
Func. Code	**Name**	**Description**		**EU**	**Units**
b031	Soft lock selection	Prevents parameter changes, in five options, option codes: 00 Lock (SFT) (Data other than b031 cannot be changed when terminal SFT is ON.) 01 Only FQ (SFT) (Data other than b031 and the specified frequency parameter cannot be changed when terminal SFT is ON.) 02 Lock (Data other than b031 cannot be changed.) 03 Only FQ (Data other than b031 and the specified frequency parameter cannot be changed.) 10 RUN chg mode (Data other than parameters changeable during operation cannot be changed.) *See Appendix C on page 357 for the accessible parameters in this mode.*	×	01	–

Note To disable parameter editing when using b031 lock modes 00 and 01, assign the [SFT] function to one of the intelligent input terminals.

Option Code	Terminal Symbol	Function Name	State	Description
15	SFT	Software Lock	ON	The keypad and remote programming devices are prevented from changing parameters
			OFF	The parameters may be edited and stored
Valid for inputs:		C001~C007		
Required settings:		b031 (excluded from lock)		

When the terminal [SFT] is turned ON, the data of all the parameters and functions (except the output frequency, depending on the setting of b031) is locked (prohibited from editing). When the data is locked, the keypad keys cannot edit inverter parameters. To edit parameters again, turn OFF the [SFT] terminal input.

3-6-6 Motor Cable Length Parameter

To achieve higher motor control performance, the MX2 inverter has the Motor Cable Length Parameter setting b033. Normally there is no need to adjust this parameter, however in case of long motor cable and/or shielded cable, where there is a comparatively higher earth capacitance, set this parameter higher to achieve better motor control performance.

Note that the parameter is indicative and no formula to calculate the suitable value. Normally, longer the motor cable, bigger the set value. Please adjust depending on your system.

For 11 and 15 kW inverter, it is not needed to set b033.

"B" Function			Run Mode Edit	Defaults	
Func. Code	Name	Description		EU	Units
b033	Motor cable length parameter	Set range is 5 to 20	✓	10	–

3-6-7 Run/power ON warning time

Inverter outputs the operation time over (RNT) or the plug-in time over (ONT) signal when the time specified as the run/power ON warning time (b034) is exceeded.

"B" Function			Run Mode Edit	Defaults	
Func. Code	Name	Description		EU	Units
b034	Run time/Power ON time setting	Range is, 0: Warning disabled 1 to 9999: 10~99,990 hrs (unit: 10) 1000 to 6553: 100,000~655,350 hrs (unit: 100)	×	0	Hrs.

1. Operation time over (RNT) signal

To use this signal function, assign function "11 (RNT)" to one of the intelligent output terminals [11] to [12] (C021 to C022), or to the alarm relay output (C026). Specify the run/power-ON warning time (b034).

2. Plug-in time over (ONT) signal

To use this signal function, assign function "12 (ONT)" to one of the intelligent output terminals [11] to [12] (C021 to C022), or to the alarm relay output (C026). Specify the run/power-ON warning time (b034).

3-6-8 Rotation restriction related parameters

Rotation direction restriction: b035 – The rotation direction restriction function allows you to restrict the direction of the motor rotation. This function is effective regardless of the specification of operation command input device (e.g., control terminal or integrated operator). If an operation command to drive the motor in a restricted direction is given, the inverter (display) shows (□□□□).

Reverse run protection: b046 – The reverse run protection function is effective when "03 (sensorless vector control)" is specified for the V/F characteristic selection (A044). For control reasons, especially during motor operation at low speed, the inverter may output a frequency that instructs the motor to rotate in the direction opposite to that specified by the operation command.

"B" Function			Run Mode Edit	Defaults	
Func. Code	Name	Description		EU	Units
b035	Rotation direction limit selection	Three option codes: 00 Free (Forward and Reverse are enabled.) 01 FWD (Only Forward is enabled.) 02 REV (Only Reverse is enabled.)	×	00	–
b046	Reverse rotation prevention selection	Two option codes: 00 OFF (Disabled) 01 ON (Enabled)	×	00	–

3-6-9 Reduced voltage start

The reduced voltage start function enables you to make the inverter increase the output voltage gradually when starting the motor.

Set a small value for the reduced voltage start selection (b036) if you intend to increase the start torque. On the other hand, setting a small value will cause the inverter to perform full-voltage starting and to easily trip because of over-current.

"B" Function			Run Mode Edit	Defaults	
Func. Code	Name	Description		EU	Units
b036	Reduced voltage startup selection	Set range, 0 (Reduced voltage startup time: small) to 255 (Reduced voltage startup time: large)	×	02	–

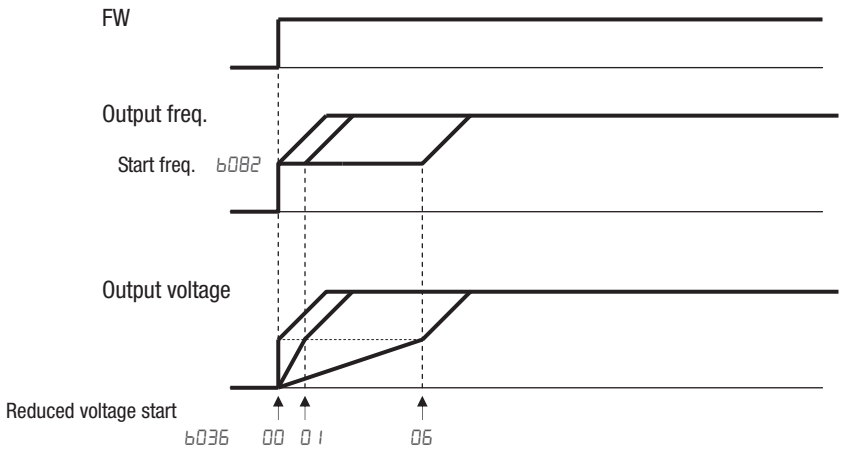

3-6-10 Display related parameters

Function code display restriction: b037 – The function code display restriction allows you to arbitrarily switch the display mode or the display content on the integrated operator.

"B" Function			Run Mode Edit	Defaults	
Func. Code	Name	Description		EU	Units
b037	Display selection	Seven option codes: 00 All (Complete display) 01 Utilized (Individual display of functions) 02 User (User setting) 03 Compare (Data comparison display) 04 Basic (Basic display) 05 Monitor	×	00	

1. Function-specific display mode (b037=01)

If a specific function has not been selected, the monitor does not show the parameters concerning the specific function. Following table lists the details of display conditions.

No.	Displayed conditions		Displayed func. codes when condition fulfilled.
1	2nd motor	C001...C007=08	F202, F203, A201 to A204, A220, A244, A245, A261, A262, A281, A282, A292 to A296, b212, b213, b221 to b223, C241, H202 to H204, H206
2	Drive Programming	A017=01,02	d023 to d027, P100 to P131
3	Sensorless vector control	A044=03	d009, d010, d012, b040 to b046, C054 to C059, H001, H005, H020 to H024, H030 to H034, P033, P034, P036 to P040
4	Sensorless vector control for 2nd motor	C001...C007=08 AND A244=03	d009, d010, d012, b040 to b046, C054 to C059, H001, H205, H220 to H224, H230 to H234, P033, P034, P036 to P040
5	Free V/F control	A044=02 OR C001...C007=08 AND A244=02	b100 to b113
6	Free setting of electronic-thermal	b013=02 OR C001...C007=08 AND b213=02	b015 to b020
7	VC or VP1.7 control	A044=00,01	A041 to A043,A046, A047
8	VC or VP1.7 control for 2nd motor	C001...C007=08 AND A244=00,01	A241 to A243, A246, A247
9	DC breaking	A051=01,02 OR C001...C007=07	A052 to A059
10	PID	A071=01,02	d004, A072 to A079, A156, A157, C044, C052, C053
11	EzCOM	C096=01,02	C098 to C100, P140 to P155
12	Curving accel/deceleration	A097,A098=01...04	A131, A132, A150 to A153
13	Controlled deceleration	b050=01,02,03	b051 to b054
14	Breaking	b120=01	b121 to b127
15	Decel. overvolt. suppress	b130=01,02	b131 to b134
16	Simple positioning	P003=01	d008, P004, P011, P012, P015, P026, P027, P060to P073, P075, P077, H050, H051

2. User setting display mode (b037=02)

The monitor displays only the codes and items that are arbitrarily assigned to user parameters (U001~U032), except codes d001, F001 and b037.

Refer to User parameter (U001~U032) section for the detail.

3. Data comparison display mode (b037=03)

The monitor displays only the parameters that have been changed from the factory settings. All monitoring indications dxxx and code F001, b190, b191 are always displayed.

4. Basic display mode (b037=04)

The monitor displays basic parameters. (The monitor display is the factory setting.) The following table lists the parameters that can be displayed in basic display mode.

No.	Code displayed	Item
1	d001 ~ d104	Monitoring indication
2	F001	Output frequency setting
3	F002	Acceleration time (1)
4	F003	Deceleration time (1)

No.	Code displayed	Item
5	F004	Keypad Run key routing
6	A001	Frequency source
7	A002	Run command source
8	A003	Base frequency
9	A004	Maximum frequency
10	A005	[AT] selection
11	A020	Multi-speed frequency 0
12	A021	Multi-speed frequency 1
13	A022	Multi-speed frequency 2
14	A023	Multi-speed frequency 3
15	A044	V/F characteristic curve selection
16	A045	V/F gain
17	A085	Energy saving operation mode
18	b001	Restart mode on power failure / under volt. trip
19	b002	Allowable undervoltage power failure time
20	b008	Restart mode on over volt. / over currnt. trip
21	b011	Retry wait time on over volt. / over currnt. trip
22	b037	Function code display restriction
23	b083	Carrier frequency
24	b084	Initialization mode (parameters or trip history)
25	b130	Decel. overvoltage suppression enable
26	b131	Decel. overvoltage suppression level
27	b180	Initialization trigger
28	b190	Password A setting
29	b191	Password A for authentication
30	C021	Output [11] function
31	C022	Output [12] function
32	C036	Alarm relay active state

Initial display selection: b038 – The initial display selection function allows you to specify data displayed on the integrated operator on powerup. The table below lists the display items selectable. (The factory setting is 01 [d001].)

Panel display selection: b150 – When an external operator is connected to MX2 via RS-422 port, the display is locked and shows only one parameter configured by b150.

Automatic return to the initial display: b164 – 10 min. after the last key operation, display returns to the initial parameter set by b038.

Frequency conversion coefficient setting: b086 – By setting b086, converted output frequency is monitored in d007. (d007 = d001 x b086)

Frequency set in monitoring: b163 – If 01 is set in b163, frequency can be changed by up/down key in monitor display d001 and d007.

Action selection in case of external operator disconnection: b165 – When an external operator is disconnected, the inverter behaves according to b165 setting.

"B" Function			Run Mode Edit	Defaults	
Func. Code	Name	Description		EU	Units
b038	Initial screen selection	000 Func. code that ↵ key pressed last displayed.(*) 001~060 d001~d060 displayed 201 F001 displayed 202 B display of LCD operator	×	001	–

"B" Function			Run Mode Edit	Defaults	
Func. Code	Name	Description		EU	Units
b086	Frequency conversion coefficient	Specify a constant to scale the displayed frequency for d007 monitor, range is 0.01 to 99.99	✓	1.00	–
b 150	Display ex.operator connected	When an external operator is connected via RS-422 port, the built-in display is locked and shows only one "d" parameter configured in: d001 ~ d060	✓	001	–
b 160	1st parameter of Dual Monitor	Set any two "d" parameters in b 160 and b 161, then they can be monitored in d050. The two parameters are switched by up/down keys. Set range: d001 ~ d030	✓	001	–
b 161	2nd parameter of Dual Monitor		✓	002	–
b 163	Freq. set in monitoring	Two option codes: 00 OFF 01 ON	✓	00	
b 164	Auto return initial display	10 min. after the last key operation, display returns to the initial parameter set by b038. Two option codes: 00 OFF 01 ON	×	00	
b 165	Ex. operator com. Loss action	Five option codes: 00 Trip 01 Decel-Trip 02 Ignore 03 Free RUN 04 Decel-Stop	✓	02	

Note If the power is off with displaying "000" after the set, b038 comes when power is on again.

3-6-11 User Parameter Registration

Parameter group "U" is the user parameter. Any function code can be register on these 32 parameters. When display mode is set to be "user parameter" (b037= 02) then U001 to U032 and d001, F001, b037 are displayed.

"B" Function			Run Mode Edit	Defaults	
Func. Code	Name	Description		EU	Units
b037	Display selection	Seven option codes: 00 All (Complete display) 01 Utilized (Individual display of functions) 02 User (User setting) 03 Compare (Data comparison display) 04 Basic (Basic display) 05 Monitor	×	00	
U001 - U032	User parameters 1 to 32	Set range, "no", d001~P183	×		

3-6-12 Automatic User Parameter Registration

The automatic user parameter setting function allows you to make the inverter automatically record changed function codes in U001 to U032. You can use the stored function codes as a history of data change. To enable this function, select "01" (enabling automatic user parameter setting) for the b039.

When any data is changed and [↵] key is pressed, the function code will be stored in U001 to U032 sequentially.

The latest data is in U001, and the oldest one is in U032.

Stored function codes in U001 to U032 are not duplicated. If duplicated function code is changed, old existing function code is deleted. If number of changed function code exceeds 32, the oldest one in U032 is deleted.

"B" Function			Run Mode Edit	Defaults	
Func. Code	Name	Description		EU	Units
b039	User parameter automatic setting function selection	Two option codes: 00 OFF (Disabled) 01 ON (Enabled)	×	00	
U001 - U032	User parameters 1 to 32	Set range, "no", d001~P183	×		

3-6-13 Torque Limit Function

Torque limit function allows you to limit the motor output when 03 (SLV) is set for the V/F characteristics set at parameter A044. You can select one of the following modes with the torque limit selection (b040).

1. Quadrant-specific setting mode (b040=00)

In this mode, individual torque limit value to be applied to four quadrants (i.e. forward powering, reverse regeneration, reverse powering and forward regeneration) are set as the torque limits 1 to 4 (b041 to b044), respectively.

2. Terminal-switching mode(b040=01)

In this mode, the torque limit values set in the torque limits 1 to 4 (b041 to b044) are switched from one another according to the combination of the states of torque limit switch terminals 1 and 2 (TRQ1 and TRQ2) assigned to intelligent input terminals. A single selected torque limit is valid in all the operating states.

3. Analog voltage input mode(b040=02)

In this mode, the torque limit value is set by a voltage applied to the control circuit terminal O. The voltage range 0 to 10V corresponds to the torque limit value range 0 to 200%. A single selected torque limit is valid in all the operating states.

If parameter "40 (TL: whether to enable torque limitation)" has been assigned to any intelligent input terminal, the torque limit mode selected by the setting of b040 is enabled only when the TL terminal is turned ON. When the TL terminal is turned OFF, torque limit settings are invalid, and the maximum torque setting is applied as a torque limit.

It the TL function has not been assigned to the intelligent input terminal, the torque limit mode selected by the setting of b040 is always enabled.

Each torque limit value used for this function is expressed as a ratio of the maximum torque generated when the inverter outputs its maximum current on the assumption that the maximum torque is 200%.

Note that each torque limit value does not represent an absolute value of torque. The actual output torque varies depending on the motor.

It the torque limited signal function (TRQ) is assigned to an intelligent output terminal, the TRQ signal will turn ON when the torque limit function operates.

100% torque is referred to inverter rated current. Absolute torque value is up the motor to be combined.

"B" Function			Run Mode Edit	Defaults	
Func. Code	Name	Description		EU	Units
b040	Torque limit selection	Four option codes: 00 4-quadrant (Four-quadrant separate setting) 01 TRQ input (Terminal switch) 02 [O] input (Analog input) 03 Option 1	×	00	
b041	Torque limit 1 (fwd/power)	Torque limit level in forward powering quadrant, range is 0 to 200%/no(disabled)	×	200	%
b022	Torque limit 2 (rev/regen.)	Torque limit level in reverse regen. quadrant, range is 0 to 200%/ no(disabled)	×	200	%
b043	Torque limit 3 (rev/power)	Torque limit level in reverse powering quadrant, range is 0 to 200%/no(disabled)	×	200	%
b044	Torque limit 4 (fwd/regen.)	Torque limit level in forward regen. quadrant, range is 0 to 200%/ no(disabled)	×	200	%
b045	Torque LADSTOP selection	Two option codes: 00 OFF (Disabled) 01 ON (Enabled)	×	00	

When "00" is specified for the torque limit selection (b040), the torque limits 1 to 4 apply as shown to the top right.

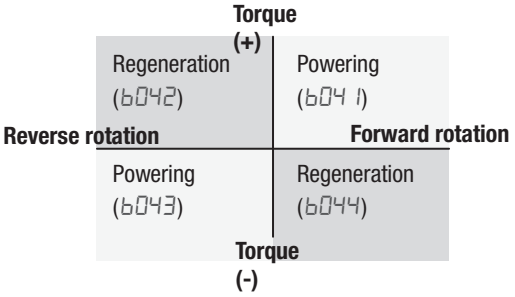

When "00" is specified for the torque limit selection (b040), the torque limit 1 to 4 are set as shown to the bottom right. The torque limit 1 to 4 are switched by the torque limit switches 1 and 2 assigned to intelligent input terminals 7 and 8, respectively for example:

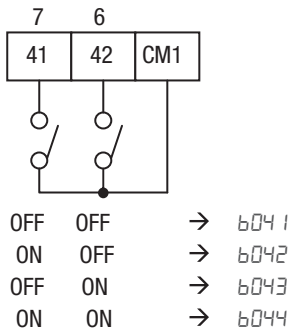

When applying the torque limit function to the motor operation at low speed, also use the overload restriction function to get more stable performance.

Related parameters: Over torque/under torque signal

3-6-14 Controlled Stop Operation at Power Loss

Controlled stop operation at power loss helps avoid tripping or free-running (coasting) of the motor when power is lost while in run mode. The inverter controls the internal DC bus voltage while decelerating the motor, and brings the motor to a controlled stop.

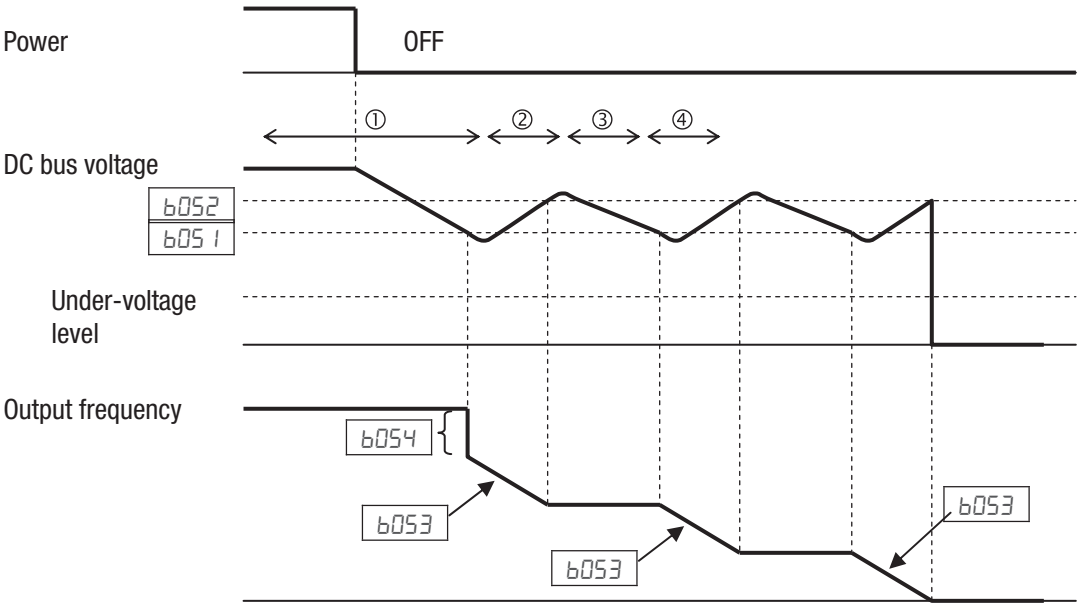

Should power be lost while the inverter is in run mode, this function will have the following effect:

1. When the internal DC bus voltage of the inverter comes down to the set level of **b051**, the inverter decreases the output frequency by the amount set in **b054**. (During this interval the DC bus voltage rises due to regeneration, so does not reach the UV level.)
2. The inverter then continues deceleration according to the value set in **b053**. If the DC bus voltage rises up to the set value of **b052**, the inverter stops deceleration to avoid OV tripping.
3. During this interval, the DC bus voltage decreases again due to lack of input power.
4. When the DC bus voltage comes down to the set value of **b051**, the inverter starts deceleration according to the set value of **b053** again. This process will be repeated as needed until the motor is brought to a stop.

Note If the DC bus voltage comes down to the UV level during this operation, the inverter trips with under-voltage and motor will free-run (coast) to a stop.

Note If the set value of **b052**<**b051**, then the inverter internally swaps the **b052** and B051 values. However the displayed values are not changed.

Note This function cannot be interrupted until it is completed. So if the power is restored during this operation, wait until the operation is done (motor stops) and then give the run command.

"B" Function			Run Mode Edit	Defaults	
Func. Code	Name	Description		EU	Units
b050	Selection of non-stop function at momentary power interruption	Four option codes: 00 OFF (Disabled) 01 ON (Enabled) 02 V-Cnst(STOP) (Enabled (deceleration stop)) 03 V-Cnst(RUN)	×	00	–
b051	Starting voltage of non-stop function at momentary power interruption	Setting of DC bus voltage to start controlled decel. operation. Range is 0.0 to 1000.0	×	220.0 *1	V
b052	Stop deceleration level of non-stop function at momentary power interruption	Setting the OV-LAD stop level of controlled decel. operation. Range is 0.0 to 1000.0	×	360.0* 1	V
b053	Deceleration time of non-stop function at momentary power interruption	Range is 0.01 to 3600.00	×	1.00	sec
b054	Deceleration starting width of non-stop function at momentary power interruption	Setting of initial freq. drop. Range is 0.00 to 10.00 Hz	×	0.00	Hz

*1 Value is double for 400V type inverter

3-6-15 Window Comparator, Analog disconnection

The window comparator function outputs signals when the values of analog inputs O and OI are within the maximum and minimum limits specified for the window comparator. You can monitor analog inputs with reference to arbitrary levels (to find input terminal disconnection and other errors).

You can specify a hysteresis width for the maximum-limit and minimum-limit levels of the window comparator. You can also specify limit levels and a hysteresis width individually for analog inputs O and OI.

You can fix the analog input data to be applied to an arbitrary value when WCO or WCOI is output. For this purpose, specify a desired value as the operation level at O/OI disconnection (b070/b071/b072). When "no" is specified, the analog input data is reflected as input.

Output values of Odc and OIDc are the same as those of WCO and WCOI, respectively.

"B" Function			Run Mode Edit	Defaults	
Func. Code	Name	Description		EU	Units
b060	Window comparator O upper limit level	Set range, {Min.-limit level (b061) + hysteresis width (b062)x2} to 100% (Minimum of 0%)	✓	100	%
b061	Window comparator O lower limit level	Set range, 0 to {Max.-limit level (b060) - hysteresis width (b062)x2}% (Maximum of 0%)	✓	0	%
b062	Window comparator O hysteresis width	Set range, 0 to {Max.-limit level (b060) - Min.-limit level (b061)}/2% (Maximum of 10%)	✓	0	%
b063	Window comparator OI upper limit level	Set range, {Min.-limit level (b064 + hysteresis width (b065)x2} to 100% (Minimum of 0%)	✓	100	%
b064	Window comparator OI lower limit level	Set range, 0 to {Max.-limit level (b063) - hysteresis width (b065)x2}% (Maximum of 0%)	✓	0	%
b065	Window comparator OI hysteresis width	Set range, 0 to {Max.-limit level (b063) - Min.-limit level (b064)}/2% (Maximum of 10%)	✓	0	%
b070	Analog operation level at O disconnection	Set range, 0 to 100%, or "no" (ignored)	×	no	-
b071	Analog operation level at OI disconnection	Set range, 0 to 100%, or "no" (ignored)	×	no	-

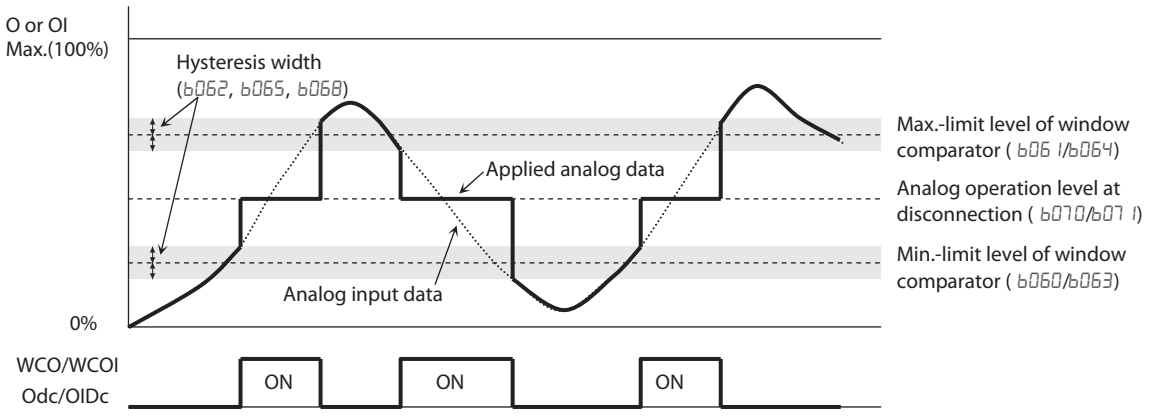

3-6-16 Ambient Temperature Setting

Sets the ambient temperature where the inverter is installed, so to calculate internally the lifetime of cooling fan. Incorrect data will result in an incorrect calculation result.

"B" Function			Run Mode Edit	Defaults	
Func. Code	Name	Description		EU	Units
b075	Ambient temperature	Set range is, -10~50°C	×	40	°C

3-6-17 Watt-hour related

When the watt-hour monitoring function is selected, the inverter displays the watt-hour value of electric power given to the inverter. You can also convert the value to be displayed to gain data by setting the cumulative input power display gain setting (b079). Value displayed by function d015 is expressed as follows:

$$d015 = \frac{\text{Watt-hour (kWh)}}{\text{Watt-hour gain setting (b079)}}$$

The watt-hour input gain can be set within the range 1 to 1000 in step of 1.

You can clear the watt-hour data by specifying "01" for the watt-hour clearance function (b078) and pressing the Stop/Reset key. You can also clear the watt-hour data at an intelligent input terminal by assigning parameter "53" (KHC: watt-hour clearance) to the terminal.

When the watt-hour display gain setting (b078) is set to " 1000", the watt-hour data up to 999000 (kWh) can be displayed.

"B" Function			Run Mode Edit	Defaults	
Func. Code	Name	Description		EU	Units
b078	Integrated power clear	Two option codes: 00 OFF 01 ON (press Stop/Reset key then clear)	✓	00	
b079	Integrated power display gain	Set range is, 1.~1000.	×	1	

3-6-18 Carrier frequency (PWM) related

Carrier frequency adjustment: b083 – The internal *switching frequency* of the inverter circuitry (also called the *chopper frequency)*. It is called the carrier frequency because the lower AC power frequency of the inverter "rides" the carrier. The faint, high-pitched sound you hear when the inverter is in Run Mode is characteristic of switching power supplies in general. The carrier frequency is adjustable from 2.0kHz to 15kHz. The audible sound decreases at the higher frequencies, but RFI noise and leakage current may be increased. Refer to the specification derating curves in Chapter 1 to determine the maximum allowable carrier frequency setting for your particular inverter and environmental conditions. Refer also to **b089** for automatic carrier frequency reduction.

Note The carrier frequency setting must stay within specified limits for inverter-motor applications that must comply with particular regulatory agencies. For example, European CE-approved application requires the carrier to be 3 kHz or less.

Automatic carrier frequency reduction: b089 – The automatic carrier frequency reduction automatically reduces the carrier frequency according to the increase in output current. To enable this function, specify "01" for automatic carrier frequency reduction selection (**b089**).

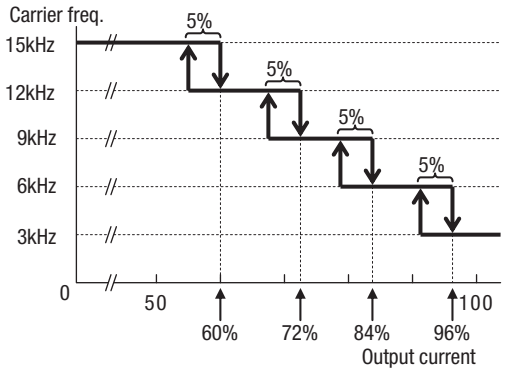

When the output current increases to 60%, 72%, 84%, or 96% of the rated current, this function reduces the carrier frequency to 12, 9, 6, or 3 kHz, respectively. This function restores the original carrier frequency when the output decreases to 5% lower than each reduction start level.

The rate of carrier frequency reduction is 2 kHz per second. The maximum limit of carrier frequency change by this function is

the value specified for the carrier frequency setting (**b083**); the minimum limit is 3 kHz.

Note If 3 kHz or less freq. has been specified for **b083**, this function is disabled regardless of the setting of **b089**.

[Remark: Above graph is for schematic concept and the profile is a subject to change reflecting the temperature test.

"B" Function			Run Mode Edit	Defaults	
Func. Code	Name	Description		EU	Units
b083	Carrier frequency	Sets the PWM carrier (internal switching frequency), range is 2.0 to 15.0 kHz	×	10.0	kHz
b089	Automatic carrier reduction	Three option codes: 00 OFF (Disabled) 01 ON (Current) 02 ON (heatsink)	×	01	

3-6-19 Miscellaneous Settings

The miscellaneous settings include scaling factors, initialization modes, and others. This section covers some of the most important settings you may need to configure.

Start frequency adjustment: b082 – When the inverter starts to run, the output frequency does not ramp from 0Hz. Instead, it steps directly to the start frequency (b082), and the ramp proceeds upward from there.

Initialization related: b084, b085, b094, b180 – These functions allow you to restore the factory default settings. Please refer to *6-3 Restoring Factory Default Settings* on page 279.

Stop key enable function: b087 – This function allows you to decide whether the stop key on the integrated operator is enabled or not.

Dynamic Braking related functions: b090, b095, b096, – These parameters are for using the internal brake chopper so to get more regeneration torque of the motor.

Cooling Fan Control: b092 – You can select the performance of the cooling fan (if your inverter model includes a fan). This function controls whether the cooling fan stops or keeps on running after the inverter stops the motor. This can result in an additional energy saving and extends fan life.

"B" Function			Run Mode Edit	Defaults	
Func. Code	Name	Description		EU	Units
b082	Starting frequency	Sets the starting frequency for the inverter output, range is 0.01 to 9.99 Hz	×	0.50	Hz
b084	Initialization selection	Select initialized data, five option codes: 00 no (Clears the trip monitor) 01 Trip data (Initializes data) 02 Parameters (Clears the trip monitor and initializes data) 03 Trip+Param (Clears the trip monitor and parameters) 04 Trp+Prm+EzSQ (Clears the trip monitor, parameters and Drive program)	×	00	–
b085	Initialization parameter selection	00 JPN 01 EUR	×	01	–
b087	STOP key selection	Select whether the STOP/RESET key on the keypad is enabled, three option codes: 00 ON (Enabled) 01 OFF (Disabled) 02 Only RESET (Disabled only during stop)	×	00	–
b090	Usage rate of regenerative braking function	Selects the rate of use (in %) of the regenerative braking resistor per 100 sec. intervals, range is 0.0 to 10.0%. 0%: Function disabled	×	0.0	%
b092	Cooling fan control	Selects when the fan is ON during inverter operation, three options: 00 Alws-ON (Always ON) 01 ON in RUN (ON during RUN) 02 ON by temp.	×	01	

"B" Function			Run Mode Edit	Defaults	
Func. Code	Name	Description		EU	Units
b093	Clear elapsed time of cooling fan	Two option codes: 00 OFF 01 CLR	×	00	
b094	Initialization target data	Select initialized parameters, four option codes: 00 ALL 01 Exp.COM, TERM 02 Only U*** 03 All exp.U***	×	00	
b095	Regenerative braking function operation selection	Three option codes: 00 OFF (Disabled) 01 RUN-ON (Enabled (Disabled during stop) 02 Alws-ON (Enabled (Enabled during stop))	×	00	
b096	Regenerative braking function ON level	Range is: 330 to 380 V (200 V class) 660 to 760 V (400 V class)	×	360/720	V
b097	BRD resistor	Ohmic value of the braking resistor connected to the drive 100.0 to 600.0 Ω	×	100.0	Ω
b166	Data Read/Write selection	Controls the Read and Write protection 00 R/W OK (Read/Write Ok) 01 Protected (Read/Write Protected)	×	00	
b180	Initialize trigger (*)	This is to perform initialization by parameter input with b084, b085 and b094. Two option codes: 00 No action 01 Initialize	×	00	

Note When 01 is set on b180, and ↵ key is pressed, initialization starts immediately and there is not any way to restore the previous parameter setting. MX2 doesn't have a method to trigger the initialization by key action as others Omron inverter models have.

Stop Mode/Restart Mode Configuration: b091/b088 – You can configure how the inverter performs a standard stop (each time Run FWD and REV signals turn OFF). Setting b091 determines whether the inverter will control the deceleration, or whether it will perform a free-run stop (coast to a stop). When using the free-run stop selection, it is imperative to also configure how you want the inverter to resume control of motor speed. Setting b088 determines whether the inverter will ensure the motor always resumes at 0 Hz, or whether the motor resumes from its current coasting speed (also called active *frequency matching)*. The run command may turn OFF briefly, allowing the motor to coast to a slower speed from which normal operation can resume.

In most applications a controlled deceleration is desirable, corresponding to b091=00. However, applications such as HVAC fan control will often use a free-run stop (b091=01). This practice decreases dynamic stress on system components, prolonging system life. In this case, you will typically set b088=01 in order to resume from the current speed after a free-run stop (see diagram down below: active frequency matching resume). Note that using the default setting, b088=00, can cause trip events when the inverter attempts to force the load quickly to zero speed.

Note Other events can cause (or be configured to cause) a free-run stop, such as power loss (see *3-6-1 Automatic Restart Mode* on page 121), or an intelligent input terminal [FRS] signal. If all free-run stop behavior is important to your application (such as HVAC), be sure to configure each event accordingly.

An additional parameter further configures all instances of a free-run stop. Parameter B003, Retry Wait Time Before Motor Restart, sets the minimum time the inverter will free-run. For example, if b003=4 seconds (and b091=01) and the cause of the free-run stop lasts 10 seconds, the inverter will free-run (coast) for a total of 14 seconds before driving the motor again.

The figure at below right describes how active frequency matching resume operates. After waiting the time set in b003, the inverter tries to catch the speed of the motor shaft and output speed depends of the setting in b030. At this time, if the motor current rises up to the value set in b028, the inverter decreases the frequency according to the deceleration time set in b029, and finally comes to the required speed. Following are the related parameters for this control.

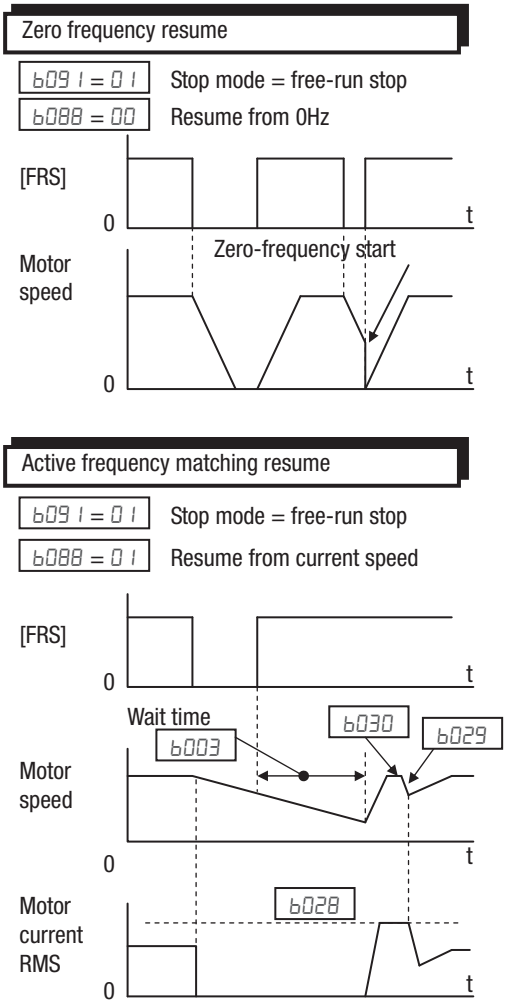

Code	Parameter contents
b028	Active frequency matching restart level
b029	Active frequency matching restart parameter
b030	Start frequency at active frequency matching restart
b088	Free-run stop selection
b091	Stop selection

"B" Function			Run Mode Edit	Defaults	
Func. Code	Name	Description		EU	Units
b088	Free-run stop selection	Selects how the inverter resumes operation when free-run stop (FRS) is cancelled, three options: 00 0 Hz start 01 f-match (Frequency matching start) 02 Actv. f-match (Active Frequency Matching restart)	×	00	–
b091	Stop mode selection	Select how the inverter stops the motor, two option codes: 00 DEC (decelerate to stop) 01 FRS (free-run to stop)	×	00	–

3-6-20 Free-V/F Settings Related

Please refer to chapter 3 for detailed explanation of the function.

"B" Function			Run Mode Edit	Defaults	
Func. Code	Name	Description		EU	Units
b100	Free V/F frequency 1	Set range, 0 ~ value of b102	×	0.	Hz
b101	Free V/F voltage 1	Set range, 0.0 ~ 800.0 V	×	0.0	V
b102	Free V/F frequency 2	Set range, value of b100 ~b104	×	0.	Hz
b103	Free V/F voltage 2	Set range, 0.0 ~ 800.0 V	×	0.0	V
b104	Free V/F frequency 3	Set range, value of b102 ~b106	×	0.	Hz
b105	Free V/F voltage 3	Set range, 0.0 ~ 800.0 V	×	0.0	V
b106	Free V/F frequency 4	Set range, value of b104 ~b108	×	0.	Hz
b107	Free V/F voltage 4	Set range, 0.0 ~ 800.0 V	×	0.0	V
b108	Free V/F frequency 5	Set range, value of b108 ~b110	×	0.	Hz
b109	Free V/F voltage 5	Set range, 0.0 ~ 800.0 V	×	0.0	V
b110	Free V/F frequency 6	Set range, value of b108 ~b112	×	0.	Hz
b111	Free V/F voltage 6	Set range, 0.0 ~ 800.0 V	×	0.0	V
b112	Free V/F frequency 7	Set range, b110 ~ 400	×	0.	Hz
b113	Free V/F voltage 7	Set range, 0.0 ~ 800.0 V	×	0.0	V

3-6-21 Brake Control Function Related

The brake control function allows you to make the inverter control an external brake used for a lift or other machines. To enable this function, specify "01" (enabling the brake control function) for the Brake Control Enable (b120). This function operates as described below.

1. When the inverter receives an operation command, it starts the output and accelerates the motor up to the Brake Release Frequency Setting (b125).
2. After the Brake Release Frequency Setting is reached, the inverter waits for the braking wait time (b121), and then outputs the brake release signal (BOK). However, if the inverter output current has not reached the brake release current (b126), the inverter does not output the brake release signal, but trips and outputs a brake error signal (BER).
3. When the braking confirmation signal (BOK) has been assigned to an intelligent input terminal (that is, when "44" is specified for one of "C001" to "C007"), the inverter waits for the Brake Wait Time for Confirmation (b124) without accelerating the motor after receiving the brake release signal. If the inverter does not receive the braking confirmation signal within the braking confirmation time (b124), it trips with the braking error signal (BER)

output. When the braking confirmation signal (BOK) has not been assigned to any intelligent input terminal, the Brake Wait Time for Confirmation (b 124) is invalid. In such cases, the inverter proceeds to the operation described in item (4) after the output of the brake release signal.

4. After the input of the braking confirmation signal (or the output of the brake release signal [when the BOK signal function is disabled]), the inverter waits for the Brake Wait Time for Acceleration (C6 122), and then starts accelerating the motor up to the set frequency.
5. When the operation command is turned off, the inverter decelerates the motor down to the braking frequency (b 127), and then turns off the brake release signal (BRK).

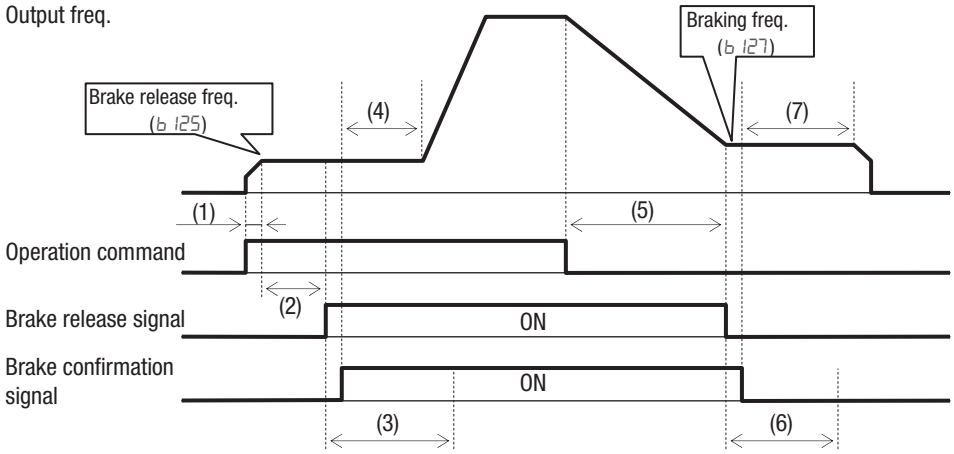

(1) Time to reach Brake release freq.
(2) Brake Wait Time for Release (b 12 1)
(3) Brake Wait Time for Confirmation (b 124)
(4) Brake Wait Time for Acceleration (b 122)
(5) Time to decelerate down to Braking freq
(6) Brake Wait Time for Confirmation (b 124)
(7) Brake Wait Time for Stopping (b 123)

6. When the braking confirmation signal (BOK) has been assigned to an intelligent input terminal (that is, when "44" is specified for one of "C00 1" to "C007"), the inverter waits, after turning off the brake release signal, until the braking confirmation is turned off at least for the Brake Wait Time for Confirmation (b 124) without decelerating the motor. If the braking confirmation signal is not turned off within the Brake Wait Time for Confirmation (b 124), the inverter trips with the braking error signal (BER) output. When the braking confirmation signal (BOK) has not been assigned to any intelligent input terminal, the Brake Wait Time for Confirmation (b 124) is invalid. In such cases, the inverter proceeds to the operation described in item (7) after the brake release signal is turned off.
7. After the braking confirmation signal (or the brake release signal [when the BOK signal function is disabled]) is turned off, the inverter waits for the Brake Wait Time for Stopping (b 123), and then starts decelerating the motor down to 0 Hz.

Note The above timing chart shows the operation on the assumption that the braking confirmation signal "44" (BOK) is assigned to one of the terminal 1 to 7 (C00 1~C007). If the BOK signal is not assigned to any terminal, the Brake Wait Time for Acceleration (b 122) begins when the brake release signal is turned on, and the Brake Wait Time for Stopping (b 123) begins when the brake release signal is turned off.

When using the brake control function, assign the following signal functions to intelligent input and output terminals as needed.

1. To input a signal indicating that the brake is released from the external brake to the inverter, assign the braking confirmation signal (44: BOK) to one of the terminal 1~7 (C001~C007)
2. Assign the brake release signal (19: BRK), which is a brake-releasing command, to one of the output terminal 11~12 (C021~C022). To output a signal when braking is abnormal, assign the brake error signal (20: BER) to an output terminal.

When using the brake control function, you are recommended to select the sensorless vector control (A044=03) that ensures a high torque performance

"B" Function			Run Mode Edit	Defaults	
Func. Code	Name	Description		EU	Units
b120	Brake control selection	Two option codes: 00 OFF (Disabled) 01 ON (Enabled with DC injection) 02 ON (Enabled without DC injection)	×	00	
b121	Brake wait time for release	Set range: 0.00 to 5.00 sec	×	0.00	Sec
b122	Brake wait time for acceleration	Set range: 0.00 to 5.00 sec	×	0.00	Sec
b123	Brake wait time for stopping	Set range: 0.00 to 5.00 sec	×	0.00	Sec
b124	Brake wait time for confirmation	Set range: 0.00 to 5.00 sec	×	0.00	Sec
b125	Brake release frequency	Set range: 0.00 to 400.00 Hz	×	0.00	Hz
b126	Brake release current	0.0 to 3.20 x Rated current	×	Rated current	A
b127	Brake input frequency	Set range: 0.00 to 400.00 Hz	×	0.00	Hz

When position control is used, the brake sequence doesn't follow exactly the parameter set and brake is just applied when the positioning finish.

3-6-22 DC Bus AVR (Automatic Voltage Regulation) for Deceleration Settings

This function is to achieve stable DC bus voltage in case of deceleration. DC bus voltage rises due to regeneration during deceleration. When this function is activated (b130=01 or 02), inverter controls the deceleration time so that the DC bus voltage not to go up to the overvoltage trip level, and leads to the tripless operation during deceleration.

Please note that the actual deceleration time can be longer in this case.

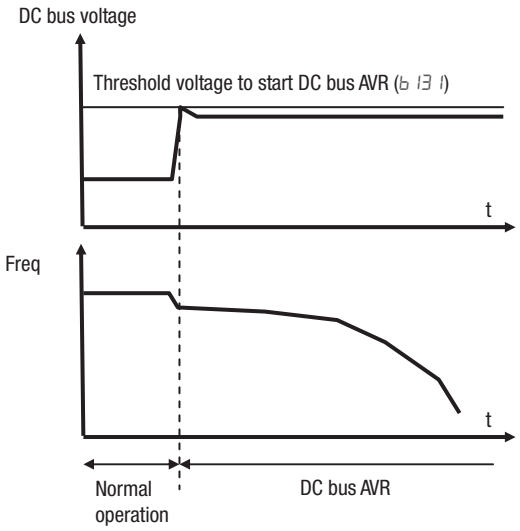

"B" Function			Run Mode Edit	Defaults	
Func. Code	Name	Description		EU	Units
b130	Overvoltage protection function selection during deceleration	00 OFF (Disabled) 01 V-cnst (DC voltage kept constant) 02 Accel (Acceleration enabled)	×	01	–
b131	Overvoltage protection level during deceleration	DC bus voltage of suppression. Range is: 200 V class 330 to 395 400 V class 660 to 790	×	380/ 760	V
b132	Overvoltage protection parameter	Accel. rate when b130=02. Set range: 0.10 ~ 30.00 sec.	×	1.00	sec
b133	Overvoltage protection proportional gain setting	Proportional gain when b130=01. Range is: 0.00 to 5.00	✓	0.20	–
b134	Overvoltage protection integral time setting	Integration time when b130=01. Range is: 0.0 to 150.0	✓	1.0	sec

3-6-23 STO (Safe Torque Off) Setting

Please refer to *Appendix E Safety (ISO 13849-1)* on page 379 for detailed information.

"B" Function			Run Mode Edit	Defaults	
Func. Code	Name	Description		EU	Units
b145	GS input mode	Two option codes: 00 No trip 01 Trip	×	00	

3-6-24 Inverter Mode Setting

Besides Dual rating selection (b049), MX2 supports two different operation modes, standard mode and permanent magnet mode.

The inverter mode cannot be changed just setting b171. After setting b171, be sure to execute initialization to activate new mode.

Actual inverter mode can be monitored with d060.

"B" Function			Run Mode Edit	Defaults	
Func. Code	Name	Description		EU	Units
b171	Inverter mode selection	Two option codes: 00 No function 01 Std. IM 02 Reserved 03 PM	×	00	

Main differences between std. mode and permanent magnet mode are as follows.

Function	Standard mode		Permanent Magnet
Rating	HD	ND	HD
Max. freq. (A004)	400Hz	400Hz	400Hz
Start freq. (b082)	0.10 to 9.99 (Hz)	0.10 to 9.99 (Hz)	0.10 to 9.99 (Hz)
Carrier freq. (b083)	2.0 to 15.0 (kHz)	2.0 to 10.0 (kHz)	2.0 to 15.0 (kHz)
V/f characteristic curve (A044)	00: Const. torque 01: Reduced torque 02: Free V/f 03: SLV	00: Const. torque 01: Reduced torque 02: Free V/f	Not available

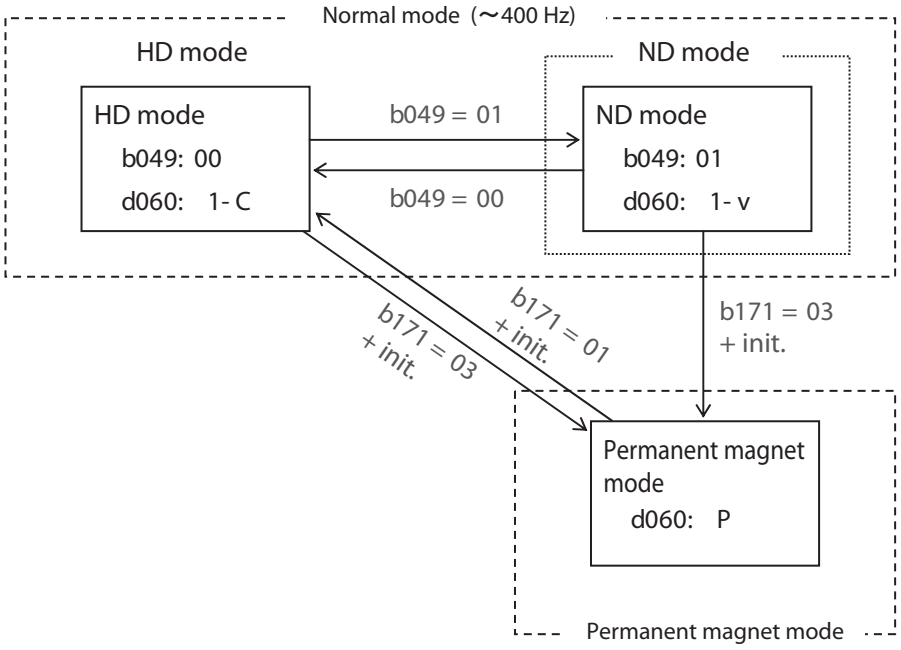

3-6-25 Password Function

The MX2 inverter has password function to prevent from changing parameters or to hide a part of parameters. There are two passwords for b037 (Function Code Display Restriction) and b031 (Software Lock) corresponding to password A and password B.

If password is forgotten, there is no way to delete password. Please be careful to set password.

- **Overview of password function (Example of password A)**

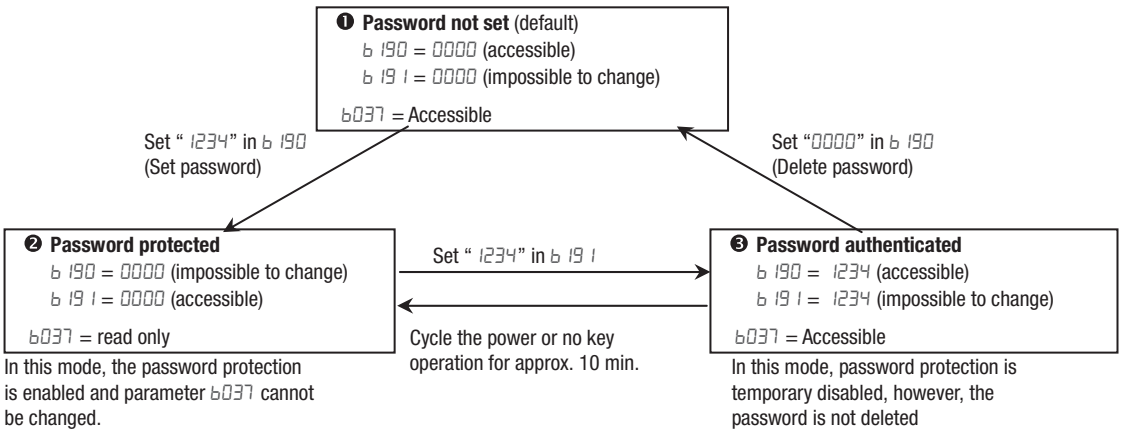

- **Function Code Display Restriction Function and Software Lock Function**

Target of password	Function description	Applied parameters for setting password
Function Code Display Restriction b037 (password A)	Depending on the value in b037, a part of function codes are not displayed. (Displayed parameters can be changed.)	b190, b191
Software Lock b031 (password B)	Depending on the value in b031, all or a part of parameters can not be changed. (All the function codes and data are displayed.)	b192, b193

- **How to Set Password**

1. Set parameter b037 and/or b031 depending on your demand
2. Set password in b190 and/or b192 ("0000" is not available.)

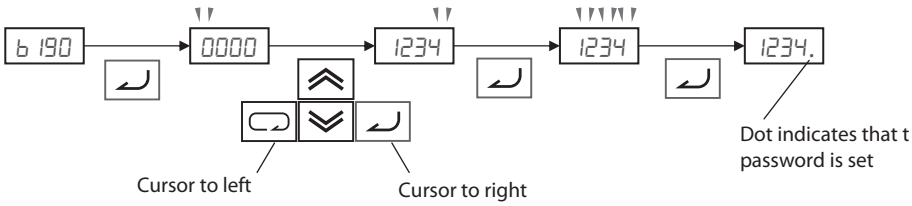

3. Password has been set and locked.
   Parameter b037 and/or b031 cannot be changed.

- **How to authenticate the Password**

For a person who knows the password, unlock protection as follows.

1. Set password in b191 and/or b193
2. If entered password is matched, "Good (Good)" is displayed for 1 second and password protection is unlocked temporary. If cycling the power or no key operation is pressed during 10 minutes the password protection is enabled again automatically. If entered passord doesn't mach, "Err (Error)" is displayed and protection is not unlocked.

• How to change Password

1. Make password authentication as above.
2. Set new password in b190 and/or b192.

• How to delete Password

1. Make password authentication.
2. Set "0000" in b190 and/or b192.
3. Password has been deleted and all the password information is cleared.

3-7 "C" Group: Intelligent Terminal Functions

The seven input terminals [1], [2], [3], [4], [5], [6], and [7] can be configured for any of 72 different functions. The next two tables show how to configure the seven terminals. The inputs are logical, in that they are either OFF or ON. We define these states as OFF=0, and ON=1.

The inverter comes with default options for the seven terminals. These settings are initially unique, each one having its own setting. Note that different selection on parameter b085 may result in different default settings. You can use any option on any terminal, and even use the same option twice to create a logical OR (though usually not required).

Note Terminals [3] and [4] have the ability to be logical inputs, and to be safety inputs in case of safe stop function is selected.

Note Terminal [5] has the ability to be a logical input, and to be an analog input for a thermistor device when PTC function (option code 19) is assigned to that terminal.

3-7-1 Input Terminal Configuration

Functions and Options - The *function codes* in the following table let you assign one of seventy-two options to any of the seven logic inputs for the MX2 inverters. The functions C001 through C007 configure the terminals [1] through [7] respectively. The "value" of these particular parameters is not a scalar value, but it is a discrete number that selects one option from many available *options*.

For example, if you set function C001=00, you have assigned option 00 (Forward Run) to terminal [1]. The option codes and the specifics of how each one works are in Chap. 4.

"C" Function			Run Mode Edit	Defaults	
Func. Code	Name	Description		EU	Units
C001	Multi-function input 1 selection	0 to 91, no	×	00 [FW]	–
C002	Multi-function input 2 selection		×	01 [RV]	–
C003	Multi-function input 3 selection		×	12 [EXT]	–
C004	Multi-function input 4 selection		×	18 [RS]	–
C005	Multi-function input 5 selection		×	02 [CF1]	–
C006	Multi-function input 6 selection		×	03 [CF2]	–
C007	Multi-function input 7 selection		×	06 [JG]	–

The input logic conversion is programmable for each of the seven inputs default to normally open (active high), but you can select normally closed (active low) in order to invert the sense of the logic.

"C" Function			Run Mode Edit	Defaults	
Func. Code	Name	Description		EU	Units
C011	Multi-function input 1 operation selection	Select logic conversion, two option codes: 00... NO 01... NC	×	00	–
C012	Multi-function input 2 operation selection		×	00	–
C013	Multi-function input 3 operation selection		×	00	–
C014	Multi-function input 4 operation selection		×	00	–
C015	Multi-function input 5 operation selection		×	00	–
C016	Multi-function input 6 operation selection		×	00	–
C017	Multi-function input 7 operation selection		×	00	–

Note An input terminal configured for option code 18 ([RS] Reset command) cannot be configured for normally closed operation.

"C" Function			Run Mode Edit	Defaults	
Func. Code	Name	Description		EU	Units
C160	Input terminal response time 1	Sets response time of each input terminal, set range: 0 (x 2 [ms]) to 200 (x 2 [ms]) (0 to 400 [ms])	×	1	–
C161	Input terminal response time 2		×	1	–
C162	Input terminal response time 3		×	1	–
C163	Input terminal response time 4		×	1	–
C164	Input terminal response time 5		×	1	–
C165	Input terminal response time 6		×	1	–
C166	Input terminal response time 7		×	1	–

Note This response time is disregarded when power-on or reset. For example, when the power is up when FW terminal is on, then the operation starts regardless this response time as soon as the internal reset process is completed.

3-7-2 Intelligent Input Terminal Overview

Each of the seven intelligent terminals may be assigned any of the options in the following table. When you program one of the option codes for terminal assignments C001 to C007, the respective terminal assumes the function role of that option code. The terminal functions have a symbol or abbreviation that we use to label a terminal using that function. For example, the "Forward Run" command is [FW]. The physical label on the terminal block connector is simply **1, 2, 3, 4, 5, 6,** or **7**. However, schematic examples in this manual also use the terminal symbol (such as [FW]) to show the assigned option. The option codes for C011 to C017 determines the active state of the logical input (active high or active low).

Input Function Summary Table - This table shows all intelligent input functions at a glance. Detailed description of these functions, related parameters and settings, and example wiring diagrams are in *4-5 Using Intelligent Input Terminals* on page 201.

Input Function Summary Table				
Option Code	**Terminal Symbol**	**Function Name**	**Description**	
00	FW	Forward Run/Stop	ON	Inverter is in Run Mode, motor runs forward
			OFF	Inverter is in Stop Mode, motor stops
01	RV	Reverse Run/Stop	ON	Inverter is in Run Mode, motor runs reverse
			OFF	Inverter is in Stop Mode, motor stops
02	CF1 *1	Multi-step speed setting binary 1	ON	Binary encoded speed select, Bit 0, logical 1
			OFF	Binary encoded speed select, Bit 0, logical 0
03	CF2	Multi-step speed setting binary 2	ON	Binary encoded speed select, Bit 1, logical 1
			OFF	Binary encoded speed select, Bit 1, logical 0
04	CF3	Multi-step speed setting binary 3	ON	Binary encoded speed select, Bit 2, logical 1
			OFF	Binary encoded speed select, Bit 2, logical 0
05	CF4	Multi-step speed setting binary 4	ON	Binary encoded speed select, Bit 3, logical 1
			OFF	Binary encoded speed select, Bit 3, logical 0
06	JG	Jogging	ON	Inverter is in Run Mode, output to motor runs at jog parameter frequency
			OFF	Inverter is in Stop Mode
07	DB	External DC injection braking	ON	DC braking will be applied during deceleration
			OFF	DC braking will not be applied
08	SET	Set (select) 2nd motor Data	ON	The inverter uses 2nd motor parameters for generating frequency output to motor
			OFF	The inverter uses 1st (main) motor parameters for generating frequency output to motor
09	2CH	2-step acceleration/ deceleration	ON	Frequency output uses 2nd-stage acceleration and deceleration values
			OFF	Frequency output uses standard acceleration and deceleration values
11	FRS	Free-run stop	ON	Causes output to turn OFF, allowing motor to free run (coast) to stop
			OFF	Output operates normally, so controlled deceleration stop motor
12	EXT	External trip	ON	When assigned input transitions OFF to ON, inverter latches trip event and displays E 12
			OFF	No trip event for ON to OFF, any recorded trip events remain in history until reset
13	USP	Unattended start protection	ON	On powerup, the inverter will not resume a Run command
			OFF	On powerup, the inverter will resume a Run command that was active before power loss
14	CS	Commercial switch	ON	Motor can be driven by commercial power
			OFF	Motor is driven via the inverter
15	SFT	Soft lock	ON	The keypad and remote programming devices are prevented from changing parameters
			OFF	The parameters may be edited and stored
16	AT	Analog input switching	ON	Refer to *Analog Input Settings* on page 93.
			OFF	
18	RS	Reset	ON	The trip condition is reset, the motor output is turned OFF, and powerup reset is asserted
			OFF	Normal power-ON operation

Input Function Summary Table				
Option Code	**Terminal Symbol**	**Function Name**	**Description**	
19	PTC	PTC thermistor Thermal Protection (C005 only)	ANLG	When a thermistor is connected to terminal [5] and [L], the inverter checks for over-temperature and will cause trip event and turn OFF output to motor
			OPEN	A disconnect of the thermistor causes a trip event, and the inverter turns OFF the motor
20	STA	3-wire start	ON	Starts the motor rotation
			OFF	No change to present motor status
21	STP	3-wire stop	ON	Stops the motor rotation
			OFF	No change to present motor status
22	F/R	3-wire forward/reverse	ON	Selects the direction of motor rotation: ON = FWD. While the motor is rotating, a change of F/R will start a deceleration, followed by a change in direction
			OFF	Selects the direction of motor rotation: OFF = REV. While the motor is rotating, a change of F/R will start a deceleration, followed by a change in direction
23	PID	PID enabled/disabled	ON	Temporarily disables PID loop control. Inverter output turns OFF as long as PID Enable is active (A071=01)
			OFF	Has no effect on PID loop operation, which operates normally if PID Enable is active (A071=01)
24	PIDC	PID integral reset	ON	Resets the PID loop controller. The main consequence is that the integrator sum is forced to zero
			OFF	No effect on PID controller
27	UP	UP/DWN function accelerated	ON	Accelerates (increases output frequency) motor from current frequency
			OFF	Output to motor operates normally
28	DWN	UP/DWN function decelerated	ON	Decelerates (decreases output frequency) motor from current frequency
			OFF	Output to motor operates normally
29	UDC	UP/DWN function data clear	ON	Clears the UP/DWN frequency memory by forcing it to equal the set frequency parameter F001. Setting C101 must be set=00 to enable this function to work
			OFF	UP/DWN frequency memory is not changed
31	OPE	Forced operator	ON	Forces the source of the output frequency setting A001 and the source of the Run command A002 to be from the digital operator
			OFF	Source of output frequency set by A001 and source of Run command set by A002 is used
32	SF1	Multi-step speed setting bit 1	ON	Bit encoded speed select, Bit 1, logical 1
			OFF	Bit encoded speed select, Bit 1, logical 0
33	SF2	Multi-step speed setting bit 2	ON	Bit encoded speed select, Bit 2, logical 1
			OFF	Bit encoded speed select, Bit 2, logical 0
34	SF3	Multi-step speed setting bit 3	ON	Bit encoded speed select, Bit 3, logical 1
			OFF	Bit encoded speed select, Bit 3, logical 0
35	SF4	Multi-step speed setting bit 4	ON	Bit encoded speed select, Bit 4, logical 1
			OFF	Bit encoded speed select, Bit 4, logical 0
36	SF5	Multi-step speed setting bit 5	ON	Bit encoded speed select, Bit 5, logical 1
			OFF	Bit encoded speed select, Bit 5, logical 0
37	SF6	Multi-step speed setting bit 6	ON	Bit encoded speed select, Bit 6, logical 1
			OFF	Bit encoded speed select, Bit 6, logical 0
38	SF7	Multi-step speed setting bit 7	ON	Bit encoded speed select, Bit 7, logical 1
			OFF	Bit encoded speed select, Bit 7, logical 0
39	OLR	Overload limit switching	ON	Perform overload restriction
			OFF	Normal operation

Input Function Summary Table				
Option Code	**Terminal Symbol**	**Function Name**	**Description**	
40	TL	Torque limit enabled	ON	Setting of b040 is enabled
			OFF	Max. torque is limited with 200%
41	TRQ1	Torque limit switching 1	ON	Torque limit related parameters of Powering/regen, and FW/RV modes are selected by the combinations of these inputs.
			OFF	
42	TRQ2	Torque limit switching 2	ON	
			OFF	
44	BOK	Brake confirmation	ON	Brake confirmation signal received
			OFF	Brake confirmation signal not received
46	LAC	LAD cancel	ON	Set ramp times are ignored. Inverter output immediately follows the freq. command.
			OFF	Accel. and/or decel. is according to the set ramp time
47	PCLR	Position deviation clear	ON	Clear the position deviation data
			OFF	Maintain the position deviation data
50	ADD	Frequency addition	ON	Adds the A145 (add frequency) value to the output frequency
			OFF	Does not add the A145 value to the output frequency
51	F-TM	Forced terminal block	ON	Force inverter to use input terminals for output frequency and Run command sources
			OFF	Source of output frequency set by A001 and source of Run command set by A002 is used
52	ATR	Torque command input permission	ON	Torque control command input is enabled
			OFF	Torque control command input is disabled
53	KHC	Integrated power clear	ON	Clear watt-hour data
			OFF	No action
56	MI1	Drive Programming input 1	ON	General purpose input (1) is made ON under Drive Programming
			OFF	General purpose input (1) is made OFF under Drive Programming
57	MI2	Drive Programming input 2	ON	General purpose input (2) is made ON under Drive Programming
			OFF	General purpose input (2) is made OFF under Drive Programming
58	MI3	Drive Programming input 3	ON	General purpose input (3) is made ON under Drive Programming
			OFF	General purpose input (3) is made OFF under Drive Programming
59	MI4	Drive Programming input 4	ON	General purpose input (4) is made ON under Drive Programming
			OFF	General purpose input (4) is made OFF under Drive Programming
60	MI5	Drive Programming input 5	ON	General purpose input (5) is made ON under Drive Programming
			OFF	General purpose input (5) is made OFF under Drive Programming
61	MI6	Drive Programming input 6	ON	General purpose input (6) is made ON under Drive Programming
			OFF	General purpose input (6) is made OFF under Drive Programming
62	MI7	Drive Programming input 7	ON	General purpose input (7) is made ON under Drive Programming
			OFF	General purpose input (7) is made OFF under Drive Programming

Input Function Summary Table				
Option Code	**Terminal Symbol**	**Function Name**	**Description**	
65	AHD	Analog command held	ON	Analog command is held
			OFF	Analog command is not held
66	CP1	Position command selection 1	ON	Multistage position commands are set according to the combination of these switches.
			OFF	
67	CP2	Position command selection 2	ON	
			OFF	
68	CP3	Position command selection 3	ON	
			OFF	
69	ORL	Zero return limit signal	ON	Limit signal of homing is ON
			OFF	Limit signal of homing is OFF
70	ORG	Zero return startup signal	ON	Starts homing operation
			OFF	No action
73	SPD	Speed/position switching	ON	Speed control mode
			OFF	Position control mode
77	GS1 *	GS1 input	ON	EN60204-1 related signals. Signal input of "Safe torque off" function
			OFF	
78	GS2 *	GS2 input	ON	
			OFF	
81	485	Start EzCOM	ON	Starts EzCOM
			OFF	No execution
82	PRG	Drive Programming start	ON	Executing Drive Programming
			OFF	No execution
83	HLD	Retain output frequency	ON	Retain the current output frequency
			OFF	No retention
84	ROK	Permission of Run command	ON	Run command permitted
			OFF	Run command is not permitted
85	EB	Rotation direction detection (C007 only)	ON	Forward rotation
			OFF	Reverse rotation
86	DISP	Display limitation	ON	Only a parameter configured in b038 is shown
			OFF	All the monitors can be shown
90	UIO	Unprotected inverter operation mode	ON	Unprotected inverter operation mode is enabled
			OFF	Unprotected inverter operation mode is disabled
91	PSET	Preset position	ON	P083 value is set to current position
			OFF	-
255	no	No allocation	ON	(input ignored)
			OFF	(input ignored)

3-7-3 Output Terminal Configuration

The inverter provides configuration for logic (discrete) and analog outputs, shown in the table below.

"C" Function			Run Mode Edit	Defaults	
Func. Code	**Name**	**Description**		**EU**	**Units**
C021	Multi-function output terminal 11 selection	48 programmable functions available for logic (discrete) outputs (see next section)	×	00 [RUN]	–
C022	Multi-function output terminal 12 selection		×	01 [FA1]	–
C026	Relay output (AL2, AL1) function selection	48 programmable functions available for logic (discrete) outputs (see next section)	×	05 [AL]	–

"C" Function			Run Mode Edit	Defaults	
Func. Code	**Name**	**Description**		**EU**	**Units**
C027	[EO] terminal selection	13 programmable functions: 00... Output FQ (Output frequency) 01... Output I (Output current) 02... Output TRQ (Output torque) 03... Pulse FQ (Digital output frequency) 04... Output V (Output voltage) 05... Power 06... Thermal (Thermal load rate) 07... LAD-FQ (LAD frequency) 08... Pulse I (Digital current monitor) 10... Heatsink tmp (Fin temperature) 12... YA0 (Drive Programming output) 15... Pulse input 16... Option	×	07 (LAD-FQ)	–
C028	AM selection	11 programmable functions: 00... Output FQ (Output frequency) 01... Output I (Output current) 02... Output TRQ (Output torque) 03... Pulse FQ (Digital output frequency) 04... Output V (Output voltage) 05... Power 06... Thermal (Thermal load rate) 07... LAD-FQ (LAD frequency) 10... Heatsink tmp (Fin temperature) 11... Output TRQ sign (Output torque <signed>) 13... YA1 (Drive Programming) 16... Option	×	00 [Output FQ]	–
C030	Digital current monitor reference value	0.32 x Rated current to 3.20 x Rated current	✓	Rated current	A
C047	Pulse train input scale conversion for EO output	If EO terminal is configured as pulse train input (C027=15), scale conversion is set in C047. Pulse-out = Pulse-in (C047) Set range is 0.01 to 99.99	✓	1.00	–

The output logic conversion is programmable for terminal [11], [12] and the alarm relay terminal. The open-collector output terminal [11] and [12] defaults to normally open (active low), but you can select normally closed (active high) for the terminal in order to invert the sense of the logic. You can invert the logical sense of the alarm relay output as well.

"C" Function			Run Mode Edit	Defaults	
Func. Code	Name	Description		EU	Units
C031	Multi-function output terminal 11 contact selection	Select logic conversion, two option codes: 00... NO 01... NC	×	00	–
C032	Multi-function output terminal 12 contact selection		×	00	–
C036	Relay output (AL2, AL1) contact selection	00... NO contact at AL2, NC contact at AL1 01... NC contact at AL2, NO contact at AL1	×	01	–

You can also adjust the output with ON/OFF delays.

"C" Function			Run Mode Edit	Defaults	
Func. Code	Name	Description		EU	Units
C130	Output 11 ON delay	Set range is 0.0 to 100.0 sec.	×	0.0	Sec.
C131	Output 11 OFF delay		×	0.0	Sec.
C132	Output 12 ON delay	Set range is 0.0 to 100.0 sec.	×	0.0	Sec.
C133	Output 12 OFF delay		×	0.0	Sec.
C140	Relay output ON delay	Set range is 0.0 to 100.0 sec.	×	0.0	Sec.
C141	Relay output OFF delay		×	0.0	Sec.

Note If you are using the output terminal OFF delay feature (any of C145, C149 > 0.0 sec.), the [RS] (reset) terminal affects the ON-to-OFF transition slightly. Normally (with using OFF delays), the [RS] input causes the motor output and the logic outputs to turn OFF together, immediately. However, when any output uses an OFF delay, then after the [RS] input turns ON, that output will remain ON for an additional 1 sec. period (approximate) before turning OFF.

Output Function Summary Table - This table shows all functions for the logical outputs (terminals [11], [12] and [AL]) at a glance. Detailed descriptions of these functions, related parameters and settings, and example wiring diagrams are in *4-6 Using Intelligent Output Terminals* on page 225.

Output Function Summary Table				
Option Code	**Terminal Symbol**	**Function Name**	**Description**	
00	RUN	Signal during RUN	ON	When the inverter is in Run Mode
			OFF	When the inverter is in Stop Mode
01	FA1	Constant speed arrival signal	ON	When output to motor is at the set frequency
			OFF	When output to motor is OFF, or in any acceleration or deceleration ramp
02	FA2	Over set frequency arrival signal	ON	When output to motor is at or above the set freq., even if in accel (C042) or decel (C043) ramps
			OFF	When output to motor is OFF, or at a level below the set frequency
03	OL	Overload warning	ON	When output current is more than the set threshold (C041) for the overload signal
			OFF	When output current is less than the set threshold for the deviation signal
04	OD	Excessive PID deviation	ON	When PID error is more than the set threshold for the deviation signal
			OFF	When PID error is less than the set threshold for the deviation signal
05	AL	Alarm output	ON	When an alarm signal has occurred and has not been cleared
			OFF	When no alarm has occurred since the last cleaning of alarm(s)
06	FA3	Set-frequency-only arrival signal	ON	When output to motor is at the set frequency, during accel (C042) and decel (C043).
			OFF	When output to motor is OFF, or is not at a level of the set frequency
07	OTQ	Overtorque	ON	Estimated motor torque exceeds the specified level
			OFF	Estimated motor torque is lower than the specified level
09	UV	Signal during undervoltage	ON	Inverter is in Undervoltage
			OFF	Inverter is not in Undervoltage
10	TRQ	Torque limit	ON	Torque limit function is executing
			OFF	Torque limit function is not executing
11	RNT	RUN time over	ON	Total running time of the inverter exceeds the specified value
			OFF	Total running time of the inverter does not exceed the specified value
12	ONT	Power ON time over	ON	Total power ON time of the inverter exceeds the specified value
			OFF	Total power ON time of the inverter does not exceed the specified value
13	THM	Thermal warning	ON	Accumulated thermal count exceeds the C061 set value
			OFF	Accumulated thermal count does not exceed the C061 set value
19	BRK	Brake release	ON	Output for brake release
			OFF	No action for brake
20	BER	Brake error	ON	Brake error has occurred
			OFF	Brake performance is normal

Output Function Summary Table				
Option Code	**Terminal Symbol**	**Function Name**	**Description**	
21	ZS	0 Hz signal	ON	Output frequency falls below the threshold specified in C063
			OFF	Output frequency is higher than the threshold specified in C063
22	DSE	Excessive speed deviation	ON	Deviation of speed command and actual speed exceeds the specified value P027.
			OFF	Deviation of speed command and actual speed does not exceed the specified value P027.
23	POK	Position ready	ON	Positioning is completed
			OFF	Positioning is not completed
24	FA4	Set frequency exceeded 2	ON	When output to motor is at or above the set freq., even if in accel (C045) or decel (C046) ramps
			OFF	When output to motor is OFF, or at a level below the set frequency
25	FA5	Set frequency only 2	ON	When output to motor is at the set frequency, during accel (C045) and decel (C046).
			OFF	When output to motor is OFF, or is not at a level of the set frequency
26	OL2	Overload warning 2	ON	When output current is more than the set threshold (C111) for the overload signal
			OFF	When output current is less than the set threshold for the deviation signal
27	ODc	Analog O disconnection detection	ON	When the [O] input value < b070 setting (signal loss detected)
			OFF	When no signal loss is detected
28	OIDc	Analog OI disconnection detection	ON	When the [OI] input value < b071 setting (signal loss detected)
			OFF	When no signal loss is detected
31	FBV	PID FB status output	ON	Transitions to ON when the inverter is in RUN Mode and the PID Process Variable (PV) is less than the Feedback Low Limit (C053)
			OFF	Transitions to OFF when the PID Process Variable (PV) exceeds the PID High Limit (C052), and transitions to OFF when the inverter goes from Run Mode to Stop Mode
32	NDc	Network error	ON	When the communications watchdog timer (period specified by C077) has time out
			OFF	When the communications watchdog timer is satisfied by regular communications activity
33	LOG1	Logic operation output 1	ON	When the Boolean operation specified by C143 has a logical "1" result
			OFF	When the Boolean operation specified by C143 has a logical "0" result
34	LOG2	Logic operation output 2	ON	When the Boolean operation specified by C146 has a logical "1" result
			OFF	When the Boolean operation specified by C146 has a logical "0" result
35	LOG3	Logic operation output 3	ON	When the Boolean operation specified by C149 has a logical "1" result
			OFF	When the Boolean operation specified by C149 has a logical "0" result
39	WAC	Capacitor life warning signal	ON	Lifetime of internal capacitor has expired.
			OFF	Lifetime of internal capacitor has not expired.
40	WAF	Cooling fan life warning signal	ON	Lifetime of cooling fan has expired.
			OFF	Lifetime of cooling fan has not expired.

Output Function Summary Table				
Option Code	**Terminal Symbol**	**Function Name**	**Description**	
41	FR	Starting contact signal	ON	Either FW or RV command is given to the inverter
			OFF	No FW or RV command is given to the inverter, or both are given to the inverter
42	OHF	Fin overheat warning	ON	Temperature of the heat sink exceeds a specified value (C064)
			OFF	Temperature of the heat sink does not exceed a specified value (C064)
43	LOC	Light load detection signal	ON	Motor current is less than the specified value (C039)
			OFF	Motor current is not less than the specified value (C039)
44	MO1	Drive Programming output 1	ON	General output 1 is ON
			OFF	General output 1 is OFF
45	MO2	Drive Programming output 2	ON	General output 2 is ON
			OFF	General output 2 is OFF
46	MO3	Drive Programming output 3	ON	General output 3 is ON
			OFF	General output 3 is OFF
50	IRDY	Operation ready signal	ON	Inverter can receive a run command
			OFF	Inverter cannot receive a run command
51	FWR	Forward run signal	ON	Inverter is driving the motor in forward direction
			OFF	Inverter is not driving the motor in forward direction
52	RVR	Reverse run signal	ON	Inverter is driving the motor in reverse direction
			OFF	Inverter is not driving the motor in reverse direction
53	MJA	Fatal fault signal	ON	Inverter is tripping with major failure
			OFF	Inverter is normal, or is not tripping with major failure
54	WCO	Window comparator O	ON	Analog voltage input value is inside of the window comparator
			OFF	Analog voltage input value is outside of the window comparator
55	WCOI	Window comparator OI	ON	Analog current input value is inside of the window comparator
			OFF	Analog current input value is outside of the window comparator
58	FREF	Frequency command source	ON	Frequency command is given from the operator
			OFF	Frequency command is not given from the operator
59	REF	Run command source	ON	Run command is given from the operator
			OFF	Run command is not given from the operator
60	SETM	2nd motor Selection	ON	2nd motor is being selected
			OFF	2nd motor is not being selected
62	EDM	STO (Safe Torque Off) Performace Monitor (Output terminal 11 only)	ON	STO is being performed
			OFF	STO is not being performed
63	OPO	Option board output	ON	(output terminal for option card)
			OFF	(output terminal for option card)
255	no	Not used	ON	–
			OFF	–

3-7-4 Low Load Detection Parameters

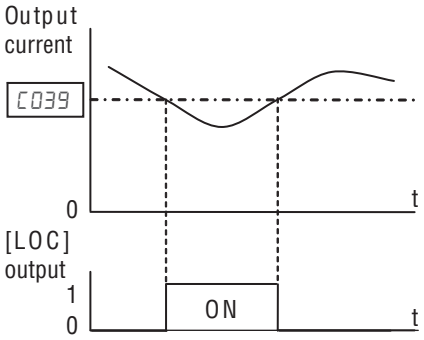

The following parameters work in conjunction with the intelligent output function, when configured. The output mode parameter (C038) sets the mode of the detection at which the low load detection signal [LOC] turns ON. Two kinds of modes can be selected. The detection level parameter (C039) is to set the level of the low load.

This function is for generating an early warning logic output, without causing either a trip event or a restriction of the motor current (those effects are available on other functions).

"C" Function			Run Mode Edit	Defaults	
Func. Code	Name	Description		EU	Units
C038	Light load signal output mode	Two option codes: 00... ACC/DEC/CST (Enabled during acceleration/deceleration/constant speed) 01... Const (Enabled only during constant speed)	×	01	–
C039	Light load detection level	Set the level of low load detection, range is 0.0 to 3.20 x Rated current	×	Rated current	A

3-7-5 Output Function Adjustment Parameters

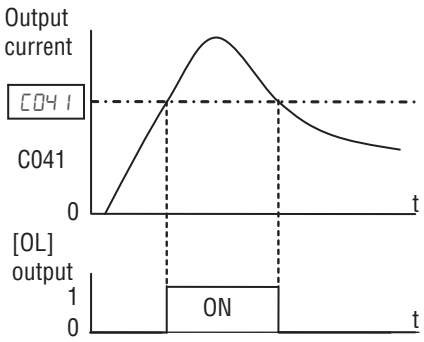

Overload Warning Output - The following parameters work in conjunction with the intelligent output function, when configured. The overload level parameter (C041) sets the motor current level at which the overload signal [OL] turns ON. The range of setting is from 0% to 200% of the rated current for the inverter. This function is for generating an early warning logic output, without causing either a trip event or a restriction of the motor current (those effects are available on other functions).

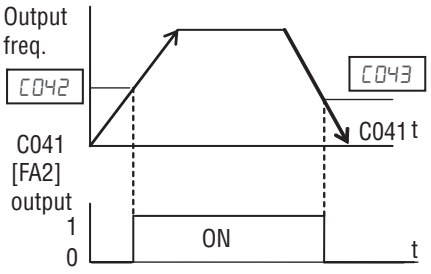

Frequency Arrival Output - The frequency arrival signal, [FA1] or [FA2], is intended to indicate when the inverter output has reached (arrived at) the target frequency. You can adjust the timing of the leading and trailing edges of the signal via two parameters specified to acceleration ad deceleration ramps, C042 and C043. Refer also to *SECTION 4 Operations and Monitoring* on page 191.

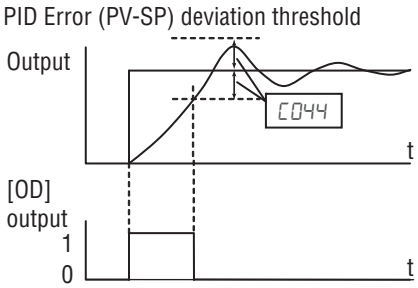

PID FBV Output - The Error for the PID loop is the magnitude (absolute value) of the difference between the Set point (desired value) and Process Variable (actual value). The PID output deviation signal [OD] (output terminal function option code 04) indicates when the error magnitude has exceeded a magnitude you define.

Over/Under-torque Output - The inverter outputs the over/under-torque signal when it detects that the estimated motor output torque exceeds the specified level. To enable this function, assign parameter "07" (OTQ: over/under-torque signal) to an intelligent output terminal. Over-torque or under-torque can be selected by function C054.

This function is effective only when the V/F characteristic curve selection "A044" or "A244" is the sensorless vector control. With any other V/F characteristic curve selected the output of the OTQ signal is unpredictable. When using the inverter for a lift, use the OTQ signal as the trigger to stop braking. Use the frequency arrival signal as the trigger to start braking.

Electronic Thermal Warning Output - Please refer to page 237 for detailed information.

Zero speed detection Output - The inverter outputs the 0 Hz speed detection signal when the inverter output frequency falls below the threshold frequency specified in the zero speed detection level (C063).

To use this function, assign parameter "21" to one of the intelligent output terminals [11] to [12] (C021 to C022), or to the alarm relay output terminal (C026).

This function applies to the inverter output frequency when the V/F characteristic curve selection is based on the constant torque (VC), reduced torque (VP), free-V/F or sensorless vector control.

Heat Sink Overheat Warning Output - The inverter monitors the temperature of its heat sink, and outputs the heat sink overheat warning (OHF) signal when the temperature exceeds the heat sink overheat warning level specified in parameter C064.

"C" Function			Run Mode Edit	Defaults	
Func. Code	**Name**	**Description**		**EU**	**Units**
C040	Overload warning signal output mode	Two option codes: 00... ACC/DEC/CST (Enabled during acceleration/deceleration/constant speed) 01... Const (Enabled only during constant speed)	×	01	–
C041	Overload warning level	0.0: Does not operate 0.1 x Rated current to 3.20 x Rated current	×	Rated current	A
C241	Overload warning level, 2nd motor	0.0: Does not operate 0.1 x Rated current to 3.20 x Rated current	×	Rated current	A
C042	Arrival frequency during acceleration	Sets the frequency arrival setting threshold for the output frequency during acceleration, range is 0.00 to 400.00 Hz	×	0.00	Hz
C043	Arrival frequency during deceleration	Sets the frequency arrival setting threshold for the output frequency during deceleration, range is 0.00 to 400.00 Hz	×	0.00	Hz

"C" Function			Run Mode Edit	Defaults	
Func. Code	**Name**	**Description**		**EU**	**Units**
C044	PID deviation excessive level	Sets the allowable PID loop error magnitude (absolute value), SP-PV, range is 0.0 to 100.0%	×	3.0	%
C045	Arrival frequency during acceleration 2	Set range is 0.00 to 400.00 Hz	×	0.00	Hz
C046	Arrival frequency during deceleration 2	Set range is 0.00 to 400.00 Hz	×	0.00	Hz
C047	Pulse train input scale conversion for EO output	Sets the scale for the pulse input 0.01 to 99.99	✓	1.00	
C052	PID FB upper limit	When the PV exceeds this value, the PID loop turns OFF the PID second stage output, range is 0.0 to 100.0%	×	100.0	%
C053	PID FB lower limit	When the PV goes below this value, the PID loop turns ON the PID second stage output, range is 0.0 to 100.0%	×	0.0	%
C054	Over-torque/under-torque selection	Two option codes: 00... Over-torque 01... Under-torque	×	00	–
C055	Overtorque level (Forward power running)	Set range is 0 to 200%	×	100	%
C056	Overtorque level (Reverse regeneration)	Set range is 0 to 200%	×	100	%
C057	Overtorque level (Reverse power running)	Set range is 0 to 200%	×	100	%
C058	Overtorque level (Forward regeneration)	Set range is 0 to 200%	×	100	%
C059	Signal output mode of Over/ under torque	Two option codes: 00... ACC/DEC/CST (Enabled during acceleration/deceleration/constant speed) 01... Const (Enabled only during constant speed)	×	01	–
C061	Thermal warning level	Set range is 0 to 100% Setting 0 means disabled.	×	90	%
C063	0 Hz detection level	Set range is 0.00 to 100.00 Hz	×	0.00	Hz
C064	Fin overheat warning level	Set range is 0 to 110ºC	×	100	°C
C111	Overload warning level 2	0.0 to 3.20 x Rated current	×	Rated current	A

3-7-6 Network Communications Settings

The following table lists parameters that configure the inverter's serial communications port. The settings affect how the inverter communication with a digital operator (such as 3G3AX-OP05), as well as a ModBus network (for networked inverter applications). The settings cannot be edited via the network, in order to ensure network reliability. Refer to *Appendix B ModBus Network Communications* on page 295 for more information on controlling any monitoring your inverter from a network.

"C" Function			Run Mode Edit	Defaults	
Func. Code	**Name**	**Description**		**EU**	**Units**
C071	Communication speed selection	Eight option codes: 03... 2,400 bps 04... 4,800 bps 05... 9,600 bps 06... 19,200 bps 07... 38,400 bps 08... 57,600 bps 09... 76,800 bps 10... 115,200 bps	×	05	baud
C072	Communication station No. Selection	Set the address of the inverter on the network. Range is 1 to 247	×	1	–
C074	Communication parity selection	Three option codes: 00... No parity 01... Even 02... Odd	×	00	–
C075	Communication stop bit selection	Two option codes: 01... 1-bit 02... 2-bit	×	01	bit
C076	Communication error selection	Selects inverter response to communications error. Five options: 00... Trip 01... Decel-Trip (Trip after deceleration stop) 02... Ignore 03... Free-RUN (Free-run stop) 04... Decel-Stop (Deceleration stop)	×	02	–
C077	Communication error timeout	Sets the communications watchdog timer period. Range is 0.00 to 99.99 sec 0.00 = disabled	×	0.00	sec.
C078	Communication wait time	Time the inverter waits after receiving a message before it transmits. Range is 0 to 1000 ms	×	0	msec.

3-7-7 Analog Input Signal Calibration Settings

The functions in the following table configure the signals for the analog input terminals. Note that these settings do not change the current/voltage or sink/source characteristics - only the zero and span (scaling) of the signals.

These parameters are already adjusted before the shipment, and therefore it is not recommended to do the adjustment at the customer.

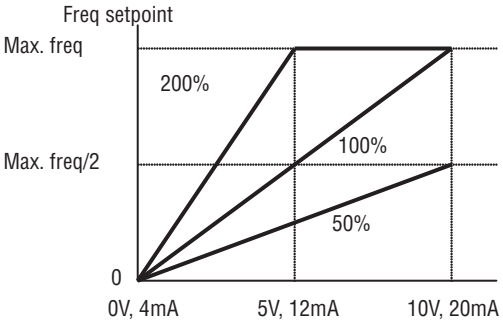

"C" Function			Run Mode Edit	Defaults	
Func. Code	Name	Description		EU	Units
C081	O adjustment	Scale factor between the external frequency command on terminals L-O (voltage input) and the frequency output, range is 0.0 to 200.0%	✓	100.0	%
C082	OI adjustment	Scale factor between the external frequency command on terminals L-OI (current input) and the frequency output, range is 0.0 to 200.0%	✓	100.0	%
C085	Thermistor adjustment	Scale factor of PTC input. Range is 0.0 to 200.0%	✓	100.0	%

Note When you restore factory default settings, the values will change to those listed above. Be sure to manually reconfigure the values for your application, if needed, after restoring factory defaults.

3-7-8 Miscellaneous Functions

The following table contains miscellaneous functions not in other function groups.

"C" Function			Run Mode Edit	Defaults	
Func. Code	Name	Description		EU	Units
C091	Debug mode selection *	Use "00". Do not change.	×	00	–
C101	UP/DWN selection	Controls speed setpoint for the inverter after power cycle. Two option codes: 00... Not save (Do not store the frequency data) 01... Save (Store the frequency data)	×	00	–
C102	Reset selection	Determines response to Reset input [RS]. Four option codes: 00... ON-RESET (Trip reset at power-on) 01... OFF-RESET (Trip reset when the power is OFF) 02... ON in Trip (Enabled only during trip (Reset when the power is ON)) 03... Trip RESET (Trip reset only)	✓	00	–

"C" Function			Run Mode Edit	Defaults	
Func. Code	Name	Description		EU	Units
C 103	Reset frequency matching selection	Determines the restart mode after reset is given, three option codes: 00... 0 Hz start 01... f-match (Frequency matching start) 02... Actv.f-match (Active Frequency Matching restart)	×	00	–
C 104	UP/DWN clear mode	Freq. set value when UDC signal is given to the input terminal, two option codes: 00... 0 Hz 01... Pow-ON data	×	00	–

*1 Not only for Up/Down function, it also save the content of F001 when the reference is give by digital operator.

⚠ **Caution** Do not change the debug mode for safety reasons. Otherwise unexpected performances may occur.

3-7-9 Analog Output Calibration Related Functions

These functions are for adjustment of analog output FM and AM. The outputs are adjusted at factory before the shipment, and therefore basically no need to adjust at the customer. But in case you need to change the gain depending on your system (i.e. analog meter specification), you can use these functions for the adjustment.

"C" Function			Run Mode Edit	Defaults	
Func. Code	Name	Description		EU	Units
C 105	EO gain setting	Set range is 50 to 200%	✓	100	%
C 106	AM gain setting	Set range is 50 to 200%	✓	100	%
C 109	AM bias setting	Set range is 0 to 100%	✓	0	%

3-7-10 Output Logic and Timing

Logic Output Function - The inverter has a built-in logic output feature. Select any two operands out of all intelligent output options and their operator out of AND, OR, or XOR (exclusive OR). The terminal symbol for the new output is [LOG]. Use C021, C022 or C026 to route the logical result to terminal [11], [12] or the relay terminals. LOG1-LOG3, no, OPO cannot be the operand.

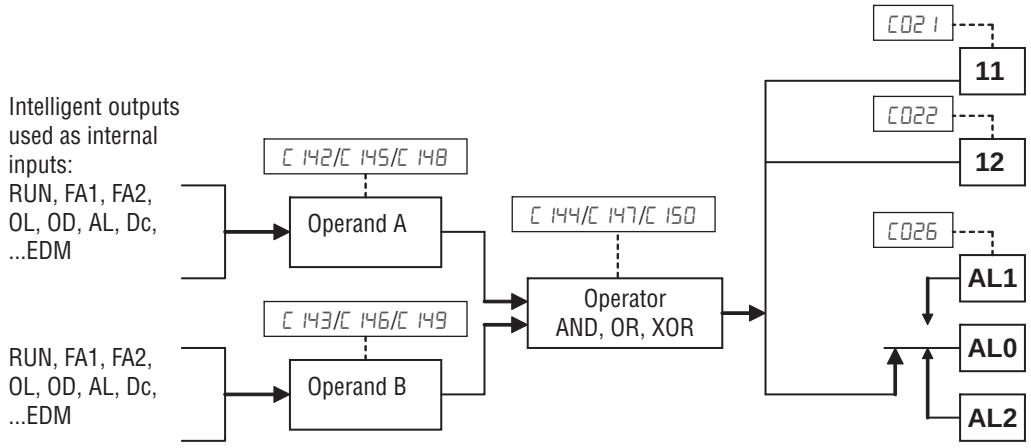

The following table shows all four possible input combinations with each of the three available logic operations.

Operand		Operator		
A	**B**	**AND**	**OR**	**XOR**
0	0	0	0	0
0	1	0	1	1
1	0	0	1	1
1	1	1	1	0

"C" Function			Run Mode Edit	Defaults	
Func. Code	**Name**	**Description**		**EU**	**Units**
C142	Logic output signal 1 selection 1	All the programmable functions available for logic (discrete) outputs except LOG1 to LOG3, OPO, no	×	00	–
C143	Logic output signal 1 selection 2		×	00	–
C144	Logic output signal 1 operator selection	Applies a logic function to calculate [LOG] output state, Three options: 00... AND 01... OR 02... XOR	×	00	–
C145	Logic output signal 2 selection 1	All the programmable functions available for logic (discrete) outputs except LOG1 to LOG3, OPO, no	×	00	–
C146	Logic output signal 2 selection 2		×	00	–
C147	Logic output signal 2 operator selection	Applies a logic function to calculate [LOG] output state, Three options: 00... AND 01... OR 02... XOR	×	00	–

"C" Function			Run Mode Edit	Defaults	
Func. Code	**Name**	**Description**		**EU**	**Units**
C 148	Logic output signal 3 selection 1	All the programmable functions available for logic (discrete) outputs except LOG1 to LOG3, OPO, no	×	00	–
C 149	Logic output signal 3 selection 2		×	00	–
C 150	Logic output signal 3 operator selection	Applies a logic function to calculate [LOG] output state, Three options: 00... AND 01... OR 02... XOR	×	00	–

3-7-11 Other Functions

"C" Function			Run Mode Edit	Defaults	
Func. Code	**Name**	**Description**		**EU**	**Units**
C 169	Multi-step speed/position determination time	Set range is 0 to 200 (x 10ms)	×	0	ms

To avoid the miss-input of the multi-speed due to the time rug, waiting time to fix the multi-speed can be set by C 169. When input is detected, data is fixed after the time defined with C 169.

3-8 "H" Group: Motor Constants Functions

The "H" Group parameters configure the inverter for the motor characteristics. You must manually set H003 and H004 values to match the motor. Parameter H006 is factory-set. If you want to reset the parameters to the factory default settings, use the procedure in *6-3 Restoring Factory Default Settings* on page 279. Use A044 to select the torque control algorithm as shown in the diagram.

Please refer to *3-8-3 Auto-tuning Function* on page 175 for detailed explanation of the auto-tuning.

"H" Function			Run Mode Edit	Defaults	
Func. Code	Name	Description		EU	Units
H001	Auto-tuning selection	Option codes: 00... OFF (Disabled) 01... ON (STOP) 02... ON (Rotation)	×	00	–
H002	Motor parameter selection	Option codes: 00... Standard motor parameter 02... Auto tuning parameter	×	00	–
H202	2nd motor parameter selection		×	00	–
H003	Motor capacity selection	Selections: 0.1/0.2/0.4/0.75/1.5/2.2/3.7/5.5/7.5/11/15/18.5	×	Specified by the capacity of each inverter model	kW
H203	2nd motor capacity selection		×		kW
H004	Motor pole number selection	Selections: 2/4/6/8/10/12/14/16/18/20/22/24/26/28/30/32/34/36/38/40/42/44/46/48	×	4	poles
H204	2nd motor pole number selection		×	4	poles
H005	Speed response	Set range is 1 to 1000	✓	100	%
H205	2nd speed response		✓	100	%
H006	Stabilization parameter	Motor constant (factory set), range is 0 to 255	✓	100	–
H206	2nd stabilization parameter		✓	100	–
H020	Motor parameter R1	0.001~65.535 ohms	×	Depends on the motor capacity	Ohm
H220	2nd motor parameter R1		×		Ohm
H021	Motor parameter R2	0.001~65.535 ohms	×	Depends on the motor capacity	Ohm
H221	2nd motor parameter R2		×		v
H022	Motor parameter L	0.01~655.35 mH	×	Depends on the motor capacity	mH
H222	2nd motor parameter L		×		mH
H023	Motor parameter Io	0.01~655.35 A	×	Depends on the motor capacity	A
H223	2nd motor parameter Io		×		A
H024	Motor parameter J	0.001~9999.000 kgm²	×	Depends on the motor capacity	kgm²
H224	2nd motor parameter J		×		kgm²
H030	Motor parameter R1 (auto-tuning data)	0.001~65.535 ohms	×	Depends on the motor capacity	Ohm
H230	2nd motor parameter R1 (auto-tuning data)		×		Ohm
H031	Motor parameter R2 (auto-tuning data)	0.001~65.535 ohms	×	Depends on the motor capacity	Ohm
H231	2nd motor parameter R2 (auto-tuning data)		×		Ohm
H032	Motor parameter L (auto-tuning data)	0.01~655.35mH	×	Depends on the motor capacity	mH
H232	2nd motor parameter L (auto-tuning data)		×		mH

"H" Function			Run Mode Edit	Defaults	
Func. Code	**Name**	**Description**		**EU**	**Units**
H033	Motor parameter Io (auto-tuning data)	0.01~655.35A	×	Depends on the motor capacity	A
H233	2nd motor parameter Io (auto-tuning data)		×		A
H034	Motor parameter J (auto-tuning data)	0.001~9999.000 kgm^2	×	Depends on the motor capacity	kgm²
H234	2nd motor parameter J (auto-tuning data)		×		kgm²
H050	Slip compensation P gain for V/f control with FB	0.00~10.00	✓	0.2	-
H051	Slip compensation I gain for V/f control with FB	0~1000	✓	2	-

3-8-1 Motor Constants Selection

Adjust the motor constant settings to the motor to be driven by the inverter.

When using a single inverter to drive multiple motors in the control mode based on VC, VP, or free V/F characteristics, calculate the total capacity of the motors, and specify a value close to the total capacity for the motor capacity selection (H003/H203).

When the automatic torque boost function is used, the motor constant settings that do not match with the motor may result in a reduced motor torque, or unstable motor operation.

You can select the motor constants that are used when the control mode is the sensorless vector control (hereafter "SLV") from the following three types.

1. Motor constants of standard induction motor
   When H002/H202=00, motor constants in H020/H220 to H024/H224 are taken. The initial values in H020/H220 to H024/H224 are standard motor's values.
2. Motor constants obtained by off-line auto-tuning
   When H002/H202=02, motor constants in H030/H230 to H034/H234 are taken, which are obtained by off-line auto-tuning.
3. Arbitrarily set motor constants
   In above (1) and (2) cases, motor constants can be adjusted manually. According to value of H002/H202, change motor constants in H020/H220 to H024/H224 or H030/H230 to H034/H234 if necessary.

*1) Convert the inertia (J) to the motor shaft value. Bigger J value will result in a quicker in motor response and quicker in torque increase. Smaller J value will result in the opposite way.

*2) In the SLV modes, inverter may give out reverse to given operation command in the low speed range as a nature of those controls. In case there is a specific inconvenience for example reverse rotation damages the machine, enable the reverse run protection (b046).

3-8-2 Sensorless Vector Control

This sensorless vector control enables the inverter to accurately operate the motor with a high starting torque, even at low speed. It estimates and controls the motor speed and output torque based on the inverter output voltage, output current, and the set motor constants on the inverter. To use this function, specify "03" for the V/F characteristic curve selection (A044/A244).

In prior to use this function, be sure to make optimum setting of the motor constants, which is described before.

When using this function, observe the following precautions:

1. If you use the inverter to drive a motor of which the capacity is two class lower than the maximum applicable capacity of the inverter, you may not be able to obtain adequate motor characteristics.
2. If you cannot obtain the desired characteristics from the motor driven under the SLV control, readjust the motor constants according to the symptom, as described in the table below.

Status	Symptom	Adjustment method	Adjustment item
Powering	Momentary speed variation is negative	Increase the motor constant R2 step by step from the set value up to 1.2 times of the set value	H021/H221
	Momentary speed variation is positive	Decrease the motor constant R2 step by step from the set value up to 0.8 times of the set value	H021/H221
Regeneration	Torque is insufficient at low speed (~ few Hz)	Increase the motor constant R1 step by step from the set value up to 1.2 times of the set value	H020/H220
		Increase the motor constant Io step by step from the set value up to 1.2 times of the set value	H023/H223
Starting	Motor generates an impact at start	Reduce the motor constant J from the set value	H024/H224
		Decrease the speed response factor	H005/H205
	Motor runs backward for short moment at start	Set 01 (enable) on reverse run protection function (b046)	b046
Decelerating	Motor runs unsteadily	Decrease the speed response factor	H005/H205
		Decrease the motor constant J from the set value	H024/H224
Low frequency operation	Motor rotation is unstable	Increase the speed response factor	H024/H224
		Increase the motor constant J from the set value	H005/H205

Note Note 1) When driving a motor of which the capacity is one class lower than the inverter, adjust the torque limit (b041 to b044) so that the value "α" calculated by the expression below does not exceed 200%. Otherwise, the motor may not be burnt.

α = "torque limit" x (inverter capacity) / (motor capacity)

(Example) When the inverter capacity is 0.75 kW and the motor capacity is 0.4 kW, the torque limit value is calculated as follows, based on the assumption that the value should be 200%:

Torque limit (b041 to b044) = α x (motor capacity) / (inverter capacity)
= 2.0 x (0.4kW)/(0.75kW) = 106%

3-8-3 Auto-tuning Function

The MX2 inverter has auto-tuning function to get suitable motor control performance by measuring the motor constants automatically. Auto-tuning is effective only for sensorless vector control.

Auto-tuning with motor stop (H001=01)

Motor does not rotate while auto-tuning. If rotating motor could give harm to your application, use this mode. But the motor constant I0 (no-load current) and J (inertia) are not measured and remain unchanged. (I0 can be monitored in 50Hz of V/f operation.)

Auto-tuning with motor rotation (H001=02)

Motor rotates according to a special operation pattern while auto-tuning. However, the torque during auto-tuning is not sufficient, which may cause a problem in the load (for example, a lift may slide down). See below instruction 8.-d).

When using auto-tuning function, follow the instructions below.

1. When using a motor which constants are unknown, execute offline auto-tuning to obtain the constants.
2. When the motor constant selection (H002/H202) is standard motor (01), the initial values in H020/H220 to H024/H224 are standard motor's values.
3. The motor constant data is corresponding to one-phase of Y (star) connection for 50 Hz.
4. Set base frequency (A003) and AVR voltage (A082) according to the motor specifications. If the motor voltage is other than the alternatives, set V/f gain (A045) according to below formula.
   "motor voltage (A082)"x"output voltage gain (A045)"="motor rated voltage"
5. Proper motor constants are obtained only when the same size or one size lower motor is used. If other size of motor is connected, proper values may not be obtained or auto-tuning operation may not be completed. In this case, press STOP/RESET key, then error code will be displayed.
6. Be sure to disable DC braking setting (A051=00) and simple positioning selection (P012=00), otherwise motor constants are not measured properly.
7. Be sure to deactivate ATR terminal (52: Enable torque cmd. input), otherwise motor constants are not measured properly.
8. If auto-tuning with motor rotation (H001=02) is used, check the followings points.
   a) The motor rotates up to 80% of base frequency. Check if it is no problem for the application.
   b) The motor should not be driven by any other external force.
   c) All the brakes should be released.
   d) During auto-tuning, insufficient torque may cause a problem in the load (for example, a lift may slide down). In this case, remove the motor from the machine or other load, and perform auto-tuning with the motor alone. The measured inertia J is based on the motor alone. To apply the data, add the moment of inertia of the load machine to the measured J data after converting the moment of inertia to the motor shaft data.
   e) If the application is with limitation (e.g. lift or boring machine), the allowable rotation limit may be exceeded in auto-tuning, and the machine may be damaged.
9. Even when "01 (auto-tuning without motor rotation)" is selected, the motor could rotate slightly during auto-tuning.

10. When performing the auto-tuning with one lower size of motor, enable the overload restriction function, and set the overload restriction level to 150% of the rated current of the motor.
11. When deceleration over-voltage suppress integral time (b134) is small, auto-tuning may result in over-voltage trip. In this case, increase b134 and retry the auto-tuning.
12. To execute auto-tuning, be sure to set the output frequency (F001) larger than starting frequency (b082) regardless with or without rotation.

Off-line auto-tuning procedure (with motor rotation)

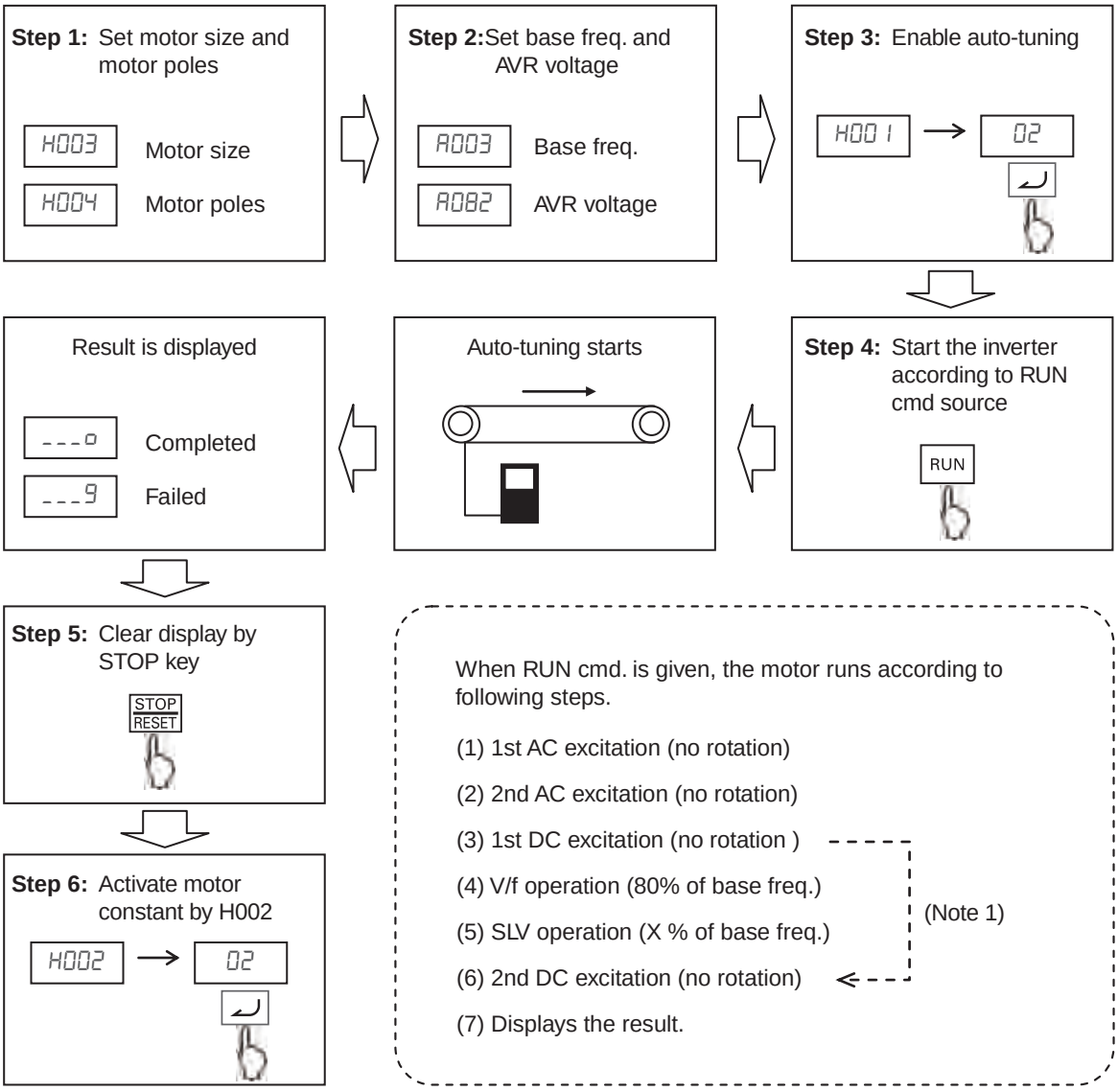

Note 1 When no-rotation setting (H001=01), (4) and (5) are skipped.

Note 2 After auto-tuning is completed, be sure to set 02 in H002/H202, otherwise measured data is not effective.

Note 3 Speed "X" of above (5) depends on accel/deceleration time.
(T: Larger time of accel or deceleration time)
0 < T < 50 [s] : X=40%
50 ≤ T < 100 [s] : X=20%
100 ≤ T [s] : X=10%

Note 4 If auto-tuning is failed, try to execute again.

Note 5 If the inverter trips during the auto-tuning, the auto-tuning is interrupted. After removing the cause of trip, retry auto-tuning from the beginning.

Note 6 If inverter is stopped during auto-tuning by stop command (by STOP key or deactivate RUN input), measured constants could remain. Be sure to execute auto-tuning again.

Note 7 If auto-tuning is attempted in free V/f setting, auto-tuning will fail with error display.

3-8-4 Permanent Magnet motor

When PM mode is selected on b17 1=03 and after initialization b180=01 new motor parameters appears on the "H" group replacing most of the standard IM parameters that dissapears. Next table shows this new parameters that should be used to adjust the motor characteristics:

"H" Function			Run Mode Edit	Defaults	
Func. Code	Name	Description		EU	Units
H102	PM motor code selection	00 Standard motor parameter 02 Auto-tuning parameter	×	00	–
H103	PM motor capacity	0.1 to 18.5	×	According to inverter rating	–
H104	PM motor pole number selection	2/4/6/8/10/12/14/16/18/20/22/24/ 26/28/30/32/34/36/38/40/42/44/ 46/48 poles	×		–
H105	PM rated current	0.00 x Rated current to 1.60 x Rated current	×		A
H106	PM parameter R	0.001 to 65.535 Ω	×		Ω
H107	PM parameter Ld	0.01 to 655.35 mH	×		mH
H108	PM parameter Lq	0.01 to 655.35 mH	×		mH
H109	PM parameter Ke	0.0001 to 6.5535 Vp/(rad/s)	×		Vp/ (rad/s)
H110	PM parameter J	0.001 to 9999.000 Kg/m²	×		Kg/m²
H111	PM parameter R (auto-tuning data)	0.001 to 65.535 Ω	×		Ω
H112	PM parameter Ld (auto-tuning data)	0.01 to 655.35 mH	×		mH
H113	PM parameter Lq (auto-tuning data)	0.01 to 655.35 mH	×		mH
H116	PM speed response	1 to 1000	✓	100	%
H117	PM starting current	20.00 to 100.00%	✓	70.00	%
H118	PM starting time	0.01 to 60.00 s	✓	1.00	s
H119	PM stabilization parameter	0 to 120%	✓	100	%
H121	PM minimum frequency	0.0 to 25.5%	✓	8.0	%
H122	PM No-Load current	0.00 to 100.00%	✓	10.00	%
H123	PM starting method	00 Normal 01 IMPE	×	00	–
H131	PM IMPE 0V wait	0 to 255	×	10	–
H132	PM IMPE detect wait	0 to 255	×	10	–
H133	PM IMPE detect	0 to 255	×	30	–
H134	PM IMPE voltage gain	0 to 200	×	100	–

Some parameters default setting also change when PM motor is selected. This table shows this parameters and the new default setting:

Func. Code	Name	New default setting
b027	Overcurrent suppression function	00 (OFF)
b083	Carrier frequency	10 KHz
b089	Automatic carrier reduction	00 (OFF)

Permanent Magnet motor limitations.

When using a Permanent Magnet motor some limitations should be considered regarding application and functionallity point of view.

From application point of view take this limitations in consideration:

1. Use always on reduced torque applications with a starting torque less than 50%.
2. MX2 in PM mode is not suitable for use in constant torque application where rapid acceleration/deceleration and low speed operation is need. Never use for transportation machine and specially for vertical loads such elevators.
3. Drive is able to control up to 50 times the motor moment of Inertia.
4. Two or more motors could not be driven with one inverter
5. Be careful not exceed the demagnetization current of the motor

From functionality point of view several functions and parameters are not available when PM mode is selected, next table show which ones.

Function	Related Parameters	PM mode
2nd control	Intelligent input terminalSET08	Non-display
	Intelligent output terminalSETM60	Non-display
Torque monitor limit control	C027, C028	Choices restriction
	d009, d010, d012, b040, b045, C054, C059, P033, P034, P036, P041	Non-display
	Intelligent input terminal TL(40), TRQ1(41), TRQ2(42), ATR(52)	Non-display
	Intelligent output terminal OTQ(07), TRQ(10)	Non-display
Encoder feedback	P003	Choices restriction
	d008, d029, d030, H050, H051, P004, P011, P012, P015, P026, P027, P060, P073, P075, P077	Non-display
	Intelligent input terminal PCLR(47), CP1(66), CP3(68), ORL(69), ORG(70), SPD(73), EB(85)	Non-display
	Intelligent outpu terminal DES(22), POK(23)	Non-display
Jog	A038, A039	Non-display
	Intelligent input terminal JG(06)	Non-display
IM control	A041, A044, A046, A047, b100, b113, H002, H006, H020, H024, H030, H034	Non-display
V/f gain	A045	Non-display
AVR	A081, A083, A084	Non-display
Automatic energy-saving drive	A085, A086	Non-display
Restarting with active matching frequency	b001, b008, b088, C103	Choices restriction
	b028, b030	Non-display
Overcurrent suppression	b027	Non-display
Reduced voltage start	b036	Non-display
Reverse run protection	b046	Non-display
Brake control	b120, b127	Non-display
	Intelligent input terminal BOK(44)	Non-display
	Intelligent output terminal BRK(19), BER(20)	Non-display
Offline auto-tuning	H001	Choices restriction
Dual Rating	b049	Non-display
Commercial power source switching	Intelligent input terminal CS14	Non-display
LAD cancellation	Intelligent output terminal LAC46	Non-display

3-9 "P" Group: Other Parameters

P group parameters are for other functionality such as option error, encoder (pulse train input) settings, torque command, positioning command, Drive Programming and communication (CompoNet, DeviceNet, EtherCAT, Profi-Bus, CAN Open) related.

3-9-1 Option Card Error

You can select how the inverter reacts when an error results from a built-in option card.

"P" Function			Run Mode Edit	Defaults	
Func. Code	Name	Description		EU	Units
P001	Operation selection at option 1 error	Two option codes: 00… Trip 01… Continues operation	×	00	–

3-9-2 Encoder (Pulse Train Input) Related Settings

You can achieve speed control or simple positioning control by using pulse train input. Following table shows the related parameters of those function. Please refer to *SECTION 4 Operations and Monitoring* on page 191 for the detailed description.

"P" Function			Run Mode Edit	Defaults	
Func. Code	Name	Description		EU	Units
P003	EA terminal selection	Three option codes: 00… FQ set 01… Encoder FB 02… EzSQ	×	00	–
P004	Pulse train input mode for feedback	Four option codes: 00…Single-ph. 01…2-ph.1 02…2-ph.2 03…Single+Dir	×	00	–
P011	Encoder pulses	Sets the pulse number (ppr) of the encoder, set range is 32~1024 pulses	×	512	–
P012	Simple positioning selection	Two option codes: 00…OFF 02…ON	×	00	–
P014	Creep pulse ratio	0.0 to 400.0	×	125.0	%
P015	Creep speed	Set range is start frequency (b082) ~10.00 Hz	×	5.00	Hz
P026	Overspeed error detection level	Set range is 0.0~150.0%	×	115.0	%
P027	Speed deviation error detection level	Set range is 0.00~120.00 Hz	×	10.00	Hz

3-9-3 Speed control Related Settings

Set "15" in C027 and "00" in P003, then output frequency is controlled by single phase pulse train input to EA terminal.

"P" Function			Run Mode Edit	Defaults	
Func. Code	Name	Description		EU	Units
P055	Pulse train frequency scale	Sets the pulse numbers at max. frequency, set range is 1.0~32.0 kHz	×	1.5	kHz
P056	Pulse train frequency filter time constant	Set range is 0.01~2.00 sec.	×	0.10	sec
P057	Pulse train frequency bias amount	Set range is -100~100 %	×	0	%
P058	Pulse train frequency limit	Set range is 0~100 %	×	100	%
P059	Pulse input lower cut	0.01 to 20.00	×	1.00	%

The P059 parameter works as a cut frequency for the pulse input so all the frequencies below it will be considered as zero. The percentage value is based on the maximum frequency on the input setting in P055.

3-9-4 Torque Command Related Settings

Torque control in open loop could be achieve with following parameters. 100% torque is referred to inverter rated current. Absolute torque value is up the motor to be combined.

"P" Function			Run Mode Edit	Defaults	
Func. Code	Name	Description		EU	Units
P033	Torque reference input selection	Six option codes: 00… O (Terminal O) 01… OI (Terminal OI) 03… OPE (Digital Operator) 06… Option	×	00	-
P034	Torque reference setting	Set range is 0~200%	✓	0	%
P036	Torque bias mode	Three option codes: 00… OFF (None) 01… OPE (Digital Operator) 05… Option 1	×	00	-
P037	Torque bias value	Range is -200~200%	✓	0	%
P038	Torque bias polarity selection	Two option codes: 00… Sign (Signed) 01… Direction (Depends on the RUN direction)	×	00	-
P039	Speed limit value in torque control (forward)	Set range is 0.00~120.00Hz	✓	0.00	Hz
P040	Speed limit value in torque control (reverse)	Set range is 0.00~120.00Hz	✓	0.00	Hz
P041	Speed/torque control switching time	Set range is 0 to 1000 ms	×	0	ms

To enable the torque control is necessary to assign the "ATR" (Enable torque command input) to one of the multi-function inputs (that is, when "52" is specified for one of "C001" to "C007").

3-9-5 Simple Positioning

You can achieve simple positioning by simple encoder feedback control. Following pages shows the related parameters to be set for the positioning.

Encoder wiring - The hardware overview about pulse train input is shown below.

Pulse input types	Max. Freq.	EA terminal (5 to 24 VDC)	EB terminal (24 VDC)
90 ph. difference 2-ph. pulse	32 kHz Phase A 2 kHz Phase B	Phase-A (PNP open collector or Voltage output type)	Phase-B (PNP open collector or Voltage output type)
Single phase pulse + direction	32 kHz	Single phase pulse (PNP open collector or Voltage output type)	Direction (sink/source transistor or contactor)
Single phase pulse	32 kHz	Single phase pulse (PNP open collector or Voltage output type)	–

2-phase pulse input

Wire phase-A to EA terminal and phase-B to EB terminal. Since common terminal of EB is same as other inputs, use all the input terminals as source logic (PNP open collector or voltage output type). Voltage of EB should be 18 to 24 VDC. Assign EB in input terminal 7.

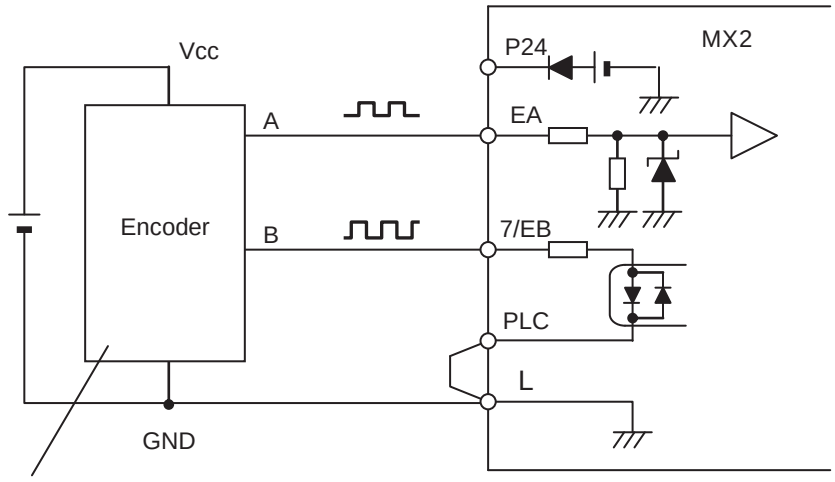

PNP open collector type or
voltage output type encoder

Single phase pulse input

Wire phase-A to EA terminal and direction signal to EB terminal. Both sink or source logic are available for EB terminal by changing position of the short bar. Assign EB in input terminal 7. ON input is forward and OFF input is reverse direction.

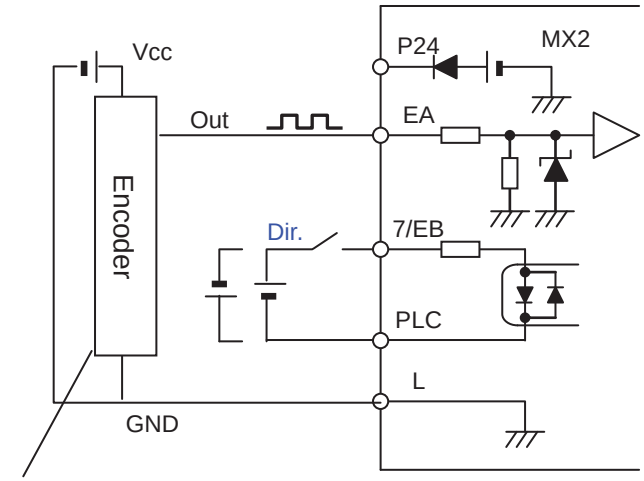

PNP open collector type or
voltage output type encoder

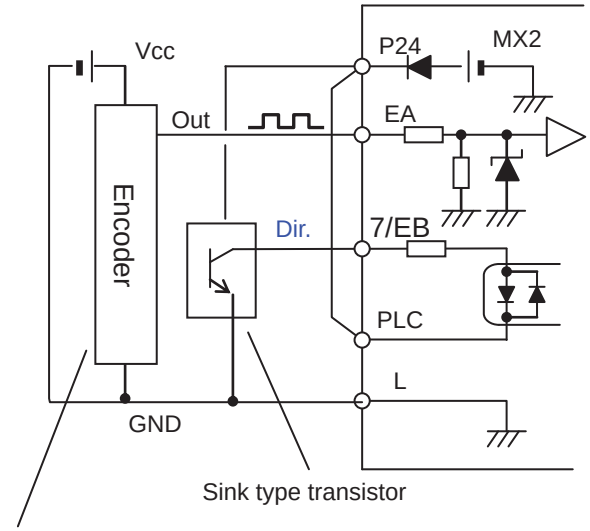

Sink type transistor

PNP open collector type or
voltage output type encoder

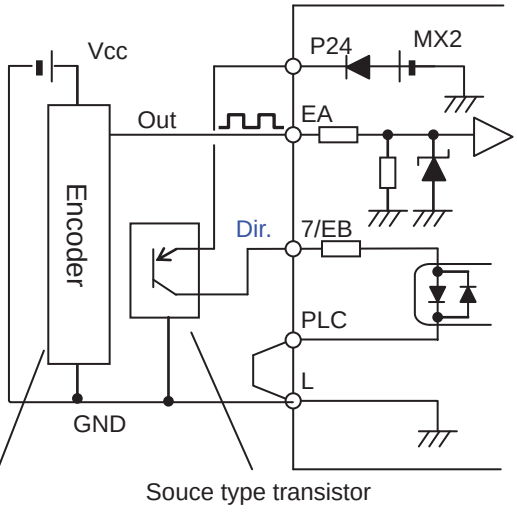

Souce type transistor

PNP open collector type or
voltage output type encoder

Simple positioning setting

- Set "01" in [EA] selection (P003), then pulse train input is used as feedback signal from encoder.
- Set "02" in simple positioning selection (P012), then simple positioning is enabled. (If "00" is set, "V/f control with FB" is enabled. Please refer to xx for further information.
- Up to 8 position data are commanded by combination of 3 input terminals configured as CP1 to CP3.
- Besides positioning input, RUN command (FW,RV) is necessary. Since rotation direction does not matter for positioning, both FW and RV work as RUN command.
- Positioning speed depends on frequency source (A001).

- More than four digits are required for positioning data, but only four higher digits are displayed.

Code	Item	Data or data range	Description
P003	EA terminal selection	01	Encoder feedback
P004	Pulse train input mode for feedback	00	Single phase pulse train
		01	90 ph. difference 2-ph. pulse train 1
		02	90 ph. difference 2-ph. pulse train 2
		03	Single phase pulse train + direction
P011	Encoder pulses	32 to 1024	
P012	Simple positioning selection	02	Simple positioning enabled
P014	Creep pulse ratio	0.0 to 400.0	Distance that will be use for the positioning sequence and the creep speed operation. 100.0% means one motor turn.
P015	Creep speed	Start freq. to 10.00 Hz	
P026	Overspeed error detection level	0.0 to 150.0 %	
P027	Speed deviation error detection level	0.00 to 120.00 Hz	
P072	Position range specification (forward)	0 to +268435455	Higher 4-digits displayed
P073	Position range specification (reverse)	-268435455 to 0	Higher 4-digits displayed
P075	Positioning mode	00	With limitation
		01	No limitation (shorter route) P004 is to be set 00 or 01
P077	Encoder disconnection timeout	0.0 to 10.0 s	
P080	Position restarting range	0 to 10000 [pulses]	
P081	Save position at power off	00: OFF 01: ON	
H050	Slip compensation P gain for V/f control with FB	0.00 to 10.00	
H051	Slip compensation I gain for V/f control with FB	0 to 1000 s	
d029	Position command monitor	-268435455 to +268435455	
d030	Current position monitor		
C102	Reset selection	03	Internal data is not cleared by reset
C001-C007	Multi-function input 1 selection	47	PCLR: Position deviation clear
C021-C022 C026	Multi-function output 11/12/AL selection	22	DSE: Excessive speed deviation
		23	POK: Position ready

Note 1 If 7/EB terminal is used (P004=01~03), set 85 (EB) in input 7 (C007). ON is forward and OFF is reverse direction.

Note 2 When 2-phase pulse is used, maximum frequency of phase-A and B are different (32kHz for A-phase, 2kHz for B-phase). In order to detect rotation direction over 2kHz, choose detection methods in P004.

P004	Item	Description
01	90° ph. difference 2-ph. pulse train 1	Keep the last direction
02	90° ph. difference 2-ph. pulse train 2	Depend on RUN command (FW or RV)

Note 3 For rotating coordinate system, if "01" is set in P075, the rotation direction of shorter routing is selected. In this case, set the number of pulse for one rotation in position-0 (P060). This value must be positive number.

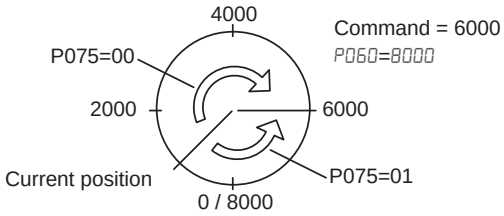

Note 4 When "01" is set in P075, P004 should be set to 00 or 01.

In the simple positioning mode, the inverter runs the motor until the machine reaches the target position according to the following settings, and then stops the motor with DC braking.

<1> Position setting

<2> Speed setting (frequency setting)

<3> Acceleration and deceleration time

(DC braking state is held until RUN command is turned off.)

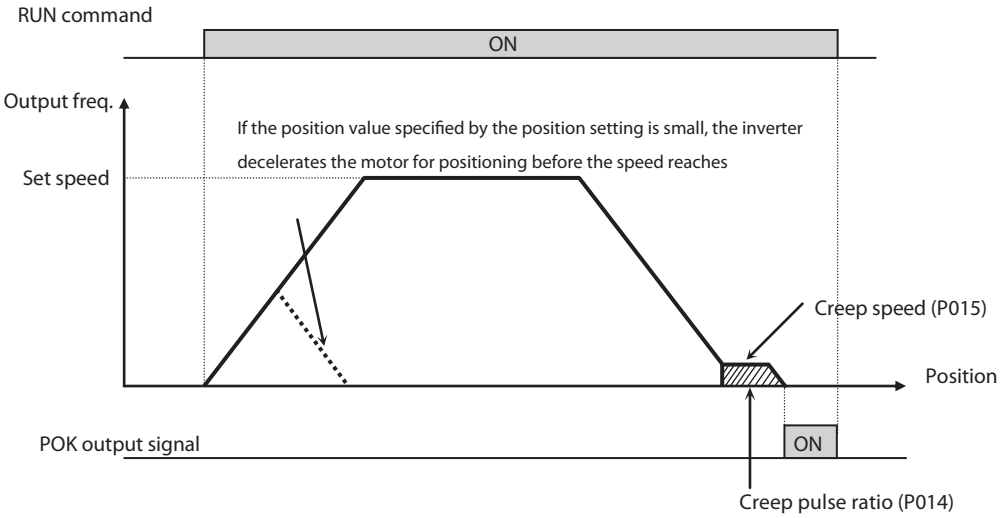

- In simple positioning mode, the frequency and acceleration/deceleration are according to current settings as same as normal operation.
- Depending on DC braking and creep speed setting, positioning may go off the point.
- If the position value specified by the position setting is small, the inverter may decelerate the motor for positioning before its speed reaches the speed setting.
- In simple positioning mode, the rotation direction setting (FW or RV) of the operation command is ignored. The operation command simply functions as the signal to run or stop the motor. The motor runs in the forward direction when the value of "target position" -(minus) "current position" is positive, or in the reverse position when the value is negative.
- The position at power up is home position (Position data = 0). If power is removed, current position data is lost except when current position save at power off function is selected setting P081 = 1 that allows to keep the latest position before the power off.
- When the operation command is turned on with 0 specified as the position setting, positioning is completed (with DC braking) without running the motor.

- Specify "03 (only to reset a trip)" for reset mode selection (C 102). If a value other than "03" is specified to C 102, the current position counter will be cleared when the inverter reset terminal (or reset key) is turned on. Be sure to specify "03" for reset mode selection (C 102) if you intend to use the value of the current position counter for operation after recovering the inverter from tripping by turning on the reset terminal (or reset key).
- If the PCLR function is assigned to a input terminal, turning it on to clear the current position counter. (But note that the internal position deviation counter is also cleared at the same time.)
- In simple positioning mode, ATR terminal is invalid. (Torque control does not work.)
- If current position is out of the set range, inverter will be tripped (E83) and coasting status.
- If position error becomes bigger than the value on P080, the inverter will return automatically to set point while the Run signal keeps On. This function is disable when P080 is set to 0.
- In case this function is used please remember to set P080 > P017.
- Both P017 and P080 are handle as edge counts so is necessary to divide by 4 to transform into encoder pulses.
- If P080 parameter is not "0", when the condition "Position error" > P080 is true, the inverter cancel DB and restart position management.
- To avoid repetition of a stop and the restarting of the position management, please set parameter P080 so that condition P080 > P017 is true.

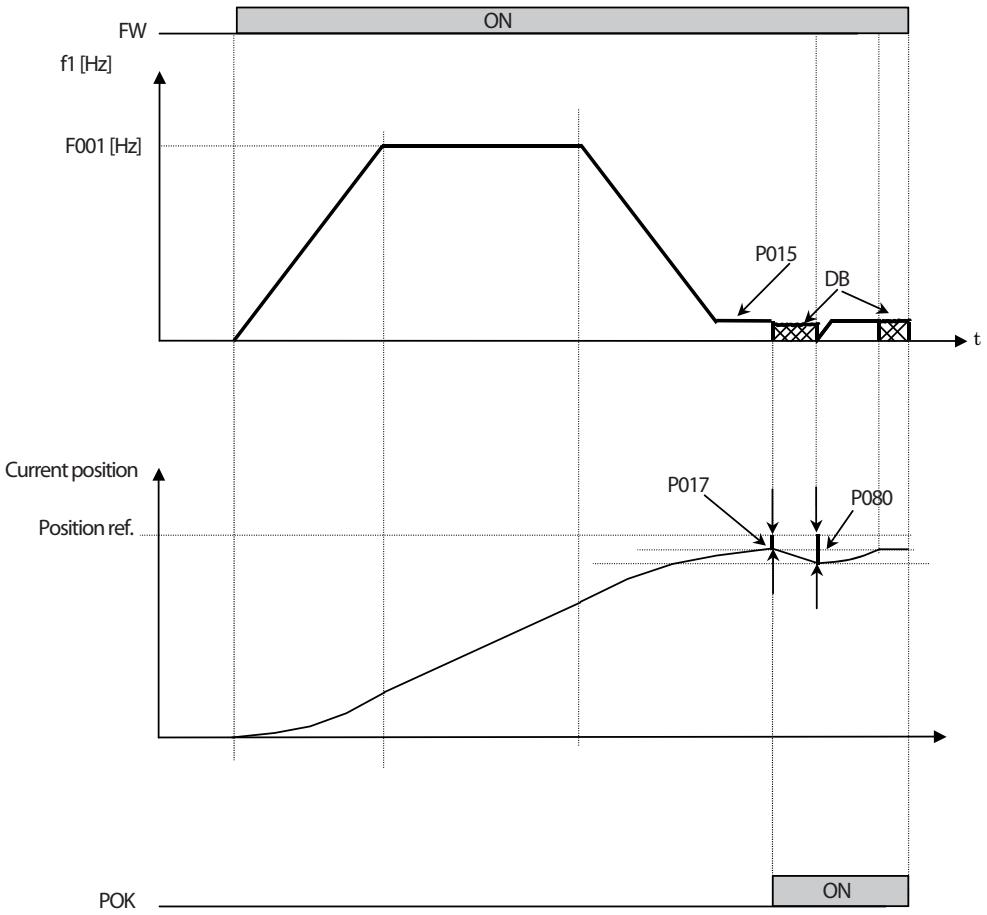

3-9-6 Multistage position switching function (CP1/CP2/CP3)

When functions "66 (CP1)" to "68 (CP3)" are assigned to input terminal [1] to [7] (C001 to C007), you can select multistage positions 0 to 7. Preset position data 0 to 7 in P060 to P067. If no assignment is set in terminals, position command will be position-0 (P060).

Code	Item	Data or data range	Description
P060	Multi-step position command 0	P073 to P072 (Displayed higher 4-digits only)	Defines the different positions that could be selected by digital inputs
P061	Multi-step position command 1		
P062	Multi-step position command 2		
P063	Multi-step position command 3		
P064	Multi-step position command 4		
P065	Multi-step position command 5		
P066	Multi-step position command 6		
P067	Multi-step position command 7		

Position setting	CP3	CP2	CP1
Multi-step position command 0 (P060)	0	0	0
Multi-step position command 1 (P061)	0	0	1
Multi-step position command 2 (P062)	0	1	0
Multi-step position command 3 (P063)	0	1	1
Multi-step position command 4 (P064)	1	0	0
Multi-step position command 5 (P065)	1	0	1
Multi-step position command 6 (P066)	1	1	0
Multi-step position command 7 (P067)	1	1	1

To avoid misinput due to time lag of each input, you can adjust the determination time in (C169). The input status is taken the preset time (C169) after the last change of input status. (Note that a long determination time deteriorates the input response.)

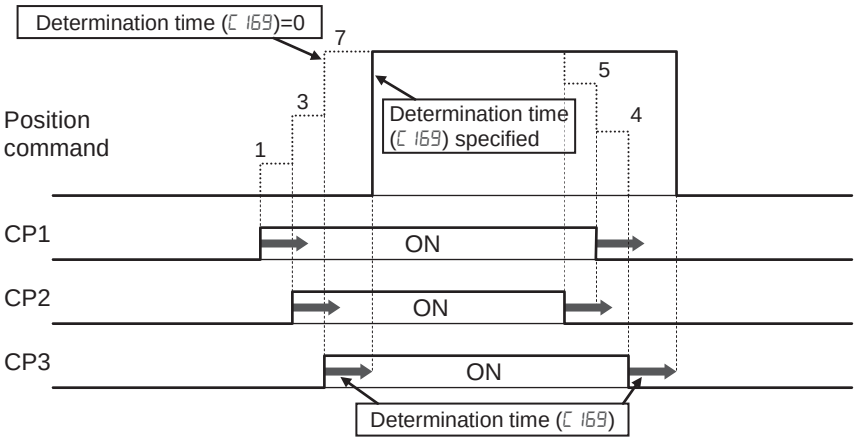

3-9-7 Speed/positioning switching function (SPD)

- Set SPD terminal ON, then speed control is enabled in simple positioning mode.
- While SPD terminal is ON, current position counter is 0. When SPD is turned OFF, the inverter starts positioning operation.
- If positioning command data is 0 at SPD turning OFF, the inverter start deceleration immediately. (Depending on DC braking setting, motor could be hunting.)
- While SPD terminal is ON, rotating direction depends on RUN command. Be sure to check rotating direction after switching to positioning operation.

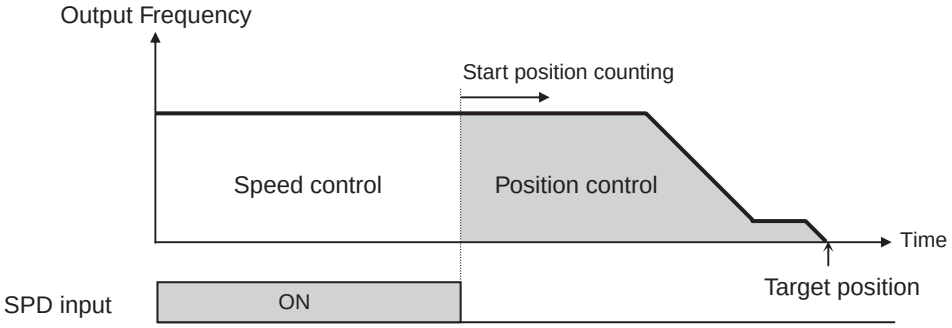

Parameter	Item	Data	Description
C001-C007	Multi-function input 1 to 7 selection	73	SPD: Speed/position switching

3-9-8 Homing function

- Two different homing function are available by setting homing mode selection (P068).
- When trigger signal of homing (70: ORG), the inverter starts homing operation. When homing is completed, current position data is reset (0).
- Direction of homing is specified in P069.
- If homing is not operated, position at power up is regarded as home position (0).

Code	Item	Data or data range	Description
P068	Zero return mode	00	Low speed
		01	High speed 1
P069	Zero return direction selection	00	FWD (Forward side)
		01	REV (Reverse side)
P070	Low-speed zero return frequency	0.00 to 10.00 Hz	
P071	High-speed zero return frequency	0.00 to 50.00 Hz	
C001 ~ C007	Multi-function input 1 to 7 selection	69	ORL: Zero return limit signal
		70	ORG: Zero return startup signal

(1) Low speed homing (P068 = 00)

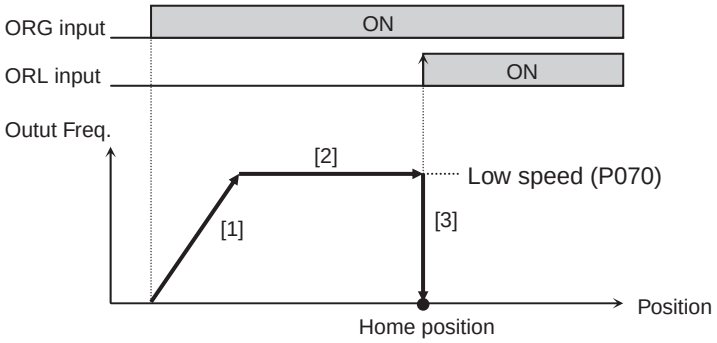

[1] Acceleration up to the speed P070.
[2] Running at low speed P070
[3] DC braking when ORL signal ON

(2) High speed homing (P068 = 01)

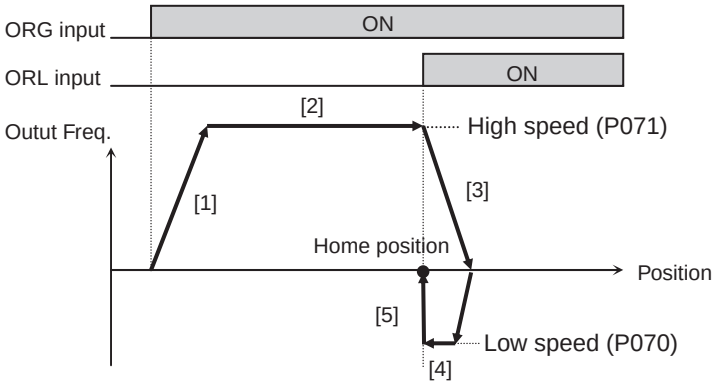

[1] Acceleration up to the speed P071.
[2] Running at high speed P071
[3] Deceleration when ORL signal ON
[4] Running at low speed P070 in reverse direction
[5] DC braking when ORL signal OFF

3-9-9 Preset Position Function

If the P083 parameter is not 0, when Input terminal function, "PSET(91)" which added newly as a set range of C001 to C007" is ON. the inverter set a value of (P083x4) into a current position inside level.

Here, P083 is the value that is not 4 multiply like a position command.

This function is effective about P075 (Positioning Mode Selection) = 00, 01 both sides.

"P" Function			Run Mode Edit	Defaults	
Func. Code	Name	Setting Range		EU	Units
P083	Preset position data	-268435455 to 268435455	✓	0	–

3-9-10 Positioning with Brake Control

In the case of brake control significance (b120=01), close brakes with the position management end in simple position control significance (P012=02). Ignore b127 as brakes injection frequency then and apply P015 (creep speed-setting) automatically.

In the case of brake control function is enabled (b120=01) and simple positioning function is enabled (P012=02), the inverter turns Brake ON, when position management was terminated. At this time, the inverter automatically ignores (b127) and applies Creep sped setting (P015) as Brake on frequency.

In the case of the above, the DB does not operate at the time of the position management end.

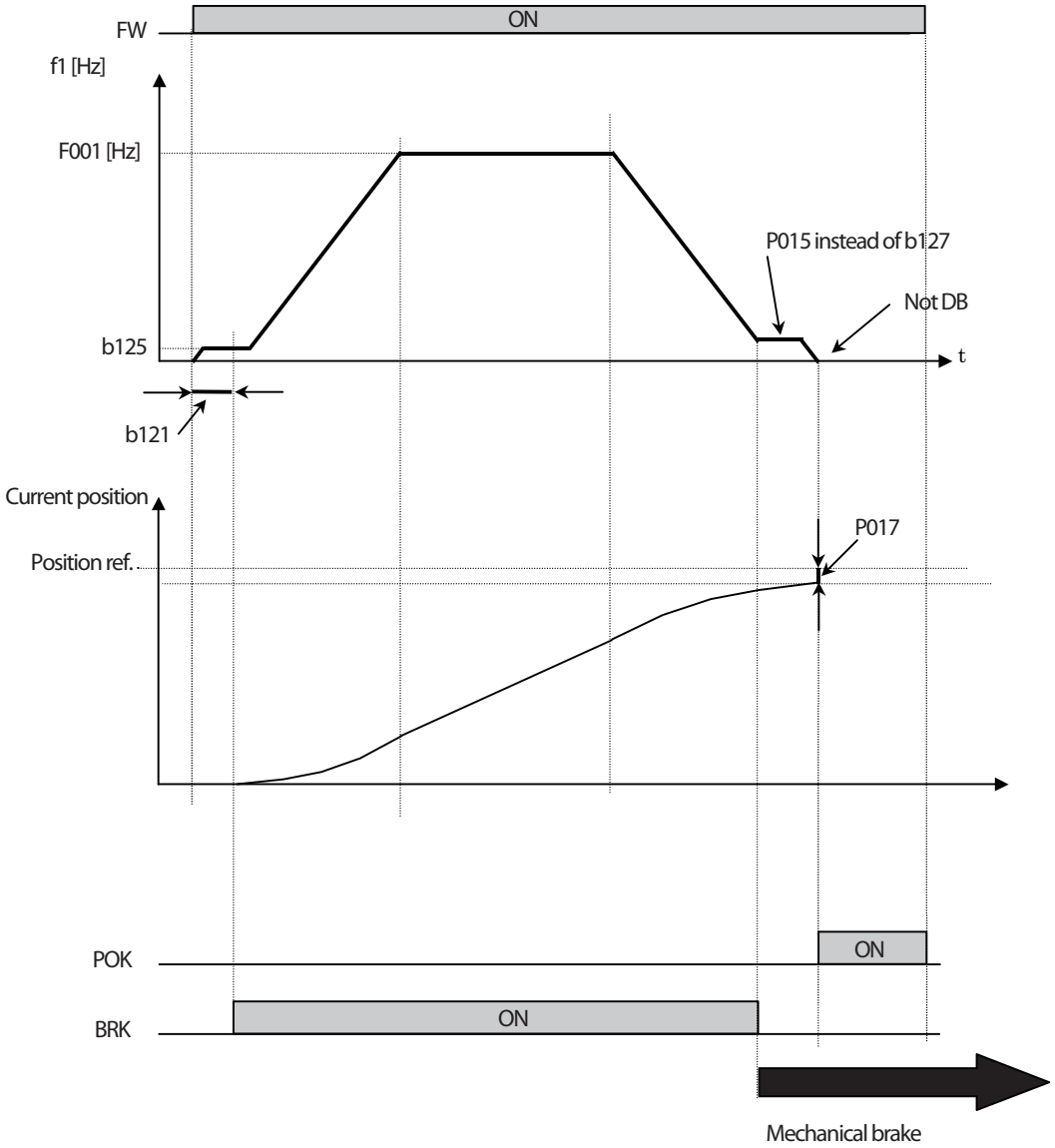

3-9-11 Drive Programming User Parameter Related Settings

Please refer to *SECTION 4 Operations and Monitoring* on page 191 for the detailed description of the function.

"P" Function			Run Mode Edit	Defaults	
Func. Code	Name	Description		EU	Units
P 100 ~ P 131	Drive Program parameter U(00) to U(31)	Each set range is 0~65535	✓	0	–

SECTION 4
Operations and Monitoring

4-1 Introduction

The previous material in Chapter 3 gave a reference listing of all the programmable functions of the inverter. We suggest that you first scan through the listing of inverter functions to fain a general familiarity. This chapter will build on that knowledge in the following ways:

1. **Related functions** – Some parameters interact with or depend on the settings in other functions. This chapter lists “required settings” for a programmable function to serve as a cross-reference and an aid in showing how function interacts.
2. **Intelligent terminals** – Some functions rely on an input signal on a control logic connector terminal, or generate output signals in other cases.
3. **Electrical interfaces** – This chapter shows how to make connections between the inverter and other electrical devices.
4. **Auto Tuning Performance** – This chapter shows how to perform auto tuning so to achieve good performance of the motor control.
5. **Positioning Performance** – This chapter shows how to realize simple positioning by using encoder (PG) feedback.
6. **PID Loop Operation** – The MX2 has a built-in PID loop that calculates the optimal inverter output frequency to control an external process. This chapter shows the parameters and input/output terminals associated with PID loop operation.
7. **Multiple motors** – A single MX2 inverter may be used with two or more motors in some types of applications. This chapter shows the electrical connections and inverter parameters involved in multiple-motor applications.

   The topics in this chapter can help you decide the features that are important to your application, and how to use them. The basic installation covered in Chapter 2 concluded with the powerup test and running the motor. Now, this chapter starts from that point and shows how to make the inverter part of a larger control or automation system.

4-1-1 Caution Messages for Operating Procedures

Before continuing, please read the following Caution messages.

⚠ **Caution** The heat sink fins will have a high temperature. Be careful not to touch them. Otherwise, there is the danger of getting burned.

⚠ **Caution** The operation of the inverter can be easily changed from low speed to high speed. Be sure to check the capability and limitations of the motor and machine before operating the inverter. Otherwise, it may cause injury to personnel.

⚠ **Caution** If you operate a motor at a frequency higher than the inverter standard default setting (50 Hz/60 Hz), be sure to check the motor and machine specifications with the respective manufacturer. Only operate the motor at elevated frequencies after getting their approval. Otherwise, there is the danger of equipment damage.

4-1-2 Warning Messages for Operating Procedures

⚠ **WARNING** Be sure to turn ON the input power supply only after closing the front case. While the inverter is energized, be sure not to open the front case. Otherwise, there is the danger of electric shock.

⚠ **WARNING** Be sure not to operate electrical equipment with wet hands. Otherwise, there is the danger of electric shock.

⚠ **WARNING** While the inverter is energized, be sure not to touch the inverter terminals even when the motor is stopped. Otherwise, there is the danger of electric shock.

⚠ **WARNING** If the retry mode is selected, the motor may suddenly restart after a trip stop. Be sure to stop the inverter before approaching the machine (be sure to design the machine so that safety for personnel is secure even if it restarts.) Otherwise, it may cause injury to personnel.

⚠ **WARNING** If the power supply is cut OFF for a short period of time, the inverter may restart operating after the power supply recovers if the Run command is active. If a restart may pose danger to personnel, so be sure to use a lock-out circuit so that it will not restart after power recovery. Otherwise, it may cause injury to personnel.

⚠ **WARNING** The Stop Key is effective only when the stop function is enabled. Be sure to enable the Stop Key separately from the emergency stop. Otherwise, it may cause injury to personnel.

⚠ **WARNING** During a trip event, if the alarm reset is applied and the Run command is present, the inverter will automatically restart. Be sure to apply the alarm reset only after verifying the Run command is OFF. Otherwise, it may cause injury to personnel.

⚠ **WARNING** Be sure not to touch the inside of the energized inverter or to put any conductive object into it. Otherwise, there is a danger of electric shock and/or fire.

⚠ **WARNING** If power is turned ON when the Run command is already active, the motor will automatically start and injury may result. Before turning ON the power, confirm that the RUN command is not present.

⚠ **WARNING** When the Stop key function is disabled, pressing the Stop key does not stop the inverter, nor will it reset a trip alarm.

⚠ **WARNING** Be sure to provide a separate, hard-wired emergency stop switch when the application warrants it.

4-2 Connecting to PLCs and Other Devices

Omron inverters (drives) are useful in many types of applications. During installation, the inverter keypad (or other programming device) will facilitate the initial configuration. After installation, the inverter will generally receive its control commands through the control logic connector or serial interface from another controlling device. In a simple application such as single-conveyor speed control, a Run/Stop switch and potentiometer will give the operator all the required control. In a sophisticated application, you may have a *programmable logic controller* (PLC) as the system controller, with several connections to the inverter.

It is not possible to cover all the possible types of application in this manual. It will be necessary for you to know the electrical characteristics of the devices you want to connect to the inverter. Then, this section and the following sections on I/O terminal functions can help you quickly and safely connect those devices to the inverter.

⚠ **Caution** It is possible to damage the inverter or other devices if your application exceeds the maximum current or voltage characteristics of a connection point.

The connections between the inverter and other devices rely on the electrical input/output characteristics at both ends of each connection, shown in the diagram to the right. The inverter's configurable inputs accept either a sourcing or sinking output from an external device (such as PLC). This chapter shows the inverter's internal electrical component(s) at each I/O terminal. In some cases, you will need to insert a power source in the interface wiring.

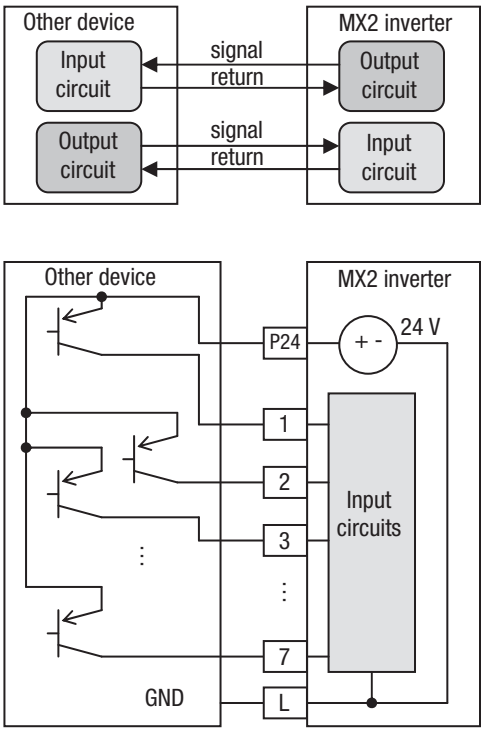

In order to avoid equipment damage and get your application running smoothly, we recommend drawing a schematic of each connection between the inverter and the other device. Include the internal components of each device in the schematic, so that it makes a complete circuit loop.

After making the schematic, then:

1. Verify that the current and voltage for each connection is within the operating limits of each device.
2. Make sure that the logic sense (active high or active low) of any ON/OFF connection is correct.
3. Check the zero and span (curve end points) for analog connections, and be sure the scale factor from input to output is correct.
4. Understand what will happen at the system level if any particular device suddenly loses power, or powers up after other devices.

4-2-1 Example Wiring Diagram

The schematic diagram below provides a general example of logic connector wiring, in addition to basic power and motor wiring converted in Chapter 2. The goal of this chapter is to help you determine the proper connections for the various terminals shown below for your application needs.

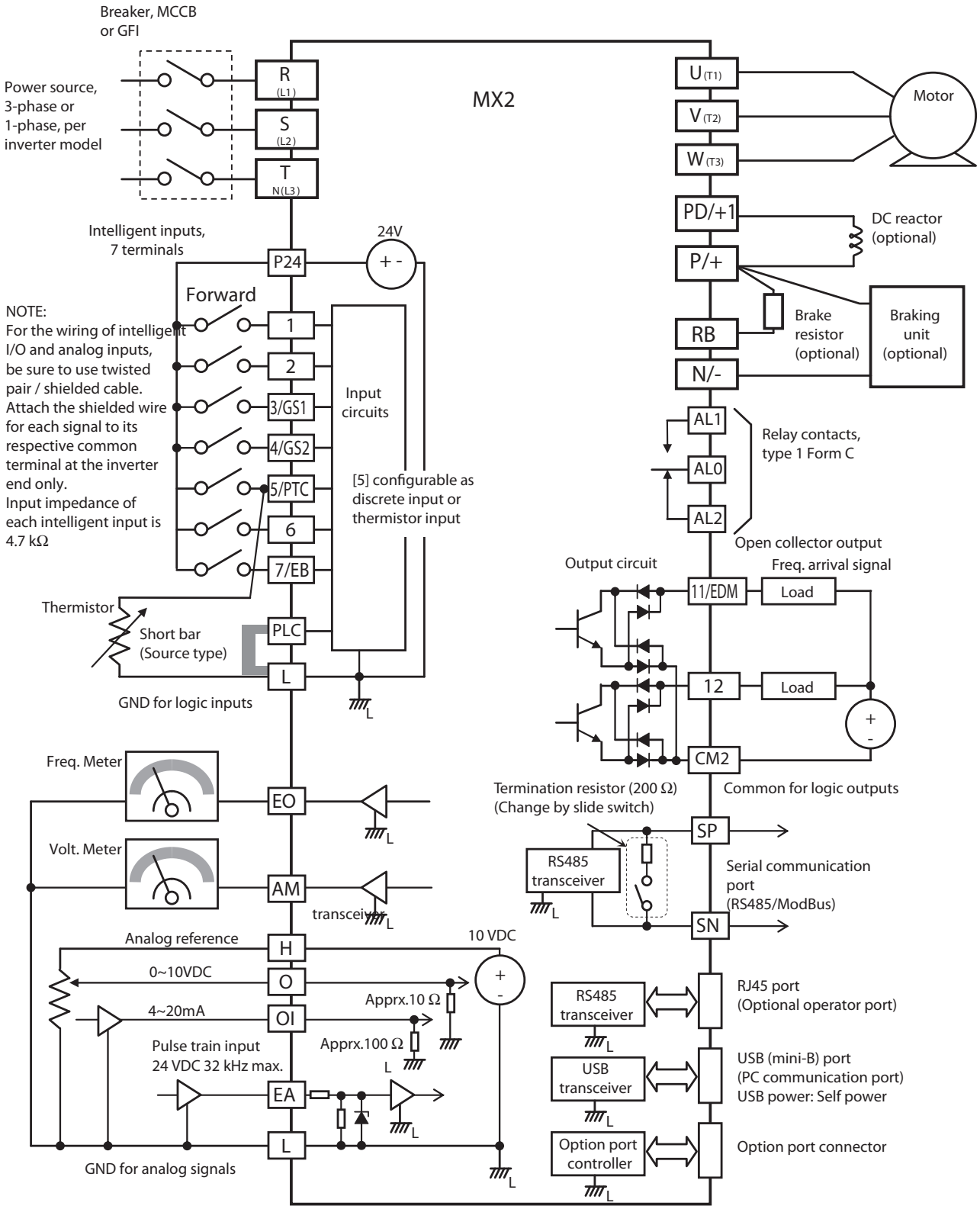

4-3 Control Logic Signal Specifications

The control logic connectors are located just behind the front housing cover. The relay contacts are just to the left of the logic connectors. Connector labeling is shown below.

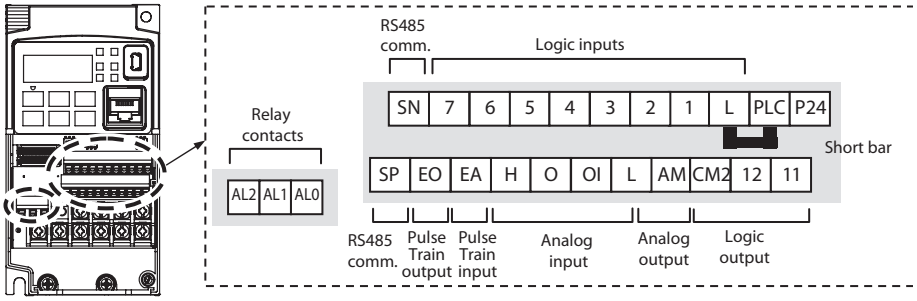

Terminal Name	Description	Ratings
P24	+24 V for logic inputs	24 VDC, 100 mA including DI (5mA each). (do not short to terminal L)
PLC	Intelligent input common	Factory set: Source type (connecting [P24] to [1]~[7] turns each input ON). To change to sink type, remove the short bar between [PLC] and [L], and connect it between [P24] and [L]. In this case, connecting [L] to [1]~[7] makes each input ON.
1 2 3/GS1 4/GS2 5/PTC 6 7/EB	Discrete logic inputs (Terminal [3],[4],[5] and [7] have dual function. See following description and related pages for the details.)	Voltage between each input and PLC ON voltage: 18 V min. OFF voltage: 3 V max. Allowable max. voltage: 27 VDC Load current: 5 mA (at 24 V)
GS1(3)	Safe stop input GS1	Functionality is based on ISO13849-1 See appendix for the details.
GS2(4)	Safe stop input GS2	
PTC(5)	Motor thermistor input	Connect motor thermistor between PTC and L terminal and assign [19:PTC] to detect the motor temperature by tripping when exceeding 3 kOhm. Set 19 in C005.
EB(7)	Pulse train input B	Input pulse 1.8 kHz max.* ON voltage: 18 V min. OFF voltage: 3 V max. Allowable max. voltage: 27 VDC Load current: 5 mA (at 24 V)
EA	Pulse train input A	Input pulse 32 kHz max. Voltage between input and L ON voltage: 4 V min. OFF voltage: 1 V max. Allowable max. voltage: 27 VDC
L (upper row) *1	GND for logic inputs	Sum of input [1]~[7] currents (return)
11/EDM	Discrete logic outputs [11] (Terminal [11] has dual function. See following description and related pages for the details.)	Open collector output Between each terminal and CM2 Allowable max. voltage: 27 V Allowable max. current: 50 mA Voltage drop when ON: 4 V max. In case the EDM is selected, the functionality is based on ISO13849-1
12	Discrete logic outputs [12]	
CM2	GND for logic output	100 mA: [11], [12] current return
AM	Analog voltage output	0~10 VDC 1 mA maximum

Terminal Name	Description	Ratings
EO	Pulse train output	Output pulse: 32 kHz max. Output voltage: 10 VDC Allowable max. current: 2 mA
L (bottom row) *2	GND for analog signals	Sum of [OI], [O], and [H] currents (return)
OI	Analog current input	0 to 20 mA range, 20 mA nominal, input impedance 100 Ω
O	Analog voltage input	0 to 10 VDC range, 10 VDC nominal, input impedance 10 KΩ
H	+10 V analog reference	10 VDC nominal Allowable max. current: 7 mA
SP, SN	Serial communication terminal	For RS485 Modbus communication Max. speed: 115.2 kbps Built-in Terminal Resistor: 200 Ω Slide switch selection
AL0	Relay common contact	Max. contact capacity AL1-AL0: 250 VAC, 2 A (resistance) 0.2 A (induction) AL2-AL0: 250 VAC, 1 A (resistance) 0.2 A (induction) Contact min. capacity: 100 VAC, 10 mA 5VDC, 100 mA
AL1 *3	Relay contact, normally open	
AL2 *3	Relay contact, normally closed	

* In combination with Pulse train input A it is used to check direction below 1.8 kHz.

Note 1 The two terminals [L] are electrically connected together inside the inverter.

Note 2 We recommend using [L] logic GND (to the right) for logic input circuits and [L] analog GND (to the left) for analog I/O circuits.

Note 3 Default relay N.O./N.C. configuration is reversed. See 4-5-11 *Forced Operator* on page 214.

4-3-1 Wiring sample of control logic terminal (source logic)

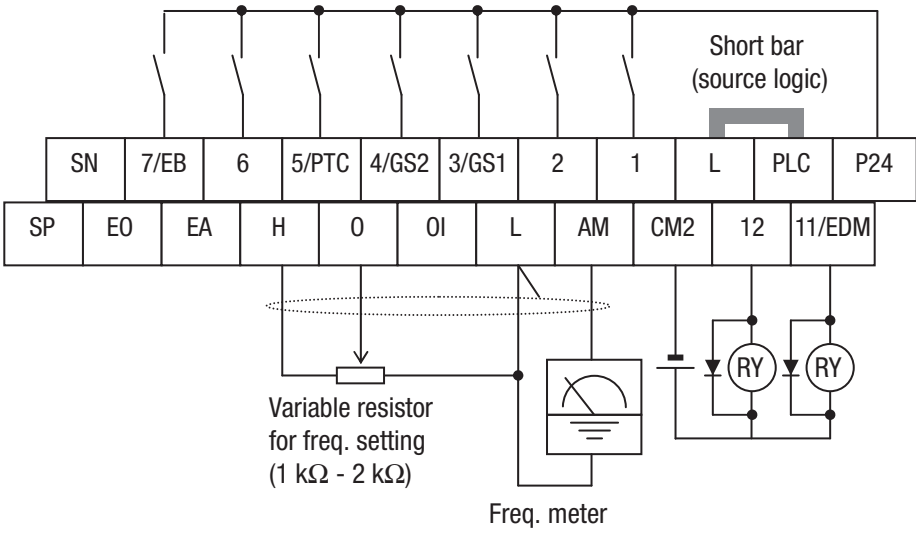

Note If relay is connected to intelligent output, install a diode across the relay coil (reverse-biased) in order to suppress the turn-off spike.

4-3-2 Sink/source logic of intelligent input terminals

Sink or source logic is switched by a short bar as below.

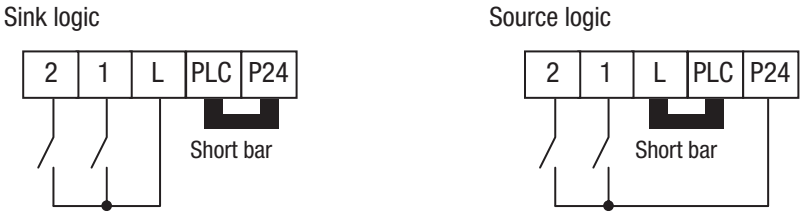

4-3-3 Wire size for control and relay terminals

Use wires within the specifications listed below. For safe wiring and reliability, it is recommended to use ferrules, but if solid or stranded wire is used, stripping length should be 8 mm.

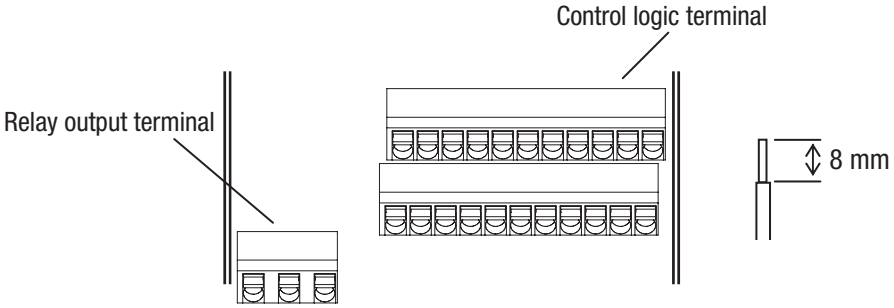

	Solid mm² (AWG)	Stranded mm² (AWG)	Ferrule mm² (AWG)
Control logic terminal	0.2 to 1.5 (AWG 24 to 16)	0.2 to 1.0 (AWG 24 to 17)	0.25 to 0.75 (AWG 24 to 18)
Relay terminal	0.2 to 1.5 (AWG 24 to 16)	0.2 to 1.0 (AWG 24 to 17)	0.25 to 0.75 (AWG 24 to 18)

4-3-4 Recommended ferrule

For safe wiring and reliability, it is recommended to use following ferrules.

Wire size mm² (AWG)	Model name of ferrule *1	L [mm]	Φd [mm]	ΦD [mm]
0.25 (24)	AI 0.25-8YE	12.5	0.8	2.0
0.34 (22)	AI 0.34-8TQ	12.5	0.8	2.0
0.5 (20)	AI 0.5-8WH	14	1.1	2.5
0.75 (18)	AI 0.75-8GY	14	1.3	2.8

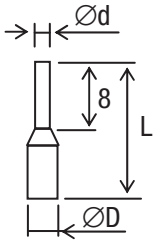

Note 1 Phoenix contact
Crimping pliers: CRIPMFOX UD 6-4 or CRIMPFOX ZA 3

4-3-5 How to connect?

1. Push down the cable in the input. Cable is connected.
2. To remove the wire push down the orange actuating lever by a slotted screwdriver (width 2.5 mm max.) Then pull out the cable while pressing the screwdriver.

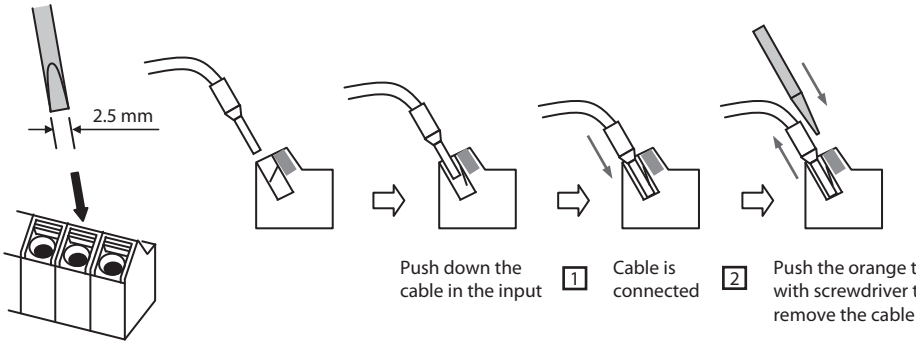

4-4 Intelligent Terminal Listing

4-4-1 Intelligent Inputs

Use the following table to locate pages for intelligent input material in this chapter.

Input Function Summary Table			
Symbol	**Code**	**Function Name**	**Page**
FW	00	Forward Run/Stop	205
RV	01	Reverse Run/Stop	205
CF1	02	Multi-step speed setting binary 1	96
CF2	03	Multi-step speed setting binary 2	96
CF3	04	Multi-step speed setting binary 3	96
CF4	05	Multi-step speed setting binary 4	96
JG	06	Jogging	99
DB	07	External DC injection braking	105
SET	08	Set 2nd control	206
2CH	09	2-step acceleration/deceleration	115
FRS	11	Free-run stop	207
EXT	12	External trip	208
USP	13	Unattended start protection	208
CS	14	Commercial switch	209
SFT	15	Soft lock	130
AT	16	Analog input switching	93
RS	18	Reset	210
PTC	19	PTC thermistor Thermal Protection	211
STA	20	3-wire start	212
STP	21	3-wire stop	212
F/R	22	3-wire forward/reverse	212
PID	23	PID enabled/disabled	109
PIDC	24	PID integral reset	109
UP	27	UP/DWN function accelerated	213
DWN	28	UP/DWN function decelerated	213
UDC	29	UP/DWN function data clear	213
OPE	31	Forced operator	214
SF1~SF7	32~38	Multi-step speed setting bit 1 to 7	96

Input Function Summary Table			
Symbol	**Code**	**Function Name**	**Page**
OLR	39	Overload limit switching	128
TL	40	Torque limit enabled	137, 215
TRQ1	41	Torque limit switching 1	137, 215
TRQ2	42	Torque limit switching 2	137, 215
BOK	44	Brake confirmation	147, 215
LAC	46	LAD cancel	216
PCLR	47	Position deviation clear	157
ADD	50	Frequency addition	217
F-TM	51	Forced terminal block	218
ATR	52	Torque command input permission	180
KHC	53	Integrated power clear	142
MI1~MI7	56~62	Drive programming input 1 to 7	219
AHD	65	Analog command held	220
CP1~CP3	66~68	Position command selection 1 to 3	186, 221
ORL	69	Zero return limit signal	187, 222
ORG	70	Zero return startup signal	187, 222
SPD	73	Speed/position switching	187, 223
GS1	77	STO1 input (Safety related signal)	223
GS2	78	STO2 input (Safety related signal)	223
485	81	Starting communication signal	314
PRG	82	Drive program start	223
HLD	83	Retain output frequency	108, 224
ROK	84	Permission of Run command	224
EB	85	Rotation direction detection (phase B)	179
DISP	86	Display limitation	224
NO	255	No allocation	-

4-4-2 Intelligent Outputs

Use the following table to locate pages for intelligent output material in this chapter.

Input Function Summary Table			
Symbol	**Code**	**Function Name**	**Page**
RUN	00	Run Signal	228
FA1	01	Constant speed arrival signal	164, 229
FA2	02	Over set frequency arrival signal	164, 229
OL	03	Overload warning	164, 231
OD	04	Excessive PID deviation	165, 232
AL	05	Alarm output	233
FA3	06	Set-frequency-only arrival signal	229
OTQ	07	Overtorque	165, 235
UV	09	Signal during undervoltage	235
TRQ	10	Torque limit	138, 236
RNT	11	RUN time over	132, 236
ONT	12	Power ON time over	132, 236
THM	13	Thermal warning	127, 237
BRK	19	Brake release	148, 237
BER	20	Brake error	147, 237
ZS	21	0 Hz signal	238
DSE	22	Excessive speed deviation	183, 239
POK	23	Position ready	183, 239

Input Function Summary Table			
Symbol	**Code**	**Function Name**	**Page**
FA4	24	Set frequency exceeded 2	229
FA5	25	Set frequency only 2	229
OL2	26	Overload warning 2	231
ODc	27	Analog O disconnection detection	240
OIDc	28	Analog OI disconnection detection	240
FBV	31	PID FB status output	241
NDc	32	Network error	243
LOG1~3	33~35	Logic operation output 1 to 3	170, 244
WAC	39	Capacitor life warning signal	245
WAF	40	Cooling fan life warning signal	245
FR	41	Starting contact signal	245
OHF	42	Fin overheat warning	165, 246
LOC	43	Light load detection signal	164, 246
MO1~3	44~46	Drive programming output 1 to 3	246
IRDY	50	Operation ready signal	247
FWR	51	Forward run signal	247
RVR	52	Reverse run signal	247
MJA	53	Fatal fault signal	248
WCO	54	Window comparator O	141, 248
WCOI	55	Window comparator OI	141, 248
FREF	58	Frequency Command Source	248
REF	59	Run Command Source	248
SETM	60	2nd motor in operation	249
EDM	62	STO (Safe Torque Off) Performance Monitor (Output terminal 11 only)	249
OPO	63	Option board output	-
no	255	Not used	-

4-5 Using Intelligent Input Terminals

Terminals [1], [2], [3], [4], [5], [6] and [7] are identical, programmable inputs for general use. The input circuits can use the inverter's internal (isolated) +24 V field supply or an external power supply. This section describes input circuits operation and how to connect them properly to switches or transistor outputs on field devices.

The MX2 inverter features selectable *sinking* or *sourcing inputs*. These terms refer to the connection to the external switching device-it either *sinks* current (from the input to GND) or *sources* current (from a power source) into the input. Note that the sink/source naming convention may be different in your particular country or industry. In any case, just follow the wiring diagrams in this section for your application.

The inverter has a short bar (jumper) for configuring the choice of sinking or sourcing inputs. To access it, you must remove the front cover of the inverter housing. In the figure to the top right, the short bar is shown as attached to the logic terminal block (connector). Originally is located as source type logic. If you need to change to the sink type connection, remove the short bar and connect it as shown in the figure at the bottom right.

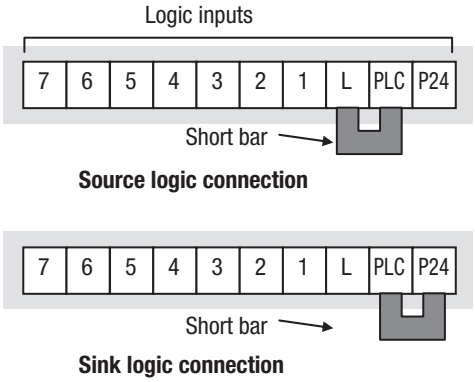

⚠ Caution Be sure to turn OFF power to the inverter before changing the short circuit bar position. Otherwise, damage to the inverter circuitry may occur.

[PLC] Terminal Wiring – The [PLC] terminal (Programmable Logic Control terminal) is named to include various devices that can connect to the inverter's logic inputs. In the figure to the right, note the [PLC] terminal and the short bar (jumper). Locating the short bar between [PLC] and [L] sets the input logic source type, which is the default setting. In this case, you connect input terminal to [P24] to make it active. If instead you locate the short bar between [PLC] and [P24], the input logic will be sink type. In this case, you connect the input terminal to [L] to make it active.

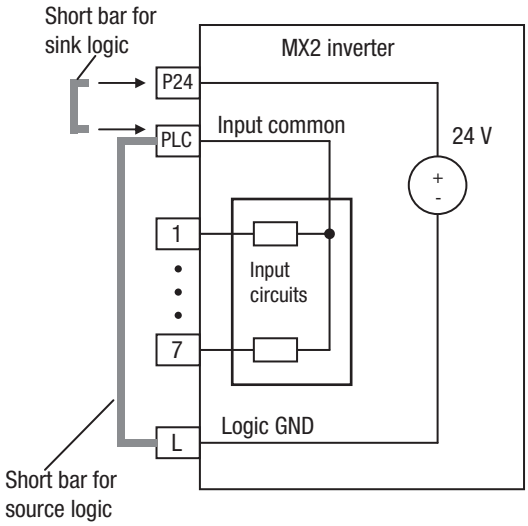

The wiring diagram on the following pages show the four combinations of using sourcing or sinking inputs, and using the internal or an external DC supply.

The two diagrams below input wiring circuits using the inverter's internal +24 V supply. Each diagram shows the connection for simple switches, or for a field device with transistor outputs. Note that in the lower diagram, it is necessary to connect terminal [L] only when using the field device with transistors. Be sure to use the correct connection of the short bar shown for each wiring diagram.

Sinking Inputs, Internal Supply

Short bar = [PLC] – [P24] position

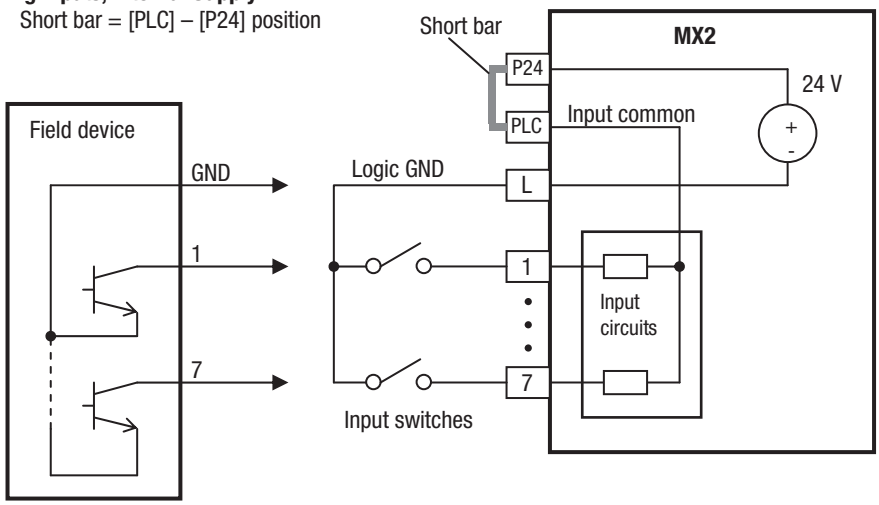

Open collector outputs,
NPN transistors

Sourcing Inputs, Internal Supply

Short bar = [PLC] – [L] position

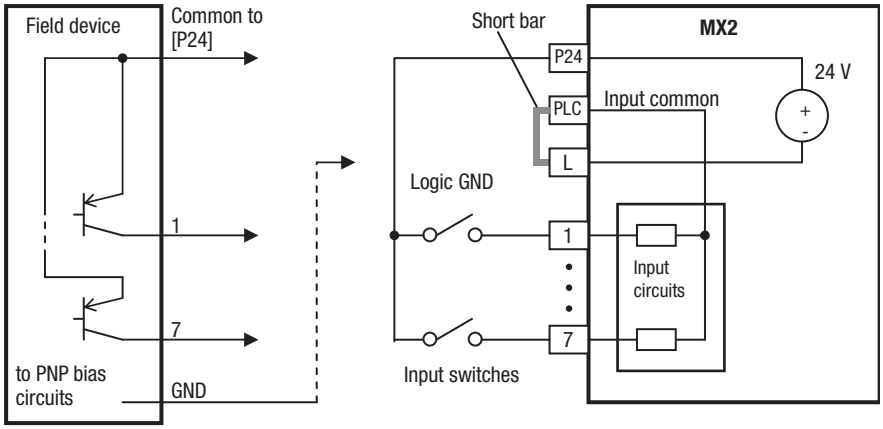

PNP transistor
sousing outputs

The two diagrams below show input wiring circuits using an external supply. If using the “Sinking Inputs, External Supply” in below wiring diagram, be sure to remove the short bar, and use a diode (*) with the external supply. This will prevent a power supply contention in case the short bar is accidentally placed in the incorrect position. For the “Sourcing Inputs, External Supply”, please connect the short bar as drawn in the diagram below.

Sinking Inputs, External Supply
Short bar = Removed

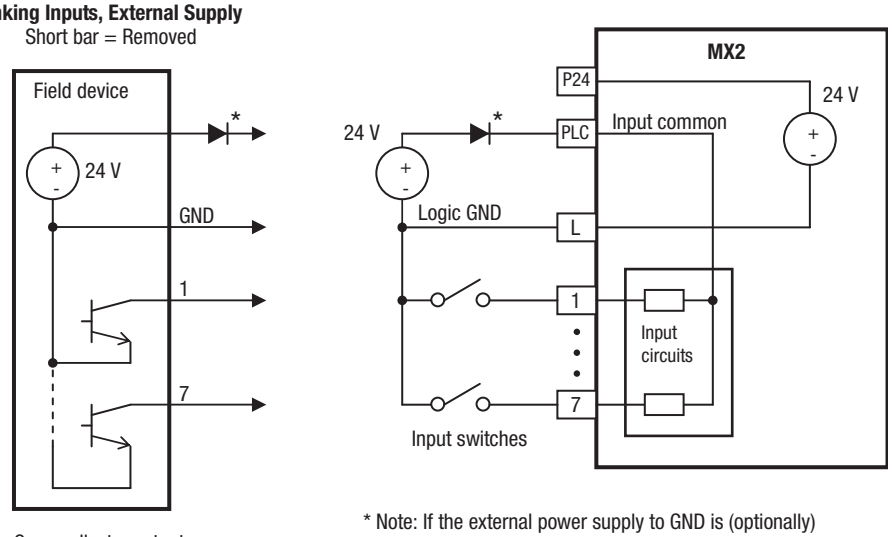

* Note: If the external power supply to GND is (optionally) connected to [L], then install the above diode.

Sourcing Inputs, External Supply
Short bar = [PLC] – [L]

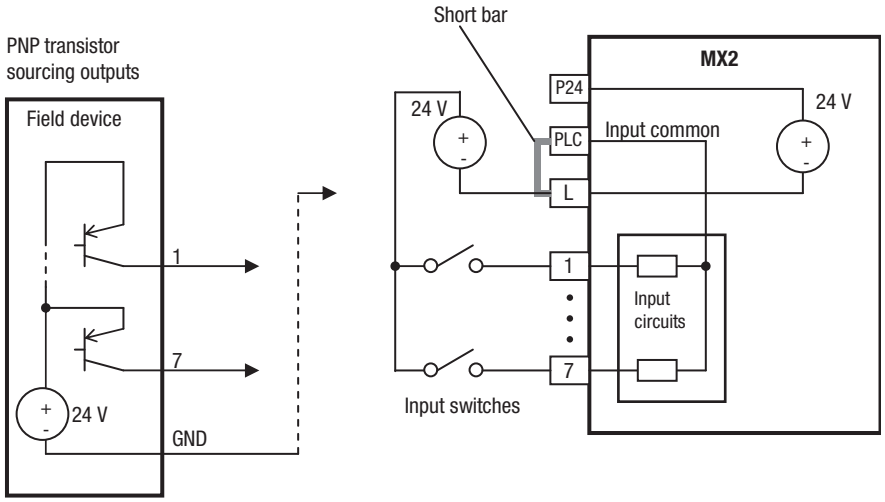

The power to the inverter control part can be supplied externally as shown below. Except driving motor, it is possible read and write the parameters by keypad and via communication even the drive itself is not powered.

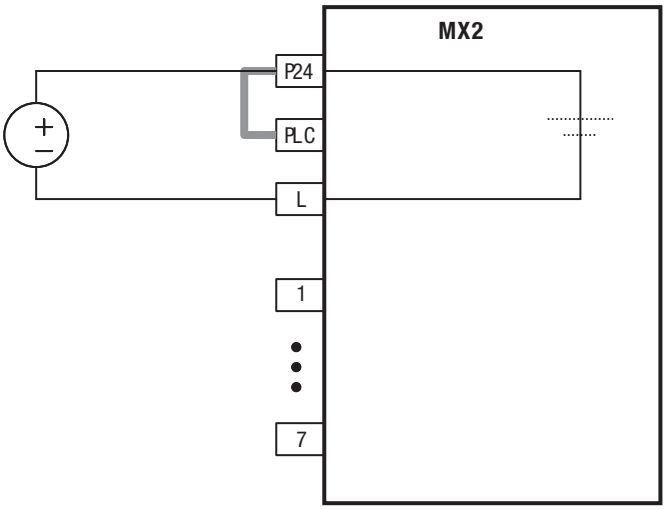

By having ability inverter doesn't block the current flowing into itself when it is not powered. This may cause the closed circuit when two or more inverters are connected to common I/O wiring as shown below to result in unexpected turning the on the input. To avoid this closed circuit, please put the diode (rated: 50 V/0.1 A) in the path as described below.

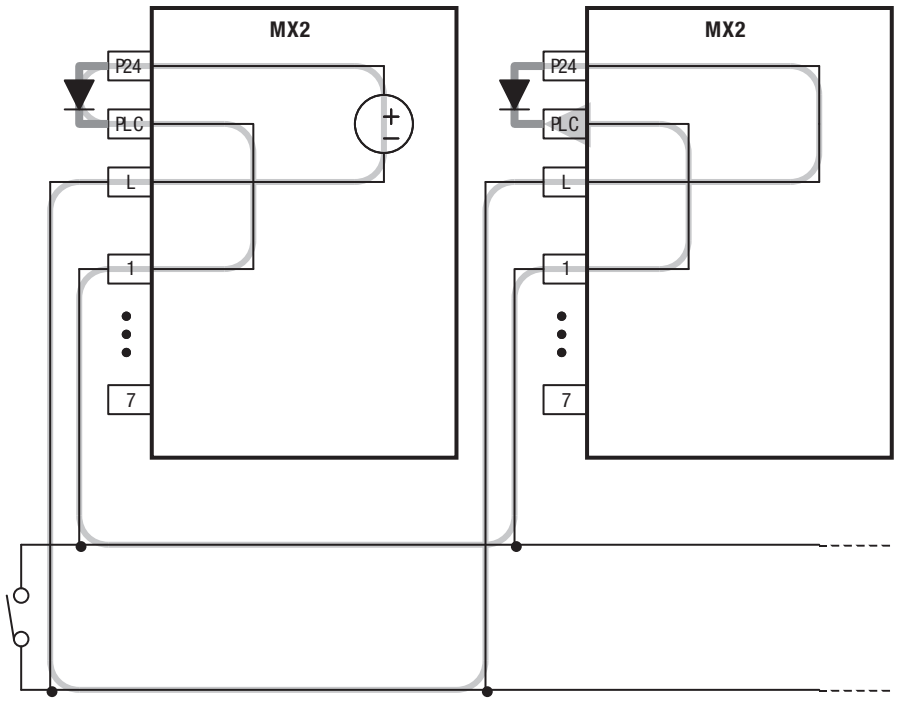

4-5-1 Forward Run/Stop and Reverse Run/Stop Commands:

When you input the Run command via the terminal [FW], the inverter executes the Forward Run command (high) or Stop command (low). When you input the Run command via the terminal [RV], the inverter executes the Reverse Run command (high) or Stop command (low).

Option Code	Terminal Symbol	Function Name	State	Description
00	FW	Forward Run/Stop	ON	Inverter is in Run Mode, motor runs forward
			OFF	Inverter is in Stop Mode, motor stops
01	RV	Reverse Run/Stop	ON	Inverter is in Run Mode, motor runs reverse
			OFF	Inverter is in Stop Mode, motor stops
Valid for inputs:		C001~C007		Example (default input configuration shown – see page 153)
Required settings:		A002 = 01		
Notes: • When the Forward Run and Reverse Run commands are active at the same time, the inverter enters the Stop Mode. • When a terminal associated with either [FW] or [RV] function is configured for *normally closed*, the motor starts rotation when that terminal is disconnected or otherwise has no input voltage.				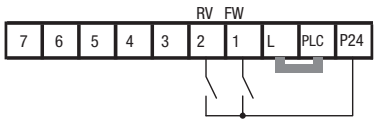 See I/O specs on page 195.

Note The parameter F004, Keypad Run Key Routing, determines whether the single Run key issues a Run FWD command or Run REV command. However, it has no effect on the [FW] and [RV] input terminal operation.

⚠ **WARNING** If the power is turned ON and the Run command is already active, the motor starts rotation and is dangerous! Before turning power ON, confirm that the Run command is not active.

4-5-2 Set Second Motor, Special Set

If you assign the [SET] function to an intelligent input terminal, you can select between two sets of motor parameters. The second parameters store an alternate set of motor characteristics. When the terminal [SET] is turned ON, the inverter will use the second set of parameters to generate the frequency output to the motor. When changing the state of the [SET] input terminal, the change will not take effect until the inverter is stopped.

When you turn ON the [SET] input, the inverter operates per the second set of parameters. When the terminal is turned OFF, the output function returns to the original settings (first set of motor parameters). Refer to “Configuring the Inverter for Multiple Motors” on page 172 for details.

Parameters	SET		Parameters	SET	
	Stop	Run		Stop	Run
F002/F202			A093/A293	✓	–
F003/F203	✓	–	A094/A294	✓	–
A001/A201	✓	–	A095/A295	✓	–
A002/A202	✓	–	A096/A296	✓	–
A003/A203	✓	–	b012/b212	✓	–
A004/A204	✓	–	b013/b213	✓	–
A020/A220	✓	–	b021/b221	✓	–
A041/A241	✓	–	b022/b222	✓	–
A042/A242	✓	–	b023/b223	✓	–
A043/A243	✓	–	C041/C241	✓	–
A044/A244	✓	–	H002/H202	✓	–
A045/A245	✓	–	H003/H203	✓	–
A046/A246	✓	–	H004/H204	✓	–
A047/A247	✓	–	H005/H205	✓	–
A061/A261	✓	–	H006/H206	✓	–
A062/A262	✓	–	H020~H024/ H220~H224	✓	–
A081/A281	✓	–		✓	
A082/A282	✓	–	H030~H034/ H230~H234	✓	–
A092/A292	✓	–		✓	

Option Code	Terminal Symbol	Function Name	State	Description
08	SET	Set (2nd control)	ON	causes the inverter to use the 2nd set of motor parameters for generating the frequency output to motor
			OFF	causes the inverter to use the 1st (main) set of motor parameters for generating the frequency output to motor
Valid for inputs:		C001~C007		
Required settings:		(none)		
Notes: • If the terminal state is changed while the inverter is running, the inverter continues using the current set of parameters until the inverter is stopped.				

4-5-3 Free-run Stop

When the terminal [FRS] is turned ON, the inverter stops the output and the motor enters the free-run state (coasting). If terminal [FRS] is turned OFF, the output resumes sending power to the motor if the Run command is still active. The free-run stop feature works with other parameters to provide flexibility in stopping and starting motor rotation.

In the figure below, parameter *b088* selects whether the inverter resumes operation from 0 Hz (left graph) or the current motor rotation speed (right graph) when the [FRS] terminal turns OFF. The application determines the best setting.

Parameter b003 specifies a delay time before resuming operation from a free-run stop. To disable this feature, use a zero delay time.

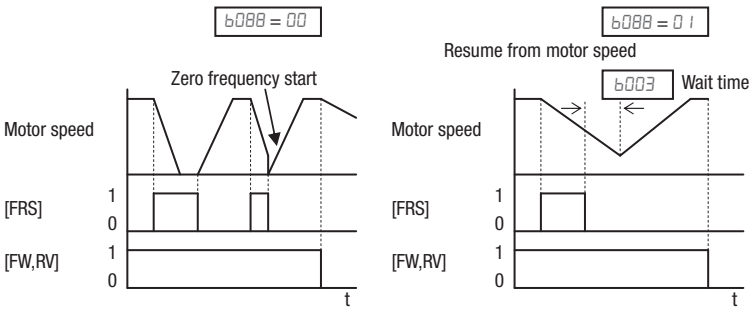

Option Code	Terminal Symbol	Function Name	State	Description
11	FRS	Free-run stop	ON	Causes output to turn OFF, allowing motor to free run (coast) to stop
			OFF	Output operates normally, so controlled deceleration and stops motor
Valid for inputs:		C001~C007		
Required settings:		b003, b088, C011 to C017		

Notes:

- When you want the [FRS] terminal to be active low (normally closed logic), change the setting (C011 to C017) that corresponds to the input (C001 to C007) that is assigned the [FRS] function.

4-5-4 External Trip

When the terminal [EXT] is turned ON, the inverter enters the trip state, indicates error code E 12, and stops the output. This is a general purpose interrupt type feature, and the meaning of the error depends on what you connect to the [EXT] terminal. Even if the [EXT] input is turned OFF, the inverter remains in the trip state. You must reset the inverter or cycle power to clear the error, returning the inverter to the Stop Mode.

In the graph below, the [EXT] input turns ON during normal Run Mode operation. The inverter lets the motor free-run to a stop, and the alarm output turns ON immediately. When the operator initiates a Reset command, the alarm and error are cleared. When the Reset is turned OFF, the motor begins rotation since the Run command is already active.

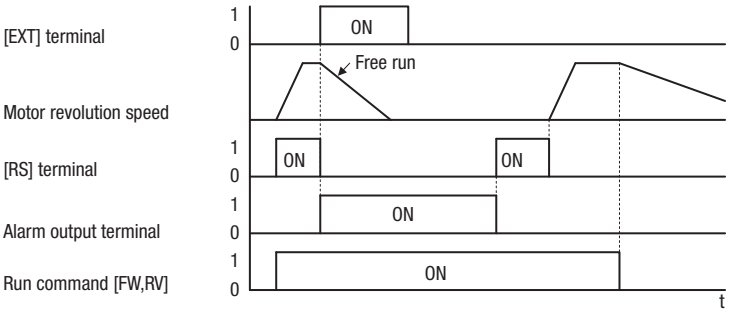

Option Code	Terminal Symbol	Function Name	State	Description
12	EXT	External trip	ON	When assigned input transitions OFF to ON, inverter latches trip event and displays E 12
			OFF	No trip event for ON to OFF, any recorded trip events remain in history until Reset.
Valid for inputs:		C001~C007		
Required settings:		(none)		

Notes:

- If the USP (Unattended Start Protection) feature is in use, the inverter will not automatically restart after canceling the EXT trip event. In that case, it must receive either another Run command (OFF-to- ON transition), a keypad Reset command, or an [RS] intelligent terminal input signal.

4-5-5 Unattended Start Protection

If the Run command is already set when power is turned ON, the inverter starts running immediately after powerup. The Unattended Start Protection (USP) function prevents that automatic startup, so that the inverter will not run without outside intervention. When USP is active and you need to reset an alarm and resume running, either turn the Run command OFF, or perform a reset operation by the terminal [RS] input or the keypad Stop/reset key.

In the figure below, the [USP] feature is enabled. When the inverter power turns ON, the motor does not start, even though the Run command is already active. Instead, it enters the USP trip state, and displays E 13 error code. This requires outside intervention to reset the alarm by turning OFF the Run com-

mand per this example (or applying a reset). Then the Run command can turn ON again and start the inverter output.

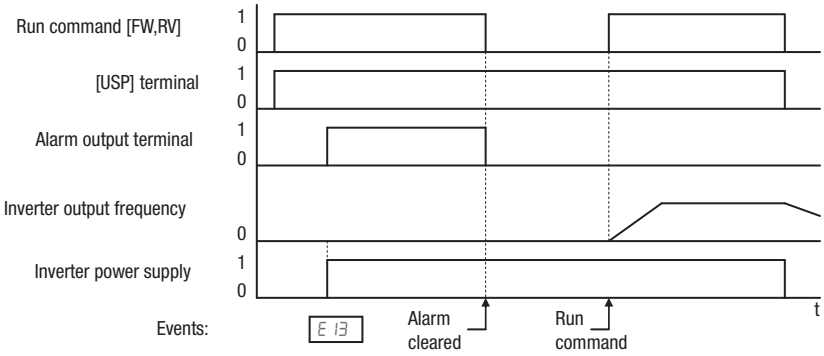

Option Code	Terminal Symbol	Function Name	State	Description
13	USP	Unattended Start Protection	ON	On powerup, the inverter will not resume a Run command
			OFF	On powerup, the inverter will resume a Run command that was active before power loss
Valid for inputs:		C001~C007		
Required settings:		(none)		

Notes:

- Note that when a USP error occurs and it is canceled by a reset from a [RS] terminal input, the inverter restarts running immediately.
- Even when the trip state is canceled by turning the terminal [RS] ON and OFF after an under voltage protection E09 occurs, the USP function will be performed.
- When the running command is active immediately after the power is turned ON, a USP error will occur. When this function is used, wait for at least 3 seconds after the powerup to generate a Run command.

4-5-6 Commercial switch

The commercial power source switching function allows you to switch the power supply (between the inverter and commercial power supply) to your system of which the load causes a considerable moment of inertia. You can use the inverter to accelerate and decelerate the motor in the system and the commercial power supply to drive the motor for constant speed operation.

To use this function, assign parameter " 14 (CS)" to one of the intelligent input terminal [1] to [7] (C001 to C007). When the CS is turned OFF with an operation command is being given, the inverter waits for the retry wait time before motor starts (b003), adjusts the output frequency to the speed of the free-running motor, and then accelerates the motor with the adjusted frequency.

Mechanically interlock the MC3 and MC2 contacts with each other. Otherwise you may damage the drive.

If the earth leakage breaker (ELB) trips because of a ground fault, the commercial power will be disabled. Therefore, contact a backup power supply from the commercial power line circuit (ELBC) to your system if needed.

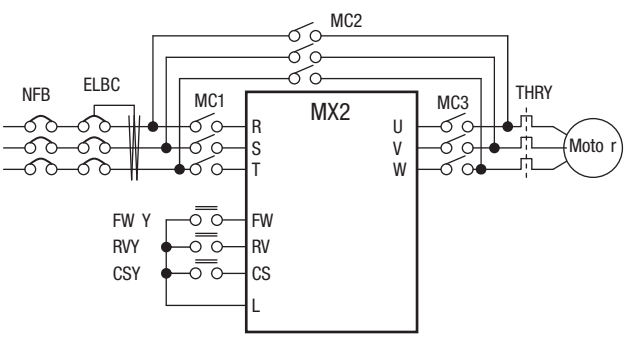

Use weak-current type relays for FWY, RVY, and CSY. The figures below show the sequence and timing of operations for reference.

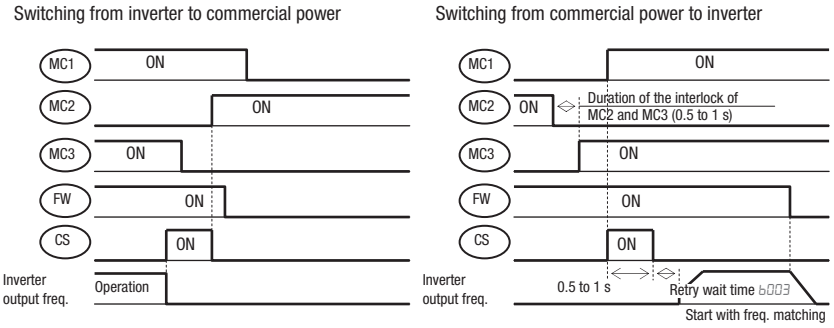

If the inverter trips because of overcurrent when it starts the motor with frequency matching, increase the retry wait time before motor starts (b003).

Option Code	Terminal Symbol	Function Name	State	Description
14	CS	Commercial switch	ON	
			OFF	
Valid for inputs:		C001~C007		
Required settings:		b003, b007		
Notes: inverter may start the motor with 0 Hz if: • the motor speed is no more than half of the base frequency, or • the voltage induced on the motor is attenuated quickly.				

4-5-7 Reset

The [RS] terminal causes the inverter to execute the reset operation. If the inverter is in Trip Mode, the reset cancels the Trip state. When the signal [RS] is turned ON and OFF, the inverter executes the reset operation.

⚠ WARNING After the Reset command is given and the alarm reset occurs, the motor will restart suddenly if the Run command is already active. Be sure to set the alarm reset after verifying that the Run command is OFF to prevent injury to personnel.

Option Code	Terminal Symbol	Function Name	State	Description
18	RS	Reset	ON	The motor output is turned OFF, the Trip Mode is cleared (if it exists), and powerup reset is applied
			OFF	Normal power ON operation
Valid for inputs:		C001~C007		
Required settings:		(none)		

Option Code	Terminal Symbol	Function Name	State	Description
Notes: • While the control terminal [RS] input is ON, the keypad displays alternating segments. After RS turns OFF, the display recovers automatically. • Pressing the Stop/Reset key of the digital operator can generate a reset operation only when an alarm occurs. • A terminal configured with the [RS] function can only be configured for normally open operation. The terminal cannot be used in the normally closed contact state. • When input power is turned ON, the inverter performs the same reset operation as it does when a pulse on the [RS] terminal occurs. • The Stop/Reset key on the inverter is only operational for a few seconds after inverter powerup when a hand-held remote operator is connected to the inverter. • If the [RS] terminal is turned ON while the motor is running, the motor will be free running (coasting). • If you are using the output terminal OFF delay feature (any of C145, C147, C149 > 0.0 sec.), the [RS] terminal affects the ON-to-OFF transition slightly. Normally (without using OFF delays), the [RS] input causes the motor output and the logic outputs to turn OFF together, immediately. However, when any output uses an OFF delay, then after the [RS] input turns ON, that output will remain ON for an additional 1 sec. period (approximate) before turning OFF.				

4-5-8 Thermistor Thermal Protection

Motors that are equipped with a thermistor can be protected from overheating. Input terminal [5] has the unique ability to sense a thermistor resistance. When the resistance value of the thermistor connected to terminal [PTC] (5) and [L] is more than 3 kΩ ±10%, the inverter enters the Trip Mode, turns OFF the output to the motor, and indicates the trip status E35. Use this function to protect the motor from overheating.

Option Code	Terminal Symbol	Function Name	State	Description
19	PTC	Thermistor Thermal Protection	ON	When a thermistor is connected to terminals [5] and [L], the inverter checks for over-temperature and will cause trip (E35) and turn OFF the output to the motor
			OFF	An open circuit in the thermistor causes a trip, and the inverter turns OFF the output
Valid for inputs:		C001 only		Example (requires input configuration – see page 153): 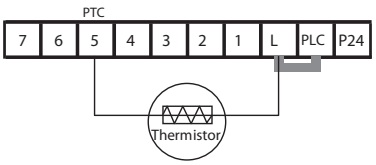
Required settings:		(none)		
Notes: • Be sure the thermistor is connected to terminals [5] and [L]. If the resistance is above the threshold the inverter will trip. When the motor cools down enough, the thermistor resistance will change enough to permit you to clear the error. Press the STOP/Reset key to clear the error.				

4-5-9 Three-wire Interface Operation

The 3-wire interface is an industry standard motor control interface. This function uses two inputs for momentary contact start/stop control, and a third for selecting forward or reverse direction. To implement the 3-wire interface, assign 20 [STA] (Start), 21 [STP] (Stop), and 22 [F/R] (Forward/Reverse) to three of the intelligent input terminals. Use a momentary contact for Start and Stop. Use a selector switch, such as SPST for the Forward/Reverse input. Be sure to set the operation command selection A002=01 for input terminal control of motor.

If you have a motor control interface that needs logic-level control (rather than momentary pulse control), use the [FW] and [RV] inputs instead.

Option Code	Terminal Symbol	Function Name	State	Description
20	STA	3-wire start	ON	Start motor rotation on momentary contact (uses acceleration profile)
			OFF	No change to motor operation
21	STP	3-wire stop	ON	No change to motor operation
			OFF	Stop motor rotation on momentary contact (use deceleration profile)
22	F/R	3-wire forward/ reverse	ON	Select reverse direction of rotation
			OFF	Select forward direction of rotation
Valid for inputs:		C001~C007		
Required settings:		A002 = 01		

Notes:

- The STP logic is inverted. Normally the switch will be closed, so you open the switch to stop. In this way, a broken wire causes the motor to stop automatically (safe design).
- When you configure the inverter for 3-wire interface control, the dedicated [FW] terminal is automatically disabled. The [RV] intelligent terminal assignment is also disabled.

The diagram below shows the use of 3-wire control. STA (Start Motor) is an edge-sensitive input; an OFF-to-ON transition gives the Start command. The control of direction is level-sensitive, and the direction may be changed at any time. STP (Stop Motor) is also a level-sensitive input.

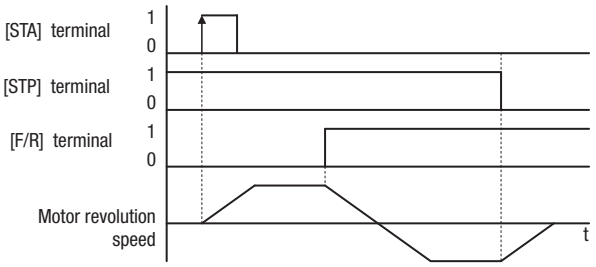

4-5-10 Remote Control Up and Down Functions

The [UP] [DWN] terminal functions can adjust the output frequency for remote control while the motor is running. The acceleration time and deceleration time of this function is same as normal operation ACC1 and DEC1 (2ACC1, 2DEC1). The input terminals operate according to these principles:

- Acceleration - When the [UP] contact is turned ON, the output frequency accelerates from the current value. When it is turned OFF, the output frequency maintains its current value at that moment.
- Deceleration - When the [DWN] contact is turned ON, the output frequency decelerates from the current value. When it is turned OFF, the output frequency maintains its current value at that moment.

In the graph below, the [UP] and [DWN] terminals activate while the Run command remains ON. The output frequency responds to the [UP] and [DWN] commands.

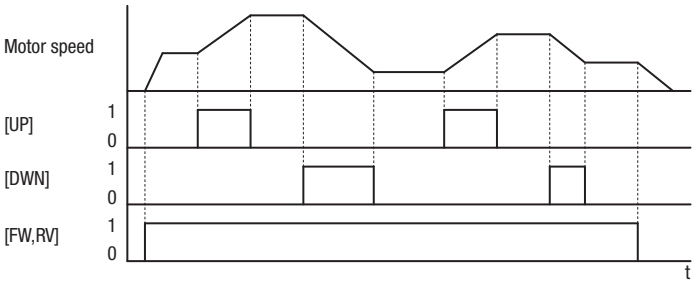

It is possible for the inverter to retain the frequency set from the [UP] and [DWN] terminals through a power loss. Parameter C101 enables/disables the memory. If disabled, the inverter retains the last frequency before an UP/DWN adjustment. Use the [UDC] terminal to clear the memory and return to the original set output frequency.

Option Code	Terminal Symbol	Function Name	State	Description
27	UP	UP/DWN function accelerated	ON	Accelerates (increases output frequency) motor from current frequency
			OFF	Output to motor operates normally
28	DWN	UP/DWN function decelerated	ON	Decelerates (decreases output frequency) motor from current frequency
			OFF	Output to motor operates normally
29	UDC	UP/DWN function data clear	ON	Clears the Up/Down frequency memory
			OFF	No effect on Up/Down memory
Valid for inputs:		C001~C007		
Required settings:		A001 = 02		

Notes:

- This feature is available only when the frequency command source is programmed for operator control. Confirm A001 is set to 02.
- This function is not available when [JG] is in use.
- The range of output frequency is 0 Hz to the value in A004 (maximum frequency setting).
- This setting modifies the inverter speed from using F001 output frequency setting as a starting point.

4-5-11 Forced Operator

This function permits a digital operator interface to override the following two settings in the inverter:

- A001 - Frequency reference selection
- A002 - RUN command selection

When using the [OPE] terminal input, typically A001 and A002 are configured for sources other than the digital operator interface for the output frequency and Run command sources, respectively. When the [OPE] input is ON, then user has immediate command of the inverter, to start or stop the motor and to set the speed.

Option Code	Terminal Symbol	Function Name	State	Description
31	OPE	Forced operator	ON	Forces the operator interface to override: A001 – Frequency Source Setting, and A002 – Run Command Source Setting
			OFF	Parameters A001 and A002 are in effect again, for the frequency source and the Run command source, respectively
Valid for inputs:		C001~C007		
Required settings:		A001 (set not equal to 00) A002 (set not equal to 02)		
Notes: • When changing the [OPE] state during Run Mode (inverter is driving the motor), the inverter will stop the motor before the new [OPE] state takes effect. • If the [OPE] input turns ON and the digital operator gives a Run command while the inverter is already running, the inverter stops the motor. Then the digital operator can control the motor.				

4-5-12 Overload Limit Switching

The inverter monitors the motor current during acceleration or constant speed operation and lowers output frequency automatically when the motor current reaches to the overload limit level.

This function prevents an overcurrent trip caused by excessive moment of inertia during acceleration, or caused by sporadic load fluctuations during constant speed operation.

You can set 2 types of overload limit functions in b021/b022/b023 and b024/b025/b026.

To switch between b021/b022/b023 and b024/b025/b026, allocate “39: OLR” to a multi-function input terminal and then turn it ON/OFF.

The overload limit level sets a current value for this function to work.

The overload limit parameter sets a time of deceleration from the maximum frequency to 0 Hz.

When this function operates while the Inverter is accelerating, the acceleration time becomes longer than the set time.

When the selected control method is sensorless vector control and “03: Enabled during acceleration/constant speed (accelerated during regeneration)” is selected for b021/b024, the frequency will increase if current exceeding the overload limit level flows during regeneration operation.

If the setting of Overload Limit Parameter b023/b026 is too small, an overvoltage trip may occur beacuse of regenerative energy from the motor even during acceleration. This is due to automatic deceleration under this function.

Make the following adjustments if this function operates during acceleration and the frequency doesn’t reach the target level.

- Increase the acceleration time.
- Increase the overload limit level (b022/b025).

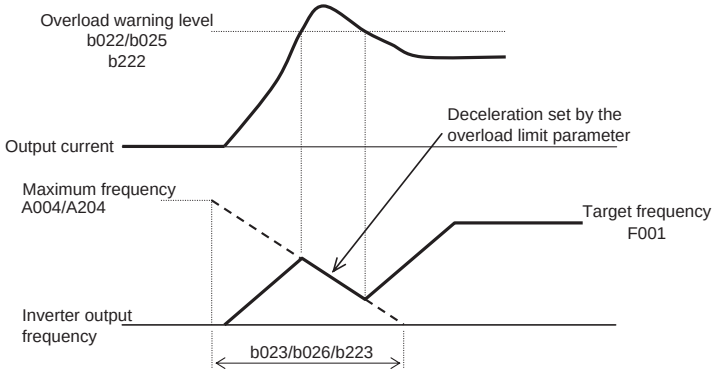

Option Code	Terminal Symbol	Function Name	State	Description
39	OLR	Overload limit switching	ON	Perform overload restriction
			OFF	Normal operation
Valid for inputs:		C001~C007		
Required settings:		b021~b026, b221~b223		

4-5-13 Torque Limit Enabled

This function is to select the torque limit mode. (Please refer to chapter 3 for the detailed description of the function.)

Option Code	Terminal Symbol	Function Name	State	Description
40	TL	Torque limit enabled	ON	b040 value is enabled as torque
			OFF	b040 value is disabled
Valid for inputs:		C001~C007		
Required settings:		b040~b044		

4-5-14 Torque Limit Switching

This function is to select the torque limit mode. (Please refer to chapter 3-6 for the detailed description of the function.)

Option Code	Terminal Symbol	Function Name	State	Description
41 42	TRQ1 TRQ2	Torque limit switching	ON OFF	Torque limit value of b041 to b044 will be selected by the combination of the switches.
Valid for inputs:		C001~C007		
Required settings:		b041~b044		

4-5-15 Brake Confirmation

This function is for brake performance. Please refer to chapter 3 for the detailed description of the function.

Option Code	Terminal Symbol	Function Name	State	Description
44	BOK	Brake confirmation	ON	Brake confirmation signal is being given
			OFF	Brake confirmation signal is not given
Valid for inputs:		C001~C007		
Required settings:		b120~b127, C021~C022		

4-5-16 LAD Cancel

This function is for canceling the set ramp time and changes the output speed immediately according to the set speed. (Please refer to chapter 3 for the detailed description of the function.)

Option Code	Terminal Symbol	Function Name	State	Description
46	LAD	LAD cancel	ON	Disabling the set ramp time and inverter output immediately follows the speed command.
			OFF	Accelerates and decelerates according to the set ramp time
Valid for inputs:		C001~C007		
Required settings:				

4-5-17 Position Deviation Clear

This function is for clearing the accumulated pulse numbers in case of positioning. (Please refer to chapter 3 for the detailed description of the function.)

Option Code	Terminal Symbol	Function Name	State	Description
47	PCLR	Position deviation clear	ON	Clears the accumulated pulse numbers.
			OFF	Does not clear the pulse numbers.
Valid for inputs:		C001~C007		
Required settings:				

4-5-18 Frequency Addition

The inverter can add or subtract an offset value to the output frequency setting which is specified by A001 (will work with any of the five possible sources). The ADD Frequency is a value you can store in parameter A145. The ADD Frequency is summed with or subtracted from the output frequency setting only when the [ADD] terminal is ON. Function A146 selects whether to add or subtract. By configuring an intelligent input as the [ADD] terminal, your application can selectively apply the fixed value in A145 to offset (positively or negatively) the inverter output frequency in real time.

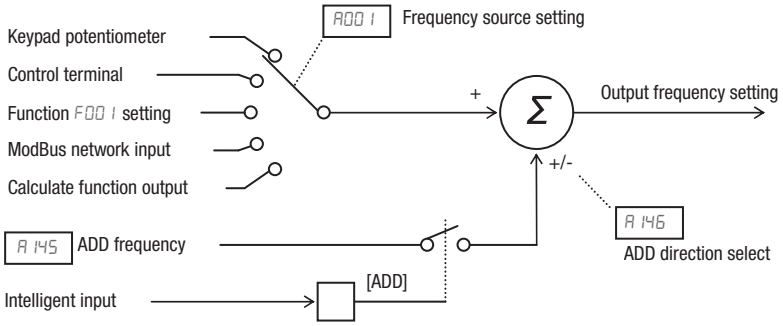

Option Code	Terminal Symbol	Function Name	State	Description
50	ADD	Frequency addition	ON	Applies the A145 Add Frequency value to the output frequency
			OFF	Does not apply the Add frequency. The output frequency retains its normal value
Valid for inputs:		C001~C007		
Required settings:		A001, A145, A146		
Notes: • A001 may specify any source; the Add Frequency will be added to or subtracted from that value to yield output frequency value.				

4-5-19 Forced Terminal Block

The purpose of this intelligent input is to allow a device to force the inverter to allow control of the following two parameters via the control terminals:

- A001 – Frequency source setting (01 = control terminals [O] or [OI])
- A002 – Run command source setting (01 = control terminals [FW] and [RW])

Some applications will require one or both settings above to use a source other than the terminals. You may prefer to normally use the inverter's keypad and potentiometer, or to use the ModBus network for control, for example. However, an external device can turn ON the [F-TM] input to force the inverter to (temporarily) allow control (frequency source and Run command) via control terminals. When the [F-TM] input is OFF, then the inverter uses the regular sources specified by A001 and A002 again.

Option Code	Terminal Symbol	Function Name	State	Description
51	F-TM	Forced terminal block	ON	Forces A001=01 (frequency source setting = control terminal), and A002=01 (Run command source setting = control terminal)
			OFF	Inverter applies the user setting for A001 and A002 normally
Valid for inputs:		C001~C007		
Required settings:				
Notes: • When changing the [F-TM] state during Run Mode (inverter is driving the motor), the inverter will stop the motor before the new [F-TM] state takes effect.				

4-5-20 Torque Command Input Permission

This function is to permit the torque command input. (Please refer to chapter 3 for the detailed description of the function.)

Option Code	Terminal Symbol	Function Name	State	Description
52	ATR	Torque command input permission	ON	Inverter is ready to accept the torque command.
			OFF	Inverter is in a normal mode.
Valid for inputs:		C001~C007		
Required settings:				

4-5-21 Integrated Power Clear

This function is to clear the cumulative input power data.

Option Code	Terminal Symbol	Function Name	State	Description
53	KHC	Integrated power clear	ON	Clear the cumulative power data
			OFF	Does not clear the data
Valid for inputs:		C001~C007		
Required settings:				

4-5-22 Drive Programming Input 1 to 7

These functions are used with Drive Programming function. Refer to a description of Drive Programming for the details.

Option Code	Terminal Symbol	Function Name	State	Description
56~62	MI1~MI7	Drive programming input 1 to 7	ON	General purpose input is made ON
			OFF	General purpose input is made OFF
Valid for inputs:		C001~C007		
Required settings:				

4-5-23 Analog Command Held

This function allows you to make the inverter held the analog command input via the external analog input terminal when the AHD terminal is made ON.

While the AHD is turned ON, the up/down function can be used based on the analog signal held by this function as reference data.

When "01" is specified for Up/down memory mode selection (C101), the result of up/down processing can be stored in memory.

If the inverter power is turned on or the RS terminal turned off with the AHD terminal left turned on, the data held immediately before power on or turning off the RS terminal will be used.

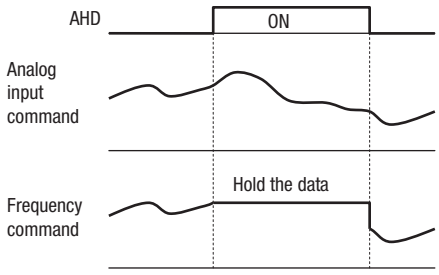

Note Set frequency remains when the inverter is switched with SET terminal with AHD on. Turn AHD terminal off to re-hold the set frequency.

Note Frequent use of this function may result in a shorter in memory component of the inverter.

Option Code	Terminal Symbol	Function Name	State	Description
65	AHD	Analog command held	ON	Hold the analog input value
			OFF	Does not hold the analog input value
Valid for inputs:		C001~C007		
Required settings:				

4-5-24 Position Command Selection 1 to 3

When "66 (CP1)" to "68 (CP3)" are assigned to input terminals, you can select position settings from multistage positions 0 to 7.

Use multistage position settings 0 to 7 (P060 to P067) for the position settings. If no position settings are assigned to terminals, multistage position 0 (P060) is assumed.

Position setting	Parameter	CP3	CP2	CP1
Multi-step position command 0	P060	0	0	0
Multi-step position command 1	P061	0	0	1
Multi-step position command 2	P062	0	1	0
Multi-step position command 3	P063	0	1	1
Multi-step position command 4	P064	1	0	0
Multi-step position command 5	P065	1	0	1
Multi-step position command 6	P066	1	1	0
Multi-step position command 7	P067	1	1	1

You can specify a delay to be applied at multistage position setting input, until the relevant terminal input is determined. Use this specification to prevent the application of fluctuating terminal input before it is determined.

You can adjust the determination time with the multistage speed/position determination time setting (C169). The input data is finally determined when the terminal input becomes stable after the delay set as C169. (Note that a long determination time deteriorates the input terminal response.)

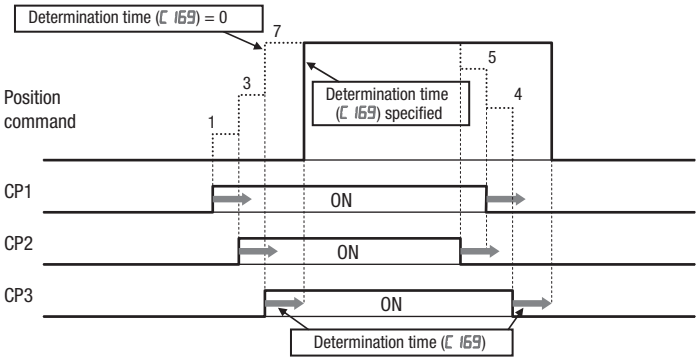

Option Code	Terminal Symbol	Function Name	State	Description
66~68	CP1~CP3	Position command selection 1 to 3	ON	Multistage position is defined by combination of the inputs.
			OFF	
Valid for inputs:		C001~C007		
Required settings:		P060~P067		

4-5-25 Limit signal of homing, Trigger signal of zero-return

These functions are used for homing performance.

One of three types of homing operations can be selected by homing mode selection (**P068**). When a homing operation ends, the current position counter is cleared (to 0). Use homing direction selection (**P069**) to select the direction of homing operation. If homing operation is not performed, position control is performed based on the assumption that the motor position detected at power-on is the origin.

<1> Low speed homing (P068=00)

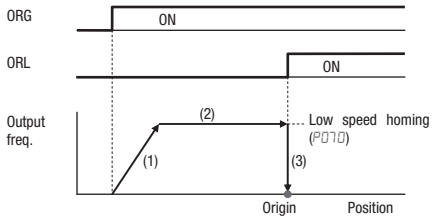

1. The inverter accelerates the motor for the specified ramp time to the low speed homing.
2. It runs the motor at the low speed homing.
3. It performs positioning when the ORL signal is given.

<2> High speed homing (P068=01)

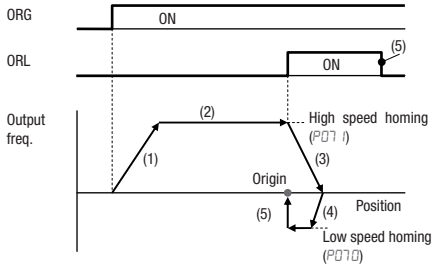

1. The inverter accelerates the motor for the specified ramp time to the high speed homing.
2. It runs the motor at the high speed homing.
3. It starts deceleration when the ORL signal is turned on.
4. It runs the motor in the reverse direction at the low speed homing.
5. It performs positioning when the ORL signal is turned off.

4-5-26 Speed/position switching

To perform speed control operation in absolute position control mode, turn on the SPD terminal. While the SPD terminal is off, the current position count remains at 0. Therefore if the SPD terminal is turned off during operation, the control operation is switched to position control operation based on the position where the terminal is turned off. (Speed control operation is switched to position control operation.)

If the position setting is 0 at this time, the inverter stops the motor at that position. (Hunting may occur if a certain position loop gain value has been set.)

While the SPD terminal is on, the rotating direction depends on the operation command. When switching from speed control to position control, pay attention to the sign of the value set in the operation command.

Option Code	Terminal Symbol	Function Name	State	Description
73	SPD	Speed/ position switching	ON	Inverter is in a speed control mode
			OFF	Inverter is in a position control mode
Valid for inputs:		C001~C007		
Required settings:				

4-5-27 Safe Stop Related Signals

Option Code	Terminal Symbol	Function Name	State	Description
77	STO1	Safety related signals	ON	
78	STO2			
79	SS1		OFF	
80	SS2			
Refer to Safety in Appendix				

4-5-28 Drive Program Start

Option Code	Terminal Symbol	Function Name	State	Description
82	PRG	Drive program start	ON	
			OFF	
Refer to Drive Programming section				

4-5-29 Retain output frequency

This function allows you to retain output frequency.

Option Code	Terminal Symbol	Function Name	State	Description
03	HLD	Retain output frequency	ON	
			OFF	
Valid for inputs:		C001~C007		
Required settings:				

4-5-30 Permission of Run command

This function allows you to accept run command.

Option Code	Terminal Symbol	Function Name	State	Description
04	ROK	Permission of Run command	ON	Run command can be accepted
			OFF	Run command is ignored
Valid for inputs:		C001~C007		
Required settings:				

4-5-31 Rotation direction detection

Input terminal (7) is for inputting “B pulse”, which is used for detecting the rotation direction.

Option Code	Terminal Symbol	Function Name	State	Description
05	EB	Rotation direction detection	ON	
			OFF	
Valid for inputs:		C007		
Required settings:				
Notes: • EB input terminal is dedicated terminal (7). • Maximum allowable input frequency is 2kHz.				

4-5-32 Display limitation

This function is to show only the contents of d001 display.

Option Code	Terminal Symbol	Function Name	State	Description
06	DISP	Display limitation	ON	
			OFF	
Valid for inputs:		C001~C007		
Required settings:				

4-5-33 Preset position

P083 value is set to current position.

Option Code	Terminal Symbol	Function Name	State	Description
51	PSET	Preset position	ON	
			OFF	
Valid for inputs:		C001~C007		
Required settings:				

4-6 Using Intelligent Output Terminals

The intelligent output terminals are programmable in a similar way to the intelligent input terminals. The inverter has several output functions that you can assign individually to two physical logic outputs. One of the outputs is an open-collector transistor, and the other output is the alarm relay (form C – normally open and normally closed contacts). The relay is assigned the alarm function by default, but you can assign it to any of the functions that the open-collector output uses.

4-6-1 Sinking Outputs, Open Collector

The open-collector transistor output can handle up to 50 mA. We highly recommend that you use an external power source as shown at the right. It must be capable of providing at least 50 mA to drive the output at full load. To drive loads that require more than 50 mA, use external relay circuits as shown below right.

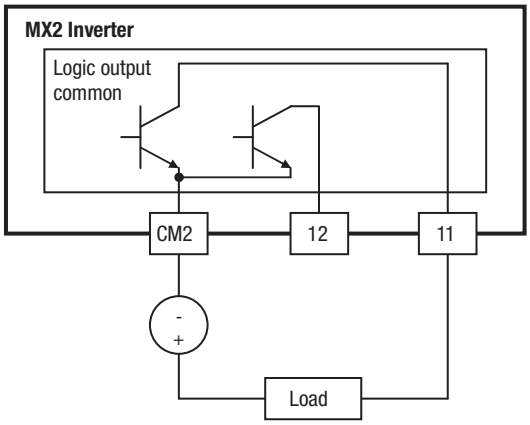

4-6-2 Sinking Outputs, Open Collector

If you need output current greater than 50 mA, use the inverter output to drive a small relay. Be sure to use a diode across the coil of the relay as shown (reverse-biased) in order to suppress the turn-off spike, or use a solid-state relay.

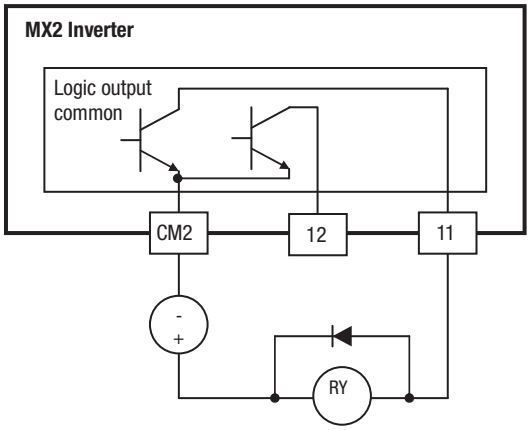

4-6-3 Internal Relay Output

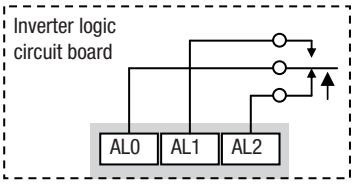

The inverter has an internal relay output with normally open and normally closed contacts (Type 1 form C). The output signal that controls the relay is configurable; the Alarm Signal is the default setting. Thus, the terminals are labeled [AL0], [AL1], [AL2], as shown to the right. However, you can assign any one of the nine intelligent outputs to the relay. For wiring purposes, the general terminal functions are:

- [AL0] – Common contact
- [AL1] – Normally open contact
- [AL2] – Normally closed contact

The relay itself can be configured as “normally open or closed.” Parameter C036, Alarm Relay Active State, is the setting. This setting determines whether or not the relay coil is energized when its output signal is OFF:

- C036=00 – “Normally open” (relay coil is de-energized when output signal is OFF)
- C036=01 – “Normally closed” (relay coil is energized when the output signal is OFF)

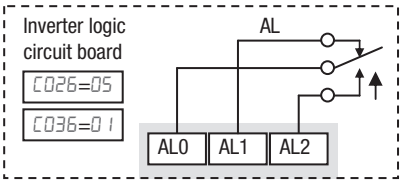

Relay shown with inverter power ON, Alarm Signal OFF

Since the relay already has normally open [AL1] and normally closed [AL2] contacts, the purpose of the ability to invert the relay coil's active state may not be obvious. It allows you to determine whether or not an inverter power loss causes the relay to change state. The default relay configuration is the Alarm Signal (C026=05), as shown to the right. And, C036=01 sets the relay to “normally closed” (relay coil normally energized). The reason for this is that a typical system design will require an inverter power loss to assert an alarm signal to external devices.

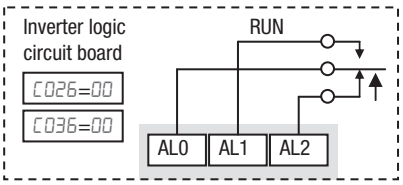

Relay shown with inverter power ON, Run Signal OFF

The relay can be used for other intelligent output signals, such as the Run Signal (set C026=00). For these remaining output signal types, the relay coil typically must NOT change state upon inverter power loss (set C036=00). The figure to the right shows the relay settings for the Run Signal output.

If you assign the relay an output signal other than the Alarm Signal, the inverter can still have an Alarm Signal output. In this case, you can assign it to terminal [11] , providing an open collector output.

4-6-4 Output Signal ON/OFF Delay Function

Intelligent outputs including terminals [11], and the output relay, have configurable signal transition delays. Each output can delay either the OFF-to-ON or ON-to-OFF transitions, or both. Signal transition delays are variable from 0.1 to 100.0 seconds. This feature is useful in applications that must tailor inverter output signals to meet timing requirements of certain external devices.

The timing diagram below shows a sample output signal (top line) and the results of various ON/OFF delay configurations.

- **Original signal** – This example signal waveform consists of three separate pulses named “A,” ““B,” and “C.”
- **..with ON delay** – Pulse A is delayed by the duration of the ON delay time. Pulses B and C do not appear at the output, because they are shorter than the ON delay.
- **...with OFF delay** – Pulse A is lengthened by the amount of the OFF delay time. The separation between pulses B and C does not appear at the output, because it is shorter than the OFF delay time.
- **...with ON/OFF delays** – Pulse A is delayed on both leading and trailing edges by the amounts of the ON and OFF delay times, respectively. Pulses B and C do not appear at the output, because they are shorter than the ON delay time.

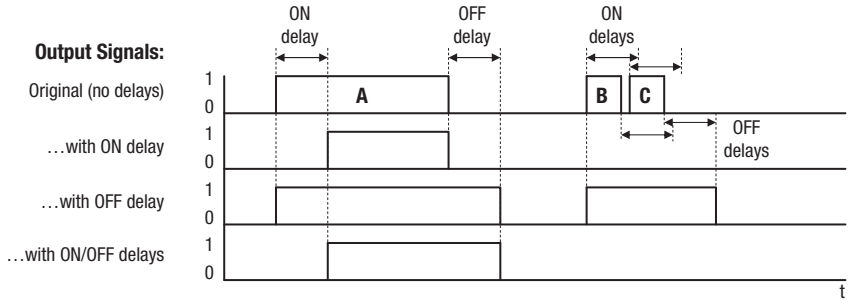

Func.	Description	Range	Default
C130	Output 11 ON delay	0.0 to 100.0 sec.	0.0
C131	Output 11 OFF delay	0.0 to 100.0 sec.	0.0
C132	Output 12 ON delay	0.0 to 100.0 sec.	0.0
C133	Output 12 OFF delay	0.0 to 100.0 sec.	0.0
C140	Relay output ON delay	0.0 to 100.0 sec.	0.0
C141	Relay output OFF delay	0.0 to 100.0 sec.	0.0

Use of the ON/OFF signal delay functions are optional. Note that any of the intelligent output assignments in this section can be combined with ON/OFF signal timing delay configurations.

4-6-5 Run Signal

When the [RUN] signal is selected as an intelligent output terminal, the inverter outputs a signal on that terminal when it is in Run Mode. The output logic is active low, and is the open collector type (switch to ground).

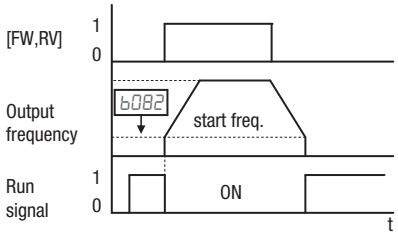

Option Code	Terminal Symbol	Function Name	State	Description
00	RUN	Run Signal	ON	when inverter is in Run Mode
			OFF	when inverter is in Stop Mode
Valid for inputs:		11, 12, AL0 - AL2		Example for terminal [11] (default output configuration shown – see page 158):
Required settings:		(none)		

Notes:

- The inverter outputs the [RUN] signal whenever the inverter output exceeds the start frequency specified by parameter b082. The start frequency is the initial inverter output frequency when it turns ON.
- The example circuit for terminal [11] drives a relay coil. Note the use of a diode to prevent the negative going turn-off spike generated by the coil from damaging the inverter's output transistor.

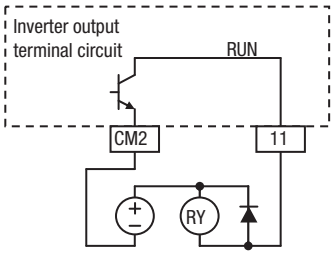

Example for terminal [AL0], [AL1], [AL2] (requires output configuration – see page 226 and page 158):

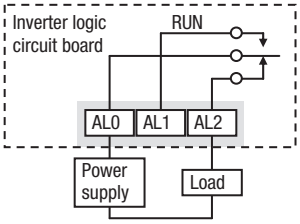

See I/O specs on page 195

4-6-6 Frequency Arrival Signals

The *Frequency Arrival* group of outputs helps coordinate external systems with the current velocity profile of the inverter. As the name implies, output [FA1] turns ON when the output *frequency arrives* at the standard set frequency (parameter F001). Output [FA2] relies on programmable accel/ decel thresholds for increased flexibility. For example, you can have an output turn ON at one frequency during acceleration, and have it turn OFF at a different frequency during deceleration. All transitions have hysteresis to avoid output chatter if the output frequency is near one of the thresholds.

Option Code	Terminal Symbol	Function Name	State	Description
01	FA1	Constant speed arrival signal	ON	when output to motor is at the constant frequency
			OFF	when output to motor is OFF, or in any acceleration or deceleration ramp
02	FA2	Over set frequency arrival signal	ON	when output to motor is at or above the set frequency thresholds for, even if in acceleration or decel ramps
			OFF	when output to motor is OFF, or during accel or decel before the respective thresholds are crossed
06	FA3	Set-frequency-only arrival signal	ON	when output to motor is at the set frequency
			OFF	when output to motor is OFF, or in any acceleration or deceleration ramp
24	FA4	Set frequency exceeded 2	ON	when output to motor is at or above the set frequency thresholds for, even if in acceleration or decel ramps
			OFF	when output to motor is OFF, or during accel or decel before the respective thresholds are crossed
25	FA5	Set frequency only 2	ON	when output to motor is at the set frequency
			OFF	when output to motor is OFF, or in any acceleration or deceleration ramp
Valid for inputs:		11, 12, AL0 - AL2		
Required settings:		C042, C043, C045, C046		

Notes:

- For most applications you will need to use only one type of frequency arrival outputs (see examples). However, it is possible assign both output terminals to output functions [FA1] and [FA2]
- For each frequency arrival threshold, the output anticipates the threshold (turns ON early) by 1.5 Hz
- The output turns OFF as the output frequency moves away from the threshold, delayed by 0.5 Hz
- The example circuit for terminal [11] drives a relay coil. Note the use of a diode to prevent the negative going turn-off spike generated by the coil from damaging the inverter's output transistor

Frequency arrival output [FA1] uses the standard output frequency (parameter F001) as the threshold for switching. In the figure to the right, Frequency Arrival [FA1] turns ON when the output frequency gets within *Fon* Hz below or *Fon* Hz above the target constant frequency, where *Fon* is 1% of the set maximum frequency and *Foff* is 2% of the set maximum frequency. This provides hysteresis that prevents output chatter near the threshold value. The hysteresis effect causes the output to turn ON slightly *early* as the speed approaches the threshold. Then the turn-OFF point is slightly *delayed*. Note the active low nature of the signal, due to the open collector output.

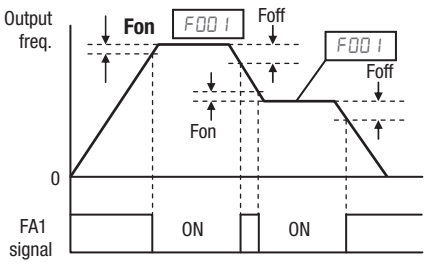

Fon = 1% of max. frequency
Foff = 2% of max. frequency

Frequency arrival output [FA2/FA4] works the same way; it just uses two separate thresholds as shown in the figure to the right. These provide for separate acceleration and deceleration thresholds to provide more flexibility than for [FA1]. [FA2/FA4] uses C042/C045 during acceleration for the ON threshold, and C043/C046 during deceleration for the OFF threshold. This signal also is active low. Having different accel and decel thresholds provides an asymmetrical output function. However, you can use equal ON and OFF thresholds, if desired.

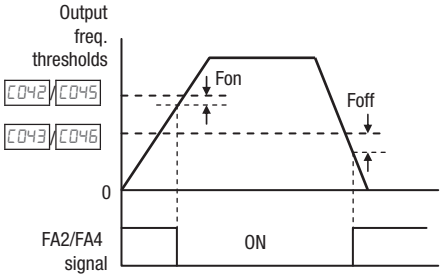

Fon = 1% of max. frequency
Foff = 2% of max. frequency

Frequency arrival output [FA3/FA5] works also the same way, only difference is arriving at set frequency.

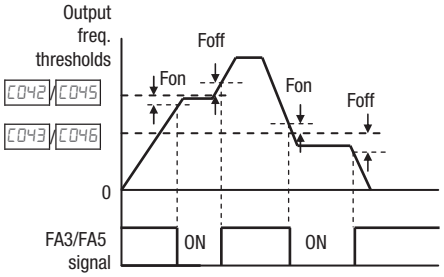

Fon = 1% of max. frequency
Foff = 2% of max. frequency

4-6-7 Overload Advance Notice Signal

When the output current exceeds a preset value, the [OL] terminal signal turns ON. The parameter C041 and C111 sets the overload threshold. (Two thresholds can be set.) The overload detection circuit operates during powered motor operation and during regenerative braking. The output circuits use open-collector transistors, and are active low.

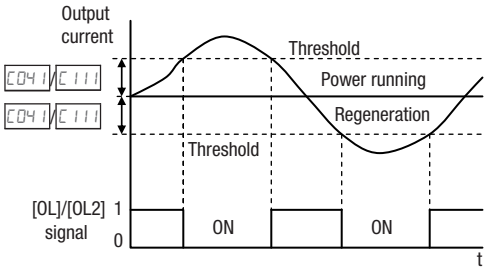

Option Code	Terminal Symbol	Function Name	State	Description
03	OL	Overload warning	ON	when output current is more than the set threshold for the overload signal
			OFF	when output current is less than the set threshold for the overload signal
26	OL2	Overload warning 2	ON	(Same as above)
			OFF	(Same as above)
Valid for inputs:		11, 12, AL0 - AL2		
Required settings:		C041, C111		

Notes:

- The default value is 100%. To change the level from the default, set C041 (overload level) and/or C111 (overload level (2)).
- The accuracy of this function is the same as the function of the output current monitor on the [FM] terminal (see *Analog Output Operation* on page 252).
- The example circuit for terminal [11] drives a relay coil. Note the use of a diode to prevent the negative-going turn-off spike generated by the coil from damaging the inverter's output transistor.

4-6-8 Excessive PID deviation

The PID loop error is defined as the magnitude (absolute value) of the difference between the Setpoint (target value) and the Process Variable (actual value). When the error magnitude exceeds the preset value for C044, the [OD] terminal signal turns ON. Refer to “PID Loop Operation” on page 109.

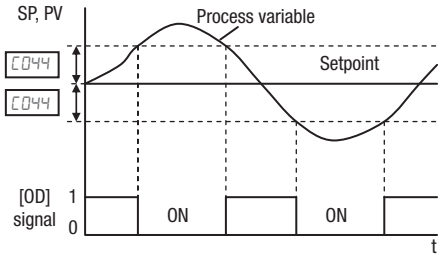

Option Code	Terminal Symbol	Function Name	State	Description
04	OD	Excessive PID deviation	ON	when PID error is more than the set threshold for the deviation signal
			OFF	when PID error is less than the set threshold for the deviation signal
Valid for inputs:		11, 12, AL0 - AL2		
Required settings:		C044		

Notes:

- The default difference value is set to 3%. To change this value, change parameter C044 (deviation level).
- The example circuit for terminal [11] drives a relay coil. Note the use of a diode to prevent the negative-going turn-off spike generated by the coil from damaging the inverter's output transistor.

4-6-9 Alarm Output

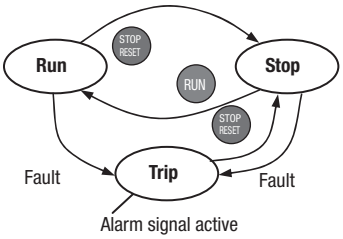

The inverter alarm signal is active when a fault has occurred and it is in the Trip Mode (refer to the diagram at right). When the fault is cleared the alarm signal becomes inactive.

We must make a distinction between the alarm *signal* AL and the alarm relay *contacts* [AL0], [AL1] and [AL2]. The signal AL is a logic function, which you can assign to the open collector output terminals [11], [12], or the relay outputs.

The most common (and default) use of the relay is for AL, thus the labeling of its terminals. Use an open collector output (terminal [11] or [12]) for a low-current logic signal interface or to energize a small relay (50 mA maximum). Use the relay output to interface to higher voltage and current devices (10 mA minimum).

Option Code	Terminal Symbol	Function Name	State	Description
05	AL	Alarm output	ON	when an alarm signal has occurred and has not been cleared
			OFF	when no alarm has occurred since the last clearing of alarm(s)
Valid for inputs:		11, 12, AL0 - AL2		
Required settings:		C031, C032, C036		

Notes:

- By default, the relay is configured as normally closed (C036=01). Refer to the next page for an explanation.
- In the default relay configuration, an inverter power loss turns ON the alarm output. the alarm signal remains ON as long as the external control circuit has power.
- When the relay output is set to normally closed, a time delay of less than 2 seconds occurs after powerup before the contact is closed.
- Terminals [11] and [12] are open collector outputs, so the electric specifications of [AL] are different from the contact output terminals [AL0], [AL1], [AL2].
- This signal output has the delay time (300 ms nominal) from the fault alarm output.
- The relay contact specifications are in 4-3 *Control Logic Signal Specifications* on page 195. The contact diagrams for different conditions are on the next page.

The alarm relay output can be configured in two main ways:

- Trip/Power Loss Alarm - The alarm relay is configured as normally closed (C036=01) by default, shown below (left). An external alarm circuit that detects broken wiring also as an alarm connects to [AL0] and [AL1]. After powerup and short delay (< 2 seconds), the relay energizes and the alarm circuit is OFF. Then, either an inverter trip event or an inverter power loss will de-energize the relay and open the alarm circuit
- Trip Alarm - Alternatively, you can configure the relay as normally open (C036=00), shown below (right). An external alarm circuit that detects broken wiring also as an alarm connects to [AL0] and [AL2]. After powerup, the relay energizes only when an inverter trip event occurs, opening the alarm circuit. However, in this configuration, an inverter power loss does not open the alarm circuit.

Be sure to use the relay configuration that is appropriate for your system design. Note that the external circuits shown assume that a closed circuit = no alarm condition (so that a broken wire also causes an alarm). However, some systems may require a closed circuit = alarm condition. In that case, then use the opposite terminal [AL1] or [AL2] from the ones shown.

N.C. contacts (C036=01)

During normal operation

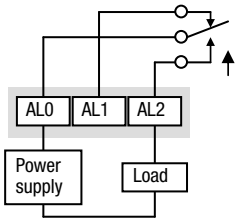

When an alarm occurs or when power is OFF

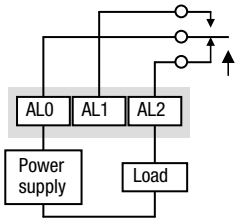

Power	Run Mode	AL0-AL1	AL0-AL2
ON	Normal	Closed	Open
ON	Trip	Open	Closed
OFF	–	Open	Closed

N.O. contacts (C036=00)

During normal operation or when power is OFF

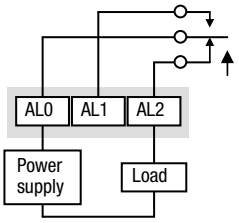

When an alarm occurs

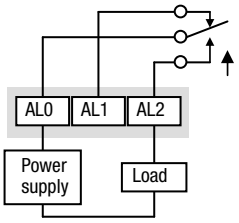

Power	Run Mode	AL0-AL1	AL0-AL2
ON	Normal	Open	Closed
ON	Trip	Closed	Open
OFF	–	Open	Closed

4-6-10 Overtorque

The inverter outputs the over torque signal when it detects that the estimated motor output torque exceeds the specified level.

To enable this function, assign "07 (OTQ)" to an intelligent output terminal.

Option Code	Terminal Symbol	Function Name	State	Description
07	OTQ	Overtorque	ON	when the estimated output torque > C055~C058
			OFF	when no over torque is detected
Valid for inputs:		11, 12, AL0 - AL2		
Required settings:		A044=03 or 04, C055~C058		
Notes: • This function is effective only when the V/F characteristic curve selection A044 is set to "03 (SLV mode)". With any other V/F characteristic curve selection, the output of the OTQ signal is unpredictable. • When using the inverter for a lift, use the OTQ signal as the trigger to stop braking. Use the frequency arrival signal as the trigger to start braking. • The example circuit for terminal [11] drives a relay coil. Note the use of a diode to prevent the negative-going turn-off spike generated by the coil from damaging the inverter's output transistor.				

4-6-11 Signal during Undervoltage

The inverter outputs the undervoltage signal when it detects that the inverter is in undervoltage situation.

To enable this function, assign "09 (UV)" to an intelligent output terminal.

Option Code	Terminal Symbol	Function Name	State	Description
09	UV	Signal during undervoltage	ON	Inverter is in undervoltage
			OFF	Inverter is in normal condition
Valid for inputs:		11, 12, AL0 - AL2		
Required settings:				
Notes: • The example circuit for terminal [11] drives a relay coil. Note the use of a diode to prevent the negative-going turn-off spike generated by the coil from damaging the inverter's output transistor.				

4-6-12 Torque Limit

The inverter outputs the torque limited signal when it is in torque limit operation.

To enable this function, assign " 10 (TRQ)" to an intelligent output terminal.

Refer to SECTION 3 *Configuring Drive Parameters* on page 69 for detailed explanation.

Option Code	Terminal Symbol	Function Name	State	Description
10	TRQ	Torque limit	ON	Inverter is in torque limiting mode
			OFF	Inverter is not in torque limiting mode
Valid for inputs:		11, 12, AL0 - AL2		
Required settings:		A044=03, b040~b044		
Notes: • The example circuit for terminal [11] drives a relay coil. Note the use of a diode to prevent the negative-going turn-off spike generated by the coil from damaging the inverter's output transistor.				

4-6-13 Running Time and Power On Time Over Signal

The inverter outputs the operation time expiration signal and power on time expiration signal.

To enable this function, assign " 11 (RNT)", and/or " 12 (ONT)" to intelligent output terminals.

Option Code	Terminal Symbol	Function Name	State	Description
11	RNT	RUN time over	ON	Accumulated operation time of the inverter exceeds the set value of b034
			OFF	Accumulated operation time of the inverter does not exceed the set value of b034
12	ONT	Power ON time over	ON	Accumulated power on time of the inverter exceeds the set value of b034
			OFF	Accumulated power on time of the inverter does not exceed the set value of b034
Valid for inputs:		11, 12, AL0 - AL2		
Required settings:		b034		
Notes: • The example circuit for terminal [11] drives a relay coil. Note the use of a diode to prevent the negative-going turn-off spike generated by the coil from damaging the inverter's output transistor.				

4-6-14 Thermal Warning

You can configure this function so that the inverter outputs a warning signal before the electronic thermal protection operates against motor overheat. You can also set the threshold level to output a warning signal with the electronic thermal warning level setting (C061).

To output the warning signal, assign function "13 (THM)" to one of the intelligent output terminals [11] to [12], or to the relay output terminal.

Option Code	Terminal Symbol	Function Name	State	Description
13	THM	Thermal warning	ON	Accumulated thermal level exceeds the electronic thermal warning level (C061)
			OFF	Accumulated thermal level does not exceed the electronic thermal warning level (C061)
Valid for inputs:		11, 12, AL0 - AL2		
Required settings:		C061		
Notes: • The example circuit for terminal [11] drives a relay coil. Note the use of a diode to prevent the negative-going turn-off spike generated by the coil from damaging the inverter's output transistor.				

4-6-15 External Brake Related Output Signals

These signals are used with brake control function.

To output the warning signals, assign function "19 (BRK)" and "20 (BER)" to the intelligent output terminals [11] and [12], or to the relay output terminal.

Refer to SECTION 3 *Configuring Drive Parameters* on page 69 detailed explanation of the brake control function.

Option Code	Terminal Symbol	Function Name	State	Description
19	BRK	Brake release	ON	Brake is ready to be released
			OFF	Brake is not ready to be released
20	BER	Brake error	ON	Brake error has occurred
			OFF	Brake is working properly
Valid for inputs:		11, 12, AL0 - AL2		
Required settings:		b120~b127		
Notes: • The example circuit for terminal [11] drives a relay coil. Note the use of a diode to prevent the negative-going turn-off spike generated by the coil from damaging the inverter's output transistor.				

4-6-16 0 Hz Signal

The inverter outputs the 0Hz speed detection signal when the inverter output frequency falls below the threshold level (C063).

To use this function, assign “21 (ZS)” to one of the intelligent output terminals.

Option Code	Terminal Symbol	Function Name	State	Description
21	ZS	0 Hz signal	ON	Output frequency is less than C063
			OFF	Output frequency is not less than C063
Valid for inputs:		11, 12, AL0 - AL2		
Required settings:		C063		

Notes:

- The example circuit for terminal [11] drives a relay coil. Note the use of a diode to prevent the negative-going turn-off spike generated by the coil from damaging the inverter's output transistor.

4-6-17 Excessive Speed Deviation

The inverter outputs the detection signal when the deviation between the set speed and actual motor speed becomes less the threshold level (P027). This function is valid when connecting the encoder feedback to the inverter.

To use this function, assign "22 (DSE)" to one of the intelligent output terminals.

Option Code	Terminal Symbol	Function Name	State	Description
22	DSE	Excessive speed deviation	ON	Deviation between the speed command and motor speed is less than P027
			OFF	Deviation between the speed command and motor speed exceeds P027
Valid for inputs:		11, 12, AL0 - AL2		
Required settings:		P027		
Notes: • The example circuit for terminal [11] drives a relay coil. Note the use of a diode to prevent the negative-going turn-off spike generated by the coil from damaging the inverter's output transistor.				

4-6-18 Position Ready

Inverter gives out the positioning signal when positioning performance is done.

To use this function, assign "23 (POK)" to one of the intelligent output terminals.

Refer to chapter 4 for the details of the performance.

Option Code	Terminal Symbol	Function Name	State	Description
23	POK	Position ready	ON	Positioning performance is completed
			OFF	Positioning performance is not completed
Valid for inputs:		11, 12, AL0 - AL2		
Required settings:		P0 103~P0 15		
Notes: • The example circuit for terminal [11] drives a relay coil. Note the use of a diode to prevent the negative-going turn-off spike generated by the coil from damaging the inverter's output transistor.				

4-6-19 Analog Input Disconnection Detection

This feature is useful when the inverter receives a speed reference from an external device. Upon input signal loss at either the [O] or [OI] terminal, the inverter normally just decelerates the motor to a stop. However, the inverter can use the intelligent output terminal [Dc] to signal other devices that a signal loss has occurred.

Voltage signal loss at [O] terminal – Parameter b082 is the Start Frequency Adjustment. It sets the beginning (minimum) output frequency when the speed reference source is greater than zero. If the analog input at terminal [O] is less than the Start Frequency, the inverter turns ON the [Dc] output to indicate a signal loss condition.

Current signal loss at [OI] terminal – The [OI] terminal accepts a 4 mA to 20 mA signal, with 4 mA representing the beginning of the input range. If the input current falls below 4 mA, the inverter applies a threshold to detect signal loss.

Note that a signal loss is not an inverter trip event. When the analog input value is again above the b082 value, the [Dc] output turns OFF. There is no error condition to clear.

Option Code	Terminal Symbol	Function Name	State	Description
27	ODc	Analog O disconnection detection	ON	when signal loss is detected on [O] input
			OFF	when no signal loss is detected on [O] input
28	OIDc	Analog OI disconnection detection	ON	when signal loss is detected on [OI] input
			OFF	when no signal loss is detected on [OI] input
Valid for inputs:		11, 12, AL0 - AL2		
Required settings:		A001=01, b082		

Notes:

- The [Dc] output can indicate an analog signal disconnect when the inverter is in Stop Mode, as well as Run Mode.
- The example circuit for terminal [11] drives a relay coil. Note the use of a diode to prevent the negative-going turn-off spike generated by the coil from damaging the inverter's output transistor.

4-6-20 PID FB Status Output

The inverter has a built-in PID loop feature for *two-stage control*, useful for certain applications such as building ventilation or heating and cooling (HVAC). In an ideal control environment, a single PID loop controller (stage) would be adequate. However, in certain conditions, the maximum output energy from the first stage is not enough to maintain the Process Variable (PV) at or near the Setpoint (SP). And, the output of the first stage is in saturation. A simple solution is to add a second stage, which puts an additional and constant amount of energy into the system under control. When size properly, the boost from the second stage brings the PV toward the desired range, allowing the first stage PID control to return to its linear range of operation.

The two-stage method of control has some advantages for particular applications.

- The second stage is only ON in adverse conditions, so there is an energy savings during normal conditions.
- Since the second stage is simple ON/OFF control, it is less expensive to add than just duplicating the first stage.
- At powerup, the boost provided by the second stage helps the process variable reach the desired setpoint sooner than it would if the first stage acted alone.
- Even though the second stage is simple ON/OFF control, when it is an inverter you can still adjust the output frequency to vary the boost it provides.

Refer to the example diagram below. Its two stages of control are defined as follows:

- Stage 1 - Inverter #1 operating in PID loop mode, with motor driving a fan
- Stage 2 - Inverter #2 operating as an ON/OFF controller, with motor driving a fan

Stage #1 provides the ventilation needs in a building most of the time. On some days, there is a change in the building's air volume because large warehouse doors are open. In that situation, Stage #1 alone cannot maintain the desired air flow (PV sags under SP). Inverter #1 senses the low PV and its PID Second Stage Output at [FBV] terminal turns ON. This gives a Run FWD command to Inverter #2 to provide the additional air flow.

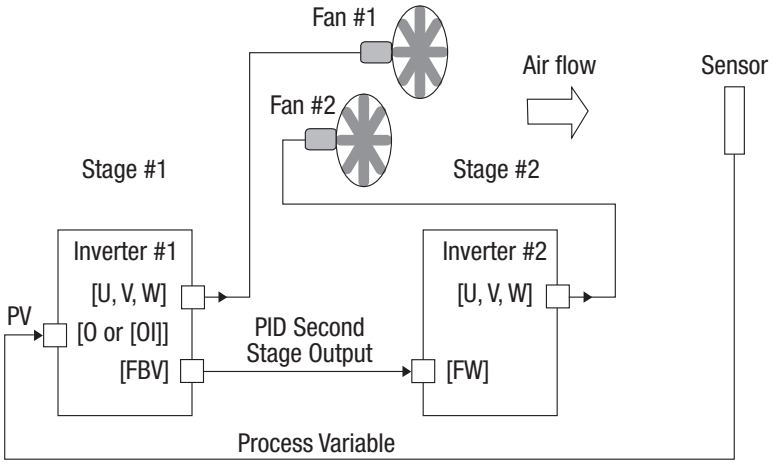

To use the PID Second Stage Output feature, you will need to choose upper and lower limits for the PV, via C053 and C052 respectively. As the timing diagram below shows, these are the thresholds Stage #1 inverter uses to turn ON or OFF Stage #2 inverter via the [FBV] output. The vertical axis units are percent (%) for the PID setpoint, and for the upper and lower limits. The output frequency, in Hz, is superimposed onto the same diagram.

When the system control begins, the following events occur (in sequence in the timing diagram):

1. Stage #1 inverter turns ON via the [FW] Run command.
2. Stage #1 inverter turns ON the [FBV] output, because the PV is below the PV low limit C053. So, Stage #2 is assisting in loop error correction from the beginning.
3. The PV rises and eventually exceeds the PV high limit C052. Stage #1 inverter then turns OFF the [FBV] output to Stage #2, since the boost is no longer needed.
4. When the PV begins decreasing, only Stage #1 is operating, and it is in the linear control range. This region is where a properly configured system will operate most often.
5. The PV continues to decrease until it crosses under the PV low limit (apparent external process disturbance). Stage #1 inverter turns ON the [FBV] output, and Stage #2 inverter is assisting again.
6. After the PV rises above the PV low limit, the [FW] Run command to Stage #1 inverter turns OFF (as in a system shutdown).
7. Stage #1 inverter enters Stop Mode and automatically turns OFF the [FBV] output, which causes Stage #2 inverter to also stop.

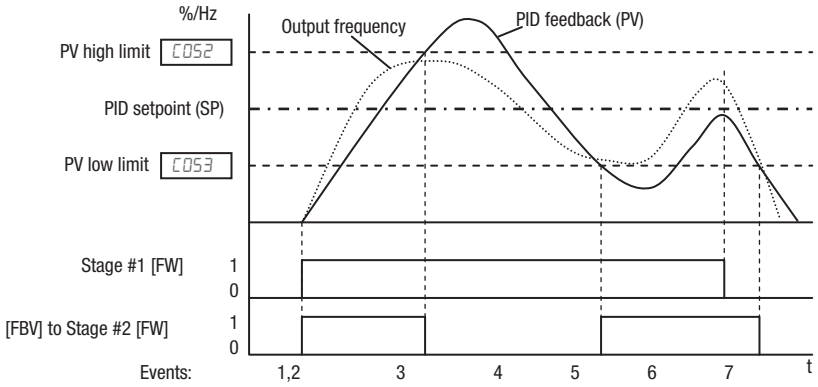

The terminal [FBV] configuration table is on the following page.

Option Code	Terminal Symbol	Function Name	State	Description
31	FBV	PID FB status output	ON	• Transitions to ON when the inverter is in RUN Mode and the PID Process Variable (PV) is less than the Feedback Low Limit (C053)
			OFF	• Transitions to OFF when the PID Feedback Value (PV) exceeds the PID High Limit (C052) • Transitions to OFF when the inverter goes from Run Mode to Stop Mode
Valid for inputs:		11, 12, AL0 - AL2		
Required settings:		A076, C052, C053		
Notes: • The [FBV] is designed for implementing two-stage control. The PV high limit and PV low limit parameters, C052 and C053, do not function as process alarm thresholds. Terminal [FBV] does not provide a PID alarm function. • The example circuit for terminal [11] drives a relay coil. Note the use of a diode to prevent the negative-going turn-off spike generated by the coil from damaging the inverter's output transistor.				

4-6-21 Network Error

This signal function is enabled only when ModBus-RTU has been selected for the communication. If a reception timeout occurs, the inverter continues to output the communication line disconnection signal until it receives the next data.

Specify the limit time for reception timeout by setting the communication trip time (C077).

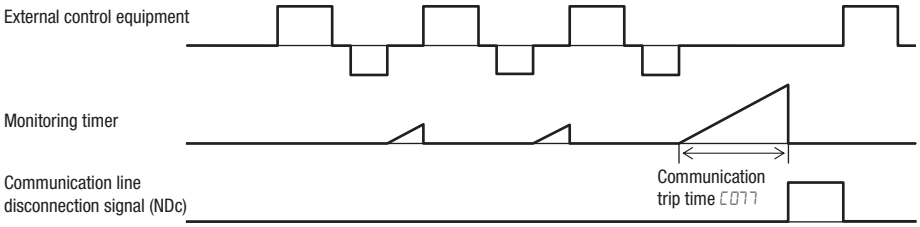

Option Code	Terminal Symbol	Function Name	State	Description
32	NDc	Network error	ON	When there is a disconnection in communiciation
			OFF	When there is no disconnection in communiciation
Valid for inputs:		11, 12, AL0 - AL2		
Required settings:		C077		
Notes: • The example circuit for terminal [11] drives a relay coil. Note the use of a diode to prevent the negative-going turn-off spike generated by the coil from damaging the inverter's output transistor.				

4-6-22 Logic Operation Outputs

The inverter has a built-in logic output feature. Select any two operands out of all intelligent output options except LOG1~LOG3 and their operator out of AND, OR, or XOR (exclusive OR). The terminal symbol for the new output is [LOG]. Use C021, C022 or C026 to route the logical result to terminal [11], [12] or the relay terminals.

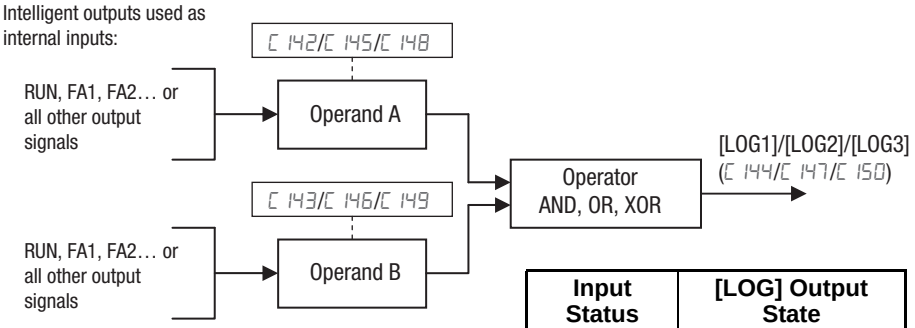

Input Status		[LOG] Output State		
A	**B**	**AND**	**OR**	**XOR**
0	0	0	0	0
0	1	0	1	1
1	0	0	1	1
1	1	1	1	0

Option Code	Terminal Symbol	Function Name	State	Description
33 34 35	LOG1 LOG2 LOG3	Logic operation outputs	ON	when the Boolean operation specified by C144/C145/C147 has a logical “1” result
			OFF	when the Boolean operation specified by C144/C145/C147 has a logical “0” result
Valid for inputs:		11, 12, AL0 - AL2		
Required settings:		C141~C150		

4-6-23 Life time Warning Output Function

Capacitor life warning signal – The inverter checks the operating life of the capacitors on the internal circuit board on the basis of the internal temperature and cumulative power on time. You can also monitor the state of the capacitor life warning signal (WAC) in d022. If the WAC signal is given out, it is recommended to replace the main PCB and control PCB.

Cooling fan warning signal – If the signal is given out, check the cooling fan cover for clogging. You can also monitor the state of WAF signal in d022.

Option Code	Terminal Symbol	Function Name	State	Description
39	WAC	Capacitor life warning signal	ON	Calculated lifetime of the electrolytic capacitor is expired
			OFF	Electrolytic capacitor is normal
40	WAF	Cooling fan life warning signal	ON	Calculated lifetime of the cooling fan is expired
			OFF	Cooling fan is normal
Valid for inputs:		11, 12, AL0 - AL2		
Required settings:				

4-6-24 Starting Contact Signal

The inverter gives out the starting contact signal (FR) while it is receiving an operational command. The FR signal is given out, regardless the setting of the run command source setting (A002). If the forward operation (FW) and reverse operation (RV) are given at the same time, the inverter stops the motor operation.

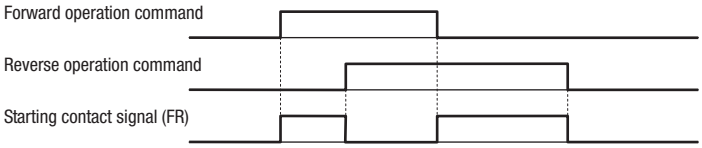

Option Code	Terminal Symbol	Function Name	State	Description
41	FR	Starting contact signal	ON	Either FW or RV is given, or no operation command is given
			OFF	Both FW and RV is given at the same time
Valid for inputs:		11, 12, AL0 - AL2		
Required settings:				

4-6-25 Fin Overheat Warning

The inverter monitors the temperature of its internal heatsink, and gives out the heat sink overheat warning signal (OHF) when the temperature exceeds the overheat warning level (C064).

Option Code	Terminal Symbol	Function Name	State	Description
42	OHF	Fin overheat warning	ON	Heat sink temperature exceeds the C064 set level
			OFF	Heat sink temperature does not exceed the C064 set level
Valid for inputs:		11, 12, AL0 - AL2		
Required settings:		C064		

4-6-26 Light Load Detection Signal

The low load detection signal output indicates the general status of the inverter output current. When the output current becomes less than the value specified by C039, the LOC output turns ON.

Option Code	Terminal Symbol	Function Name	State	Description
43	LOC	Light load detection signal	ON	When the output current becomes less than the value specified by C039
			OFF	When the output current is more than the value specified by C039
Valid for inputs:		11, 12, AL0 - AL2		
Required settings:		C038, C039		

4-6-27 Drive Programming Output 1 to 3

The functions are for Drive Programming. Refer to a manual of Drive Programming for detailed description.

Option Code	Terminal Symbol	Function Name	State	Description
44	MO1	Drive programming output 1	ON	Each general output is turned on
			OFF	Each general output is turned off
45	MO2	Drive programming output 2		
46	MO3	Drive programming output 3		
Valid for inputs:		11, 12, AL0 - AL2		
Required settings:				

Notes:
- Refer to a manual of Drive Programming for detailed explanation.

4-6-28 Operation Ready Signal

The inverter outputs the inverter ready signal (IRDY) when it is ready for operation (i.e. when it can receive an operational command).

Option Code	Terminal Symbol	Function Name	State	Description
50	IRDY	Operation ready signal	ON	The inverter is ready to accept the operation command
			OFF	The inverter is not ready to accept the operation command
Valid for inputs:		11, 12, AL0 - AL2		
Required settings:		C038, C039		
Notes: • The inverter can recognize only the operation command if given while the IRDY signal is given out • If the IRDY signal is not given out, check whether the input power supply voltage (connect to the R, S, and T terminals) is within the range of specification				

4-6-29 Forward and Reverse Run Signals

Forward Rotation signal – The inverter continues to output the forward rotation signal (FWR) while it is driving the motor for forward operation. The FWR signal is turned off while the inverter is driving the motor for reverse operation or stopping the motor.

Reverse Rotation signal – The inverter continues to output the reverse rotation signal (RVR) while it is driving the motor for reverse operation. The RVR signal is turned off while the inverter is driving the motor for forward operation or stopping the motor.

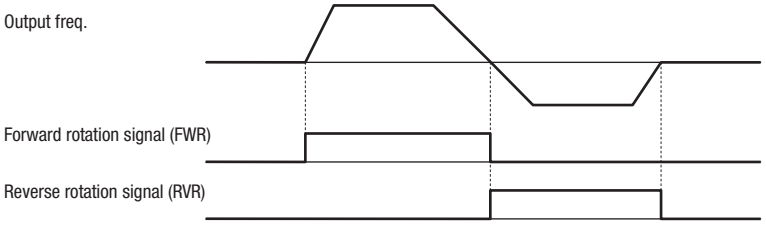

Option Code	Terminal Symbol	Function Name	State	Description
51	FWR	Forward run signal	ON	Inverter is driving the motor for forward operation
			OFF	Inverter is driving the motor for reverse operation, or the motor is stopped
52	RVR	Reverse run signal	ON	Inverter is driving the motor for reverse operation
			OFF	Inverter is driving the motor for forward operation, or the motor is stopped
Valid for inputs:		11, 12, AL0 - AL2		
Required settings:				

4-6-30 Fatal Fault Signal

The inverter gives out the major failure signal in addition to an alarm signal when it trips because of one of the errors listed in note down below.

Option Code	Terminal Symbol	Function Name	State	Description
53	MJA	Fatal fault signal	ON	
			OFF	
Valid for inputs:		11, 12, AL0 - AL2		
Required settings:				
Notes: • The output applies to the tripping caused by hardware as shown below.				

4-6-31 Window Comparator for Analog Inputs

The window comparator function outputs signals when the value of analog inputs [O] and [OI] are within the maximum and minimum limits specified for the window comparator. You can monitor analog inputs with reference to arbitrary levels (to find input terminal disconnection and other errors).

Refer to SECTION 3 *Configuring Drive Parameters* on page 69 for detailed information.

Option Code	Terminal Symbol	Function Name	State	Description
54	WCO	Window comparator O	ON	[O] input is inside of the window comparator
			OFF	[O] input is outside of the window comparator
55	WCOI	Window comparator OI	ON	[OI] input is inside of the window comparator
			OFF	[OI] input is outside of the window comparator
Valid for inputs:		11, 12, AL0 - AL2		
Required settings:		b060~b065, b070, b071		
Notes: • Output values of ODc and OIDc are the same as those of WCO and WCOI, respectively.				

4-6-32 Frequency Command Source, Run Command Source

Option Code	Terminal Symbol	Function Name	State	Description
58	FREF	Frequency command source	ON	
			OFF	
59	REF	Run command source	ON	
			OFF	
Valid for inputs:		11, 12, AL0 - AL2		
Required settings:				

4-6-33 2nd Motor Selection

This function allows you to switch the inverter setting to control two different types of motors. To use this function, assign function "08" to one of the input terminal and make it on or off. When 2nd motor parameters are selected, output signal SETM turns on.

No.	Codes	Description
1	F202	2nd acceleration time 1
2	F203	2nd deceleration time 1
3	A201	Frequency reference selection 2nd motor
4	A202	RUN command selection 2nd motor
5	A203	2nd set base frequency
6	A204	2nd maximum frequency
7	A220	2nd multi-step speed reference 0
8	A241	2nd torque boost selection
9	A242	2nd manual torque boost voltage
10	A243	2nd manual torque boost frequency
11	A244	2nd v/f characteristics selection
12	A245	Output voltage gain, 2nd motor
13	A246	2nd automatic torque boost voltage compensation gain
14	A247	2nd automatic torque boost slip compensation gain
15	A261	2nd frequency upper limit
16	A262	2nd frequency lower limit
17	A281	AVR selection 2nd motor
18	A282	AVR voltage selection 2nd motor
19	A292	2nd acceleration time 2
20	A293	2nd deceleration time 2
21	A294	Select method to switch to Acc2/Dec2 profile, 2nd motor

No.	Codes	Description
22	A295	Acc1 to Acc2 frequency transition point, 2nd motor
23	A296	Dec1 to Dec2 frequency transition point, 2nd motor
24	C241	Overload warning level, 2nd motor
25	H202	2nd motor parameter selection
26	H203	2nd motor capacity selection
27	H204	2nd motor pole number selection
28	H205	2nd speed response
29	H206	2nd stabilization parameter
30	H220	2nd motor parameter R1
31	H221	2nd motor parameter R2
32	H222	2nd motor parameter L
33	H223	2nd motor parameter Io
34	H224	2nd motor parameter J
35	H230	2nd motor parameter R1 (auto-tuning data)
36	H231	2nd motor parameter R2 (auto-tuning data)
37	H232	2nd motor parameter L (auto-tuning data)
38	H233	2nd motor parameter Io (auto-tuning data)
39	H234	2nd motor parameter J (auto-tuning data)

Option Code	Terminal Symbol	Function Name	State	Description
60	SETM	2nd motor selection	ON	2nd motor parameter sets are selected
			OFF	1st motor parameter sets are selected
Valid for inputs:		11, 12, AL0 - AL2		
Required settings:				

4-6-34 STO (Safe Torque Off) Performance Monitor

This signal is specific for Safe Stop function.

Option Code	Terminal Symbol	Function Name	State	Description
62	EDM	STO (Safe Torque Off) Performance Monitor (Output terminal 11 only)	ON	
			OFF	

Option Code	Terminal Symbol	Function Name	State	Description
Valid for inputs:		11		Dedicated to terminal [11]:
Required settings:				

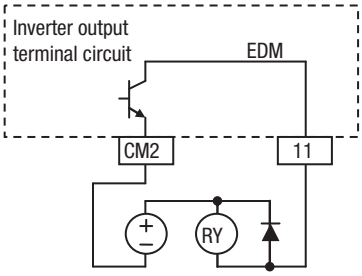

4-7 Analog Input Operation

The MX2 inverters provide for analog input to command the inverter frequency output value. The analog input terminal group includes the [L], [OI], [O], and [H] terminals on the control connector, which provide for Voltage [O] or Current [OI] input. All analog input signals must use the analog ground [L].

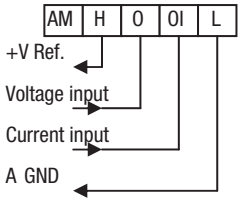

If you use either the voltage or current analog input, you must select one of them using the logic input terminal function [AT] analog type. Refer to the table on next page showing the activation of each analog input by combination of A005 set parameter and [AT] terminal condition. The [AT] terminal function is covered in "Analog Input Current/Voltage Select" in section 4. Remember that you must also set A001 = 01 to select analog input as the frequency source.

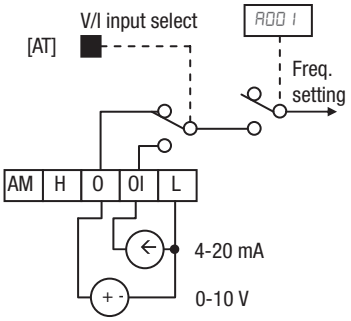

Note If no logic input terminal is configured for the [AT] function, then inverter recognizes that [AT]=OFF and MCU recognizes [O]+[OI] as analog input. In case either (O) or (OI) is to be refered, please ground the other.

Using an external potentiometer is a common way to control the inverter output frequency (and a good way to learn how to use the analog inputs). The potentiometer uses the built-in 10 V reference [H] and the analog ground [L] for excitation, and the voltage input [O] for the signal. By default, the [AT] terminal selects the voltage input when it is OFF.

Take care to use the proper resistance for the potentiometer, which is 1~2 kΩ, 2 Watts.

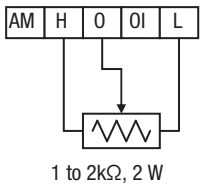

Voltage Input – The voltage input circuit uses terminals [L] and [O]. Attach the signal cable's shield wire only to terminal [L] on the inverter. Maintain the voltage within specifications (do not apply negative voltage).

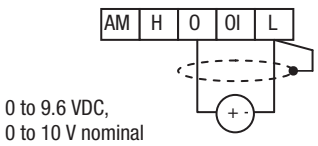

Current Input – The current input circuit uses terminals [OI] and [L]. The current comes from a *sourcing* type transmitter; a *sinking* type will not work! This means the current must flow into terminal [OI], and terminal [L] is the return back to the transmitter. The input impedance from [OI] to [L] is 100 Ohms. Attach the cable shield wire only to terminal [L] on the inverter.

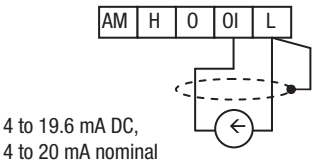

See I/O specs on page 195.

The following table shows the available analog input settings. Parameter A005 and the input terminal [AT] determine the External Frequency Command input terminals that are available, and how they function. The analog inputs [O] and [OI] use terminal [L] as the reference (signal return).

A005	[AT] Input	Analog Input Configuration
00	ON	[O]
	OFF	[OI]
02	ON	[O]
	OFF	Integrated POT on external panel
03	ON	[OI]
	OFF	Integrated POT on external panel

4-7-1 Other Analog Input-related topics:

- "Analog Input Settings"
- "Additional Analog Input Settings"
- "Analog Signal Calibration Settings"
- "Analog Input Current/Voltage Select"
- "ADD Frequency Enable"
- "Analog Input Disconnect Detect"

4-7-2 Pulse Train Input Operation

The MX2 inverter is capable of accepting pulse train input signals, that are used for frequency command, process variable (feedback) for PID control, and simple positioning. The dedicated terminal is called "EA" and "EB". Terminal "EA" is a dedicated terminal, and the terminal "EB" is an intelligent terminal, that has to be changed by a parameter setting.

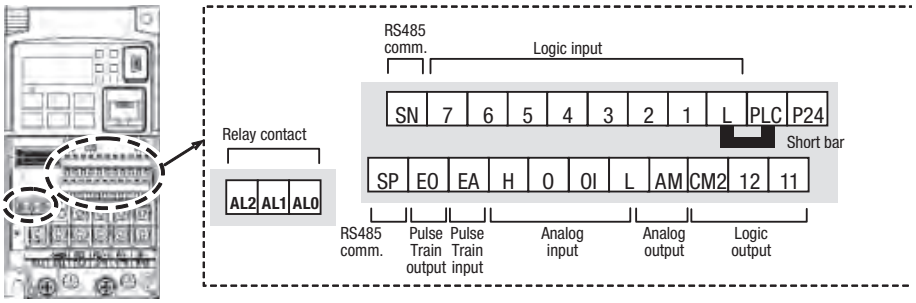

Terminal Name	Description	Ratings
EA	Pulse train input A	For frequency command, 32 kHz max. Common is [L]
EB (Input terminal 7)	Pulse train input B (Set C007 to 05)	27 VDC max. For frequency command, 2 kHz max. Common is [PLC]

1. Frequency Command by pulse train input

When using this mode, you should set A001 to 06. In this case the frequency is detected by input-capture, and calculated based on the ratio of designated max. frequency (under 32 kHz). Only an input terminal "EA" will be used in this case.

2. Using for process variable of PID control

You can use the pulse train input for process variable (feedback) of PID control. In this case you need to set A076 to 03. Only "EA" input terminal is to be used.

3. Simple positioning by pulse train input

This is to use the pulse train input like an encoder signal. You can select three types of operation.

4-8 Analog Output Operation

In inverter applications it is useful to monitor the inverter operation from a remote location or from the front panel of an inverter enclosure. In some cases, this requires only a panel-mounted volt meter. In other cases, a controller such as a PLC may provide the inverter's frequency command, and require inverter feedback data (such as output frequency or output current) to confirm actual operation. The analog output terminal [AM] serves these purposes.

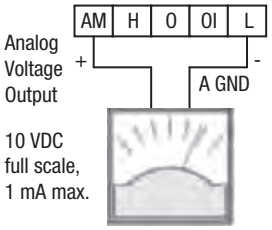

See I/O specs on page 195

The inverter provides an analog voltage output on terminal [AM] with terminal [L] as analog GND reference. The [AM] can output inverter frequency or current output value. Note that the voltage range is 0 to +10 V (positive-going only), regardless of forward or reverse motor rotation. Use C028 to configure terminal [AM] as indicated below.

Func.	Code	Description
C028	00	Output frequency
	01	Output current
	02	Output torque
	04	Output voltage
	05	Power
	06	Thermal load rate
	07	LAD frequency
	10	Fin temperature
	11	Output torque <signed>
	13	YA1 (Drive Programming)
	16	Option

The [AM] signal offset and gain are adjustable, as indicated below.

Func.	Description	Range	Default
C106	AM gain setting	50~200	100
C109	AM bias setting	0~100	0

The graph below shows the effect of the gain and offset setting. To calibrate the [AM] output for your application (analog meter), follow the steps below:

1. Run the motor at the full scale speed, or most common operating speed.
   a) If the analog meter represents output frequency, adjust offset (C 109) first, and then use C 106 to set the voltage for full scale output.
   b) If [AM] represents motor current, adjust offset (C 109) first, and then use C 106 to set the voltage for full scale output. Remember to leave room at the upper end of the range for increased current when the motor is under heavier loads.

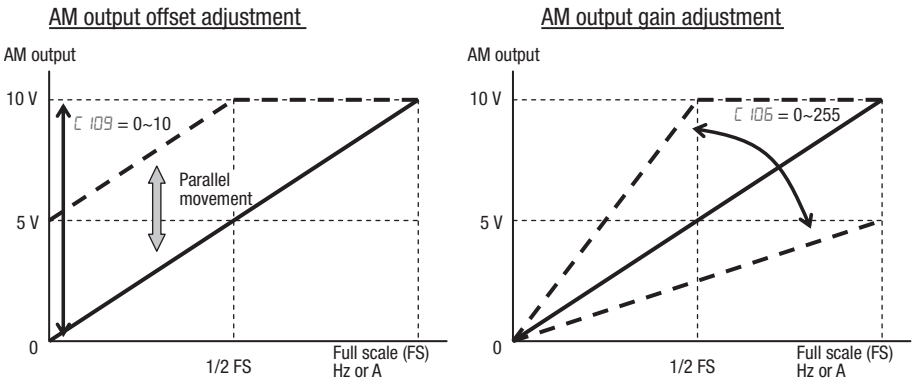

Note As mentioned above, first adjust the offset, and then adjust the gain. Otherwise the required performance cannot be obtained because of the parallel movement of the offset adjustment.

SECTION 5
Inverter System Accessories

5-1 Introduction

5-1-1 Introduction

A motor control system will obviously include a motor and inverter, as well as fuses for safety. If you are connecting a motor to the inverter on a test bench just to get started, that's all you may need for now. But a fully developed system can also have a variety of additional components. Some can be for noise suppression, while others may enhance the inverter's braking performance. The figure below shows a system with several possible optional components, and the table gives part number information.

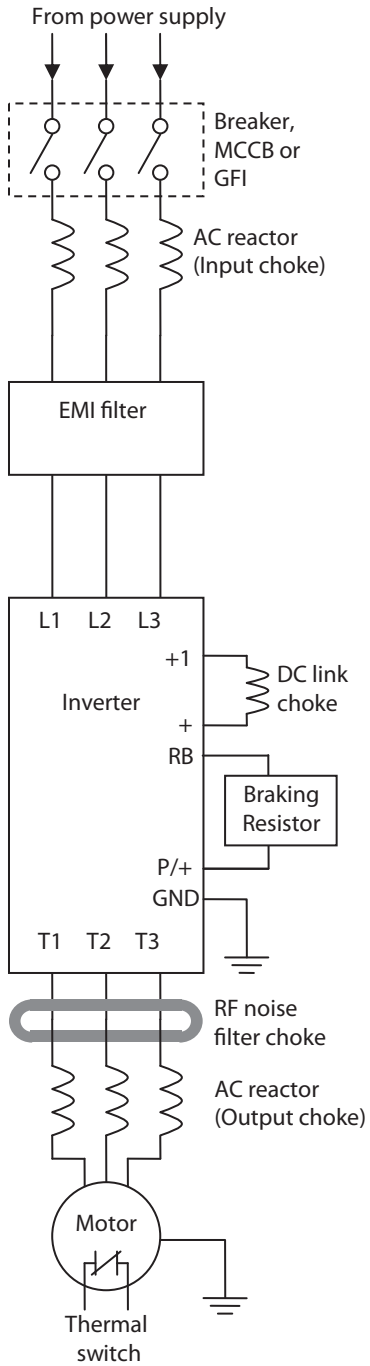

Name	Part No. Series	See page
AC reactor, input side	AX-RAIxxxxxxxx-DE	256
EMC filter (for CE)	AX-FIMxxxx-RE	259
DC reactor	AX-RCxxxxxxxx-RE	261
Braking resistor	AX-REMxxxxxxx-IE	263
RF noise filter choke, output side	AX-FERxxxx-RE	259
AC reactor, output side	AX-RAOxxxxxxxx-DE	258

5-2 Component Descriptions

5-2-1 AC Reactors, Input Side

This is useful in suppressing harmonics induced on the power supply lines, or when the main power voltage imbalance exceeds 3% (and power source capacity is more than 500 kVA), or to smooth out line fluctuations. It also improves the power factor.

In the following cases for a general-purpose inverter, a large peak current flows on the main power supply side, and is able to destroy the inverter module:

- If the unbalanced factor of the power supply is 3% or higher
- If the power supply capacity is at least 10 times greater than the inverter capacity (the power supply capacity is 500 kVA or more)
- If abrupt power supply changes are expected

Examples of these situations include:

1. Several inverters are connected in parallel, sharing the same power bus
2. A thyristor converter and an inverter are connected in parallel, sharing the same power bus
3. An installed phase-advance (power factor correction) capacitor opens and closes

Where these conditions exist or when the connected equipment must be highly reliable, you MUST install an input-side AC reactor of 3% (at a voltage drop at rated current) with respect to the supply voltage on the power supply side. Also, where the effects of an indirect lightning strike are possible, install a lightning conductor.

Example calculation:

V_{RS} = 205 V, V_{ST} = 203 V, V_{TR} = 197 V,

where VRS is R-S line voltage, VST is S-T line voltage, VTR is T-R line voltage

Unbalance factor of voltage =

$$\frac{\text{Max. line voltage (min.)} - \text{Mean Line voltage}}{\text{Meanline voltage}} \times 100$$

$$= \frac{V_{RS} - \left(V_{RS} + V_{ST} + V_{TR}\right)/3}{\left(V_{RS} + V_{ST} + V_{TR}\right)/3} \times 100 = \frac{205 - 202}{202} \times 100 = 1.5\ \%$$

Please refer to the documentation that comes with the AC reactor for installation instructions.

Fig. 1

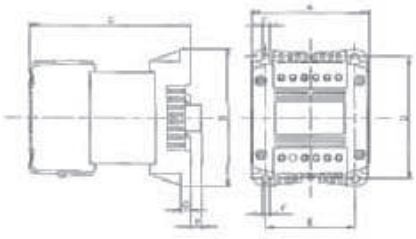

Fig. 2

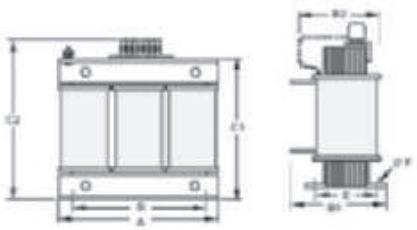

Fig. 1 (single-phase input AC reactor)

Voltage	Reference	Dimensions (mm)								Weight kg	Max. motor output kW	Current value A	Inductance mH
		A	B	C	D	E	F	G	H				
200 V	AX-RAI02000070-DE	84	113	96	101	66	5	7.5	2	1.22	0.4	7.0	2.0
	AX-RAI01700140-DE			116						1.95	0.75	14.0	1.7
	AX-RAI01200200-DE			131						2.55	1.5	20.0	1.2
	AX-RAI00630240-DE			116						1.95	2.2	24.0	0.63

Fig. 2 (three-phase input AC reactor)

Voltage	Reference	Dimensions (mm)						Weight kg	Max. motor output kW	Current value A	Inductance mH
		A	B2	C2	D	E	F				
200 V	AX-RAI02800080-DE	120	70	120	80	52	5.5	1.78	1.5	8.0	2.8
	AX-RAI00880200-DE		80			62		2.35	3.7	20.0	0.88
	AX-RAI00350335-DE	180	85	190	140	55	6	5.5	7.5	33.5	0.35
	AX-RAI00180670-DE								15	67.0	0.18
400 V	AX-RAI07700050-DE	120	70	120	80	52	5.5	1.78	1.5	5.0	7.7
	AX-RAI03500100-DE		80			62		2.35	4.0	10.0	3.5
	AX-RAI01300170-DE							2.50	7.5	17.0	1.3
	AX-RAI00740335-DE	180	85	190	140	55	6	5.5	15	33.5	0.74

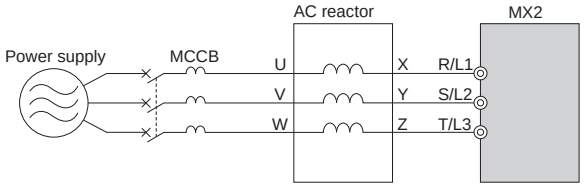

Voltage	Inverter model	DC reactor model
1-phase 200 VAC	3G3MX2-AB002/-AB004	AX-RAI02000070-DE
	3G3MX2-AB007	AX-RAI01700140-DE
	3G3MX2-AB015	AX-RAI01200200-DE
	3G3MX2-AB022	AX-RAI00630240-DE
3-phase 200 VAC	3G3MX2-A2002/-A2004/-A2007	AX-RAI02800080-DE
	3G3MX2-A2015/-A2022/-A2037	AX-RAI00880200-DE
	3G3MX2-A2055/-A2075	AX-RAI00350335-DE
	3G3MX2-A2110/-A2150	AX-RAI00180670-DE
3-phase 400 VAC	3G3MX2-A4004/-A4007/-A4015	AX-RAI07700050-DE
	3G3MX2-A4022/-A4030/-A4040	AX-RAI03500100-DE
	3G3MX2-A4055/-A4075	AX-RAI01300170-DE
	3G3MX2-A4110/-A4150	AX-RAI00740335-DE

5-2-2 AC Reactors, Output Side

This reactor reduces the vibrations in the motor caused by the inverter's switching waveforms, by smoothing the waveforms to approximate commercial power quality. It is also useful to reduce the reflected voltage wave phenomenon when wiring from the inverter to the motor is more than 10 m in length. Please refer to the documentation that comes with the AC reactor for installation instructions.

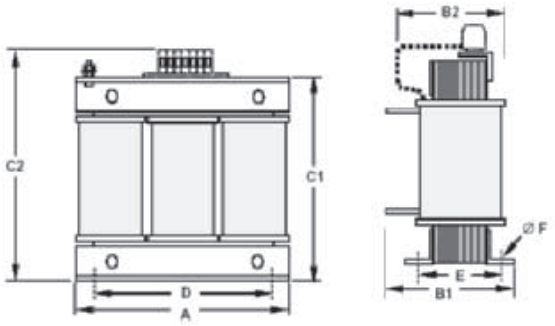

Voltage	Reference	Dimensions (mm)						Weight kg	Max. motor output kW	Current value A	Inductance mH
		A	B2	C2	D	E	F				
200 V	AX-RAO11500026-DE	120	70	120	80	52	5.5	1.78	0.4	2.6	11.50
	AX-RAO07600042-DE								0.75	4.2	7.60
	AX-RAO04100075-DE		80			62		2.35	1.5	7.5	4.10
	AX-RAO03000105-DE								2.2	10.5	3.00
	AX-RAO01830160-DE	180	85	190	140	55	6	5.5	3.7	16.0	1.83
	AX-RAO01150220-DE								5.5	22.0	1.15
	AX-RAO00950320-DE			205				6.5	7.5	32.0	0.95
	AX-RAO00630430-DE		95			65		9.1	11	43.0	0.63
	AX-RAO00490640-DE								15	64.0	0.49
400 V	AX-RAO16300038-DE	120	70	120	80	52	5.5	1.78	1.5	3.8	16.30
	AX-RAO11800053-DE		80					2.35	2.2	5.3	11.80
	AX-RAO07300080-DE					62			4.0	8.0	7.30
	AX-RAO04600110-DE	180	85	190	140	55	6	5.5	5.5	11.0	4.60
	AX-RAO03600160-DE			205				6.5	7.5	16.0	3.60
	AX-RAO02500220-DE		95					9.1	11	22.0	2.50
	AX-RAO02000320-DE		105			85		11.7	15	32.0	2.00

Voltage	Inverter model	DC reactor model
1-phase 200 VAC	3G3MX2-AB001/-AB002/-AB004	AX-RAO11500026-DE
	3G3MX2-AB007	AX-RAO07600042-DE
	3G3MX2-AB015	AX-RAO04100075-DE
	3G3MX2-AB022	AX-RAO03000105-DE
3-phase 200 VAC	3G3MX2-A2001/-A2002/-A2004	AX-RAO11500026-DE
	3G3MX2-A2007	AX-RAO07600042-DE
	3G3MX2-A2015	AX-RAO04100075-DE
	3G3MX2-A2022	AX-RAO03000105-DE
	3G3MX2-A2037	AX-RAO01830160-DE
	3G3MX2-A2055	AX-RAO01150220-DE
	3G3MX2-A2075	AX-RAO00950320-DE
	3G3MX2-A2110	AX-RAO00630430-DE
	3G3MX2-A2150	AX-RAO00490640-DE

Voltage	Inverter model	DC reactor model
3-phase 400 VAC	3G3MX2-A4004/-A4007/-A4015	AX-RAO16300038-DE
	3G3MX2-A4022	AX-RAO11800053-DE
	3G3MX2-A4030/-A4040	AX-RAO07300080-DE
	3G3MX2-A4055	AX-RAO04600110-DE
	3G3MX2-A4075	AX-RAO03600160-DE
	3G3MX2-A4110	AX-RAO02500220-DE
	3G3MX2-A4150	AX-RAO02000320-DE

5-2-3 Zero-phase Reactor (RF Noise Filter)

The zero-phase reactor helps reduce radiated noise from the inverter wiring. It can be used on the input or output side of the inverter. The example zero-phase reactor shown to the right comes with a mounting bracket. The wiring must go through the opening to reduce the RF component of the electrical noise. Loop the wires three times (four turns) to attain the full RF filtering effect. For larger wire sizes, place multiple zero-phase reactors (up to four) side-by-side for a greater filtering effect.

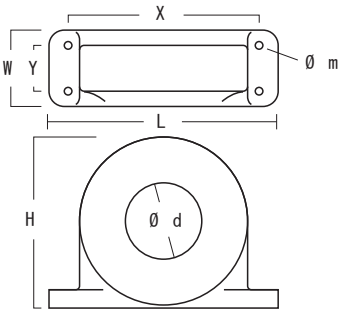

Reference	D diameter	Dimensions (mm)						Weight kg	Description
		L	W	H	X	Y	m		
AX-FER2102-RE	21	85	22	46	70	-	5	0.1	For 2.2 kW motors or below
AX-FER2515-RE	25	105	25	62	90	-		0.2	For 15 kW motors or below
AX-FER5045-RE	50	150	50	110	125	30		0.7	For 45 kW motors or below

5-2-4 EMC Filter

The EMC filter reduces the conducted noise on the power supply wiring generated by the inverter. Connect the EMC filter to the inverter primary (input side). Filter is required for compliance to the EMC Class A directive (Europe) and C-TICK (Australia). See D-1 *CE-EMC Installation Guidelines* on page 373.

⚠WARNING The EMC filter has high internal leakage current from power wiring to the chassis. Therefore, connect the chassis ground of the EMC filter before making the power connections to avoid danger of shock or injury.

Rasmi footprint filters

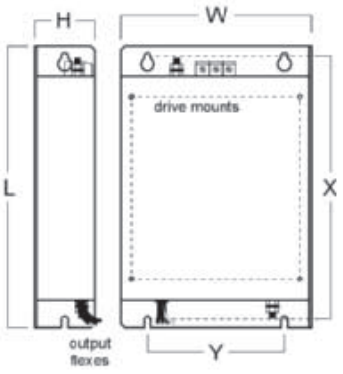

Voltage	Reference	Dimensions (mm)						Model 3G3MX2-□	Current (A)
		W	H	L	X	Y	M		
1 x 200 V	AX-FIM1010-RE	71	45	169	156	51	M4	AB001 / AB002 / AB004	10
	AX-FIM1014-RE	111	50			91		AB007	14
	AX-FIM1024-RE							AB015 / AB022	24
3 x 200 V	AX-FIM2010-RE	82	50	194	181	62	M4	A2001 / A2002 / A2004 / A2007	10
	AX-FIM2020-RE	111		169	156	91		A2015 / A2022	20
	AX-FIM2030-RE	144		174	161	120		A2037	30
	AX-FIM2060-RE	150	52	320	290	122	M5	A2055 / A2075	60
	AX-FIM2080-RE	188	62	362	330	160		A2110	80
	AX-FIM2100-RE	220		415	380	192	M6	A2150	100
3 x 400 V	AX-FIM3005-RE	114	46	169	156	91	M4	A4004 / A4007	5
	AX-FIM3010-RE							A4015 / A4022 / A4030	10
	AX-FIM3014-RE	144	50	174	161	120		A4040	14
	AX-FIM3030-RE	150	52	306	290	122	M5	A4055 / A4075	30
	AX-FIM3050-RE	182	62	357	330	160		A4110 / A4150	50

Schaffner footprint filters

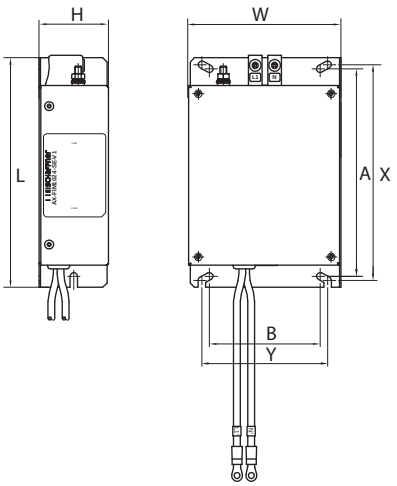

Voltage	Reference	Dimensions (mm)								Model 3G3MX2-□	Current (A)
		W	H	L	X	Y	A	B	M		
1 x 200 V	AX-FIM1010-SE-V1	70	40	166	156	51	150	50	M5	AB001 / AB002 / AB004	8
	AX-FIM1024-SE-V1	110	50			91		80		AB007 / AB015 / AB022	27
3 x 200 V	AX-FIM2010-SE-V1	80	40	191	181	62		50		A2001 / A2002 / A2004 / A2007	7.8
	AX-FIM2020-SE-V1	110	50	160	156	91		80		A2015 / A2022	16
	AX-FIM2030-SE-V1	142		171	161	120		112		A2037	25
	AX-FIM2060-SE-V1	140	55	304	290	122	286			A2055 / A2075	50
	AX-FIM2080-SE-V1	180		344	330	160	323	140		A2110	75
	AX-FIM2100-SE-V1	220	65	394	380	192	376	180		A2150	100
3 x 400 V	AX-FIM3005-SE-V1	110	50	166	156	91	150	80		A4004 / A4007	6
	AX-FIM3010-SE-V1									A4015 / A4022 / A4030	12
	AX-FIM3014-SE-V1	142		171	161	120		112		A4040	15
	AX-FIM3030-SE-V1	140	55	304	290	122	286			A4055 / A4075	29
	AX-FIM3050-SE-V1	180		344	330	160	323	140		A4110 / A4150	48

5-2-5 DC Reactor

The DC Reactor suppresses harmonics generated by the inverter. It attenuates the high-frequency components on the inverter's internal DC bus (link). However, note that it does not protect the diode rectifiers in the inverter input circuit.

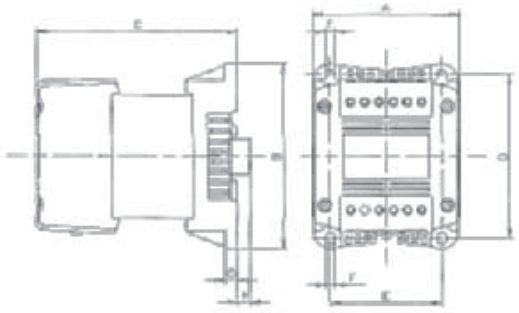

Voltage	Reference	Dimensions (mm)								Weight kg	Max. motor output kW	Current value A	Inductance mH
		A	B	C	D	E	F	G	H				
200 V	AX-RC21400016-DE	84	113	96	101	66	5	7.5	2	1.22	0.2	1.6	21.4
	AX-RC10700032-DE										0.4	3.2	10.7
	AX-RC06750061-DE			105						1.60	0.7	6.1	6.75
	AX-RC03510093-DE										1.5	9.3	3.51
	AX-RC02510138-DE			116						1.95	2.2	13.8	2.51
	AX-RC01600223-DE	108	135	124	120	82	6.5	9.5	9.5	3.20	3.7	22.3	1.60
	AX-RC01110309-DE	120	152	136	135	94	7		-	5.20	5.5	30.9	1.11
	AX-RC00840437-DE			146					-	6.00	7.5	43.7	0.84
	AX-RC00590614-DE	150	177	160	160	115		2	-	11.4	11.0	61.4	0.59
	AX-RC00440859-DE			182.6					-	14.3	15.0	85.9	0.44
400 V	AX-RC43000020-DE	84	113	96	101	66	5	7.5	2	1.22	0.4	2.0	43.0
	AX-RC27000030-DE			105						1.60	0.7	3.0	27.0
	AX-RC14000047-DE										1.5	4.7	14.0
	AX-RC10100069-DE			116						1.95	2.2	6.9	10.1
	AX-RC08250093-DE			131						2.65	3.0	9.3	8.25
	AX-RC06400116-DE	108	135	133	120	82	6.5	9.5	9.5	3.70	4.0	11.6	6.40
	AX-RC04410167-DE	120	152	136	135	94	7		-	5.20	5.5	16.7	4.41
	AX-RC03350219-DE			146					-	6.00	7.5	21.9	3.35
	AX-RC02330307-DE	150	177	160	160	115		2	-	11.4	11.0	30.7	2.33
	AX-RC01750430-DE			182.6					-	14.3	15.0	43.0	1.75

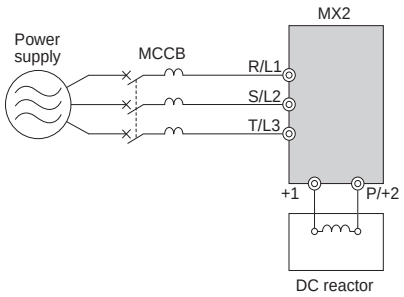

Voltage	Inverter model	DC reactor model
1-phase 200 VAC	3G3MX2-AB001	AX-RC10700032-DE
	3G3MX2-AB002	
	3G3MX2-AB004	AX-RC06750061-DE
	3G3MX2-AB007	AX-RC03510093-DE
	3G3MX2-AB015	AX-RC02510138-DE
	3G3MX2-AB022	AX-RC01600223-DE
3-phase 200 VAC	3G3MX2-A2001	AX-RC21400016-DE
	3G3MX2-A2002	
	3G3MX2-A2004	AX-RC10700032-DE
	3G3MX2-A2007	AX-RC06750061-DE
	3G3MX2-A2015	AX-RC03510093-DE
	3G3MX2-A2022	AX-RC02510138-DE
	3G3MX2-A2037	AX-RC01600223-DE
	3G3MX2-A2055	AX-RC01110309-DE
	3G3MX2-A2075	AX-RC00840437-DE
	3G3MX2-A2110	AX-RC00590614-DE
	3G3MX2-A2150	AX-RC00440859-DE
3-phase 400 VAC	3G3MX2-A4004	AX-RC43000020-DE
	3G3MX2-A4007	AX-RC27000030-DE
	3G3MX2-A4015	AX-RC14000047-DE
	3G3MX2-A4022	AX-RC10100069-DE
	3G3MX2-A4030	AX-RC08250093-DE
	3G3MX2-A4040	AX-RC06400116-DE
	3G3MX2-A4055	AX-RC04410167-DE
	3G3MX2-A4075	AX-RC03350219-DE
	3G3MX2-A4110	AX-RC02330307-DE
	3G3MX2-A4150	AX-RC01750430-DE

5-3 Dynamic Braking

5-3-1 Introduction

- The purpose of dynamic braking is to improve the ability of the inverter to stop (decelerate) the motor and load. This becomes necessary when an application has some or all of the following characteristics:
- High load inertia compared to the available motor torque
- The application requires frequent or sudden changes in speed
- System losses are not great enough to slow the motor as needed

When the inverter reduces its output frequency to decelerate the load, the motor can temporarily become a generator. This occurs when the motor rotation frequency is higher than the inverter output frequency. This condition can cause the inverter DC bus voltage to rise, resulting in an over-voltage trip. In many applications, the over-voltage condition serves as a warning signal that we have exceeded the deceleration capabilities of the system. The MX2 inverters have a built-in braking chopper, which sends the regenerative energy from the motor during deceleration to the optional braking resistor(s). external braking units may also be used if higher braking torques and/or duty cycles are required. The dynamic braking resistor serves as a load, developing heat to stop the motor just as brakes on an automobile develop heat during braking.

The braking resistor is the main component of a braking resistor assembly, it includes a fuse and a thermal relay for safety. And switching circuit and power resistor are the main components of the dynamic braking unit that includes a fuse and thermally activated alarm relay for safety. However, be careful to avoid overheating its resistor. The fuse and thermal relay are safeguards for extreme conditions, but the inverter can maintain braking usage in a safe zone.

5-3-2 Dynamic Braking Usage

The inverter controls braking via a duty cycle method (percent of the time braking is ON versus total time). Parameter b090 sets the dynamic braking usage ratio. In the graph to the right, the example shows three uses of dynamic braking in a 100-second period. The inverter calculates the average percentage usage in that time (T%). The percentage of usage is proportional to the heat dissipated. If T% is greater than the b090 parameter setting, the inverter enters the trip mode and turns off the frequency output.

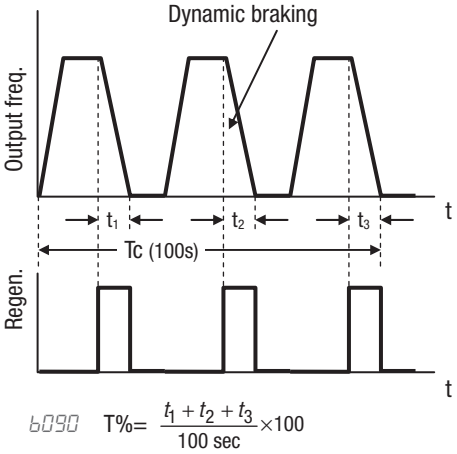

Please note the following:

- When b090 is set for 0%, dynamic braking is not performed
- When the T% value exceeds the limit set by b090, dynamic braking ends.
- When mounting an external dynamic braking unit, set the usage ratio (b090) to 0.0 and remove the external resistors.
- The cable from the external resistor to the inverter must not exceed 5 m length.
- The individual wires from the resistor to the inverter must not be bundled together.

5-3-3 Braking Resistor Selection Tables

The MX2 series inverters have integrated braking units (chopper). Stopping torque is available by adding external resistors. The required braking torque depends on your particular application. Next table helps you to choose the right resistor for 3% and 10% braking duty applications (ocasional braking).
To achieve higher duty cycles, external braking units (separate chopper with higher capacity) are required. Check with your supplier.

AX-REM00K1200

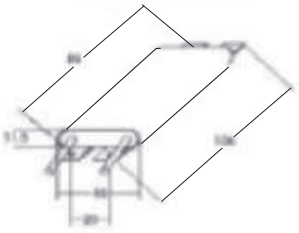

Fig 1



Fig 2

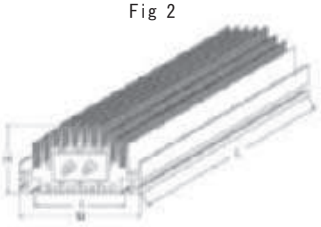

Fig 3

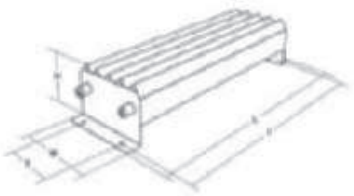

Fig 4

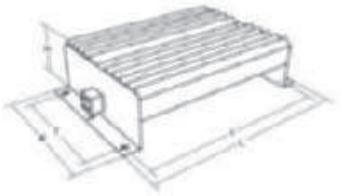

Type	Fig.	Dimensions (mm)					Weight kg
		L	H	M	I	T	
AX-REM00K1400-IE	1	105	27	36	94	-	0.2
AX-REM00K2070-IE							
AX-REM00K2120-IE							
AX-REM00K2200-IE							
AX-REM00K4075-IE		200			189		0.425
AX-REM00K4035-IE							
AX-REM00K4030-IE							
AX-REM00K5120-IE		260			249		0.58
AX-REM00K6100-IE		320			309		0.73
AX-REM00K6035-IE							
AX-REM00K9070-IE	2	200	62	100	74		1.41
AX-REM00K9020-IE							
AX-REM00K9017-IE							
AX-REM01K9070-IE	3	365	73	105	350	70	4
AX-REM01K9017-IE							
AX-REM02K1070-IE	4	310	100	240	295	210	7
AX-REM02K1017-IE							
AX-REM03K5035-IE		365			350		8
AX-REM03K5010-IE							

Inverter					Braking resistor unit	
Voltage	Max. motor kW	Inverter 3G3MX2-□		Connectable min. resistance Ω	Inverter mounted type (3 %ED, 10 sec max)	
		3-phase	1-phase		Type AX-	Resist Ω
200 V (single-/ three-phase)	0.12	2001	B001	100	REM00K1400-IE	400
	0.25	2002	B002			
	0.55	2004	B004		REM00K1200-IE	200
	1.1	2007	B007	50		
	1.5	2015	B015		REM00K2070-IE	70
	2.2	2022	B022	35		
	4.0	2040	-		REM00K4075-IE	75
	5.5	2055	–	20	REM00K4035-IE	35
	7.5	2075	–	17		
	11	2110	-		REM00K6035-IE	35
	15	2150	-	10	REM00K9017-IE	17
400 V (three-phase)	0.55	4004	–	180	REM00K1400-IE	400
	1.1	4007	–			
	1.5	4015	–		REM00K1200-IE	200
	2.2	4022	–	100	REM00K2200-IE	200
	3.0	4030	–		REM00K2120-IE	120
	4.0	4040	–			
	5.5	4055	–	70	REM00K4075-IE	75
	7.5	4075	–			
	11	4110	-		REM00K6100-IE	100
	15	4150	-	35	REM00K9070-IE	70

Inverter					Braking resistor unit		
Voltage	Max. motor kW	Inverter 3G3MX2-□		Connectable min. resistance Ω	Inverter mounted type (10%ED, 10 sec max)		Braking torque %
		3-phase	1-phase		Type AX-	Resist Ω	
200 V (single-/ three-phase)	0.12	2001	B001	100	REM00K1400-IE	400	200
	0.25	2002	B002				180
	0.55	2004	B004		REM00K1200-IE	200	180
	1.1	2007	B007	50	REM00K2070-IE	70	200
	1.5	2015	B015		REM00K4075-IE	75	130
	2.2	2022	B022	35	REM00K4035-IE	35	180
	4.0	2040	-		REM00K6035-IE	35	100
	5.5	2055	–	20	REM00K9020-IE	20	150
	7.5	2075	–	17	REM01K9017-IE	17	110
	11	2110	-		REM02K1017-IE	17	75
	15	2150	-	10	REM03K5010-IE	10	95
400 V (three-phase)	0.55	4004	–	180	REM00K1400-IE	400	200
	1.1	4007	–				200
	1.5	4015	–		REM00K2200-IE	200	190
	2.2	4022	–	100	REM00K5120-IE	120	200
	3.0	4030	–				160
	4.0	4040	–		REM00K6100-IE	100	140
	5.5	4055	–	70	REM00K9070-IE	70	150
	7.5	4075	–		REM01K9070-IE	70	110
	11	4110	-		REM02K1070-IE	70	75
	15	4150	-	35	REM03K5035-IE	35	110

SECTION 6
Troubleshooting and Maintenance

6-1 Troubleshooting

6-1-1 Safety Messages

Please read the following safety messages before troubleshooting or performing maintenance on the inverter and motor system.

⚠ **WARNING** Wait at least ten (10) minutes after turning OFF the input power supply before performing maintenance or an inspection. Otherwise, there is a danger of electric shock.

⚠ **WARNING** Make sure that only qualified personnel will perform maintenance, inspection, and part replacement. Before starting to work, remove any metallic objects from your person (wristwatch, bracelet, etc.). Be sure to use tools with insulated handles. Otherwise, there is a danger of electric shock and/or injury to personnel.

⚠ **WARNING** Never remove connectors by pulling on its wire leads (wires for cooling fan and logic P.C.board). Otherwise, there is a danger of fire due to wire breakage and/or injury to personnel.

6-1-2 General Precautions and Notes

- Always keep the unit clean so that dust or other foreign matter does not enter the inverter.
- Take special care in regard to breaking wires or making connection mistakes.
- Firmly connect terminals and connectors.
- Keep electronic equipment away from moisture and oil. Dust, steel filings and other foreign matter can damage insulation, causing unexpected accidents, so take special care.

6-1-3 Inspection Items

This chapter provides instructions or checklists for these inspection items:

- Daily inspection
- Periodical inspection (approximately once a year)
- Insulation resistance (Megger) test (approximately once two years)

6-1-4 Troubleshooting Tips

The table below lists typical symptoms and the corresponding solution(s).

1. Inverter does not power up.

Possible Cause(s)	Corrective Action
Power cable is incorrectly wired.	Check input wiring
Short bar or DCL between [P] and [PD] is disconnected.	Install short bar or DCL between [P] and [PD] terminal.
Power cable is broken.	Check input wiring.

2. Motor does not start.

Possible Cause(s)	Corrective Action
Incorrect RUN command source is selected.	Check RUN command selection (A002) for correct source. Ex. Terminal (digital input) : 01 Operator (RUN key) : 02
Incorrect frequency source is selected.	Check frequency reference selection (A001) for correct source. Ex. Terminal (analog input) : 01 Operator (F001) : 02
Frequency setting is 0 Hz.	If frequency reference selection is terminal (A001=01), check analog voltage or current signal at [O] or [OI] terminals.
	If frequency reference selection is operator (A001=02), set frequency in F001.
	Depending on frequency source, input proper frequency reference.
	If frequency reference selection is multi-speed operation, set frequency in A020 to A035 and A220.
RUN command is not set to input terminal.	If RUN command selection is terminal (A002=01), set "forward" (00:FW) or "reverse" (01:RV) to any input terminals. In case of 3-wire control, set "3-wire start" (20:STA), "3-wire stop" (21:STP) and "3-wire FW/RV" (22:F/R) to any input terminals.
"Multi-step speed reference" (02 to 05:CF1 to CF4)" is (are) set to input terminal(s) and active.	Deactivate the input(s), or check the frequency reference parameters associated (A021 to A035).
Both FWD and REV input are active.	If RUN command source is FWD/REV input, activate either FWD or REV input.
Rotation direction limit selection (b035) is enabled.	Check b035.
Incorrect input wiring or short bar position	Wire inputs correctly and/or install short bar. (ON/OFF status of inputs are monitored in d005.)
Incorrect analog input or variable resistor wiring	Wire correctly. In case of analog voltage or variable resistor input, check voltage between [O] and [L] terminal. In case of analog current, check current between current source and [OI] terminal.
RUN command source is operator, but input terminal is set to "Force terminal" and active.	Deactivate the input.
RUN command source is terminal, but input terminal is set to "Force operator" and active.	Deactivate the input.
Inverter is in trip status. (With ALARM LED and "Exxx" indication)	Reset inverter by STOP/RESET key and check error code.

Possible Cause(s)	Corrective Action
Safety function is enabled and either GS1 or GS2 input is inactive.	If safety function is used, activate both GS1 and GS2. If not, disable safety function by dip switch.
" 18:RS", " 14:CS" or " 11:FRS" is set to input terminal and the input is inactive.	Deactivate the input.
"84:ROK" is set to input terminal and the input is active.	Activate the input.
Cable between inverter and motor or internal cable of motor is breaking.	Check the wiring.
Excess load.	Remove excess load.
Motor is locked.	Unlock the motor.

3. Motor does not accelerate to command speed.

Possible Cause(s)	Corrective Action
Bad connection of analog wiring.	Check the wiring. In case of analog voltage or variable resistor input, check voltage between [O] and [L] terminal. In case of analog current, check current between current source and [OI] terminal.
Overload restriction or OC suppression function works.	Check the function level.
Max. frequency (A004) or upper limit (A061/A261) is lower than as expected.	Check the value.
Acceleration time is excessive.	Change acceleration time (F002/A092/A292).
"Multi-speed input(s) (02 to 05:CF1 to CF4)" is (are) set to input terminal(s) and active.	Deactivate the input(s).
"06:JG" is set to input terminal and the input is active.	Deactivate the input.
Excess load.	Remove excess load.
Motor is locked.	Unlock the motor.

4. Inverter does not respond to changes in frequency setting from operator.

Possible Cause(s)	Corrective Action
Incorrect frequency source is selected.	Check frequency reference selection (A001=02).
"51:F-TM" is set to input terminal and the input is active.	Deactivate the input.

5. A part of function codes is not displayed.

Possible Cause(s)	Corrective Action
"Display selection" (b037) is enabled.	Set 00 (complete display) to b037.
"86:DISP" is set to input terminal and the input is active.	Deactivate the input.

6. Operator (keypad) does not respond.

Possible Cause(s)	Corrective Action
"86:DISP" is set to input terminal and the input is active.	Deactivate the input.

7. Parameter data does not change.

Possible Cause(s)	Corrective Action
Inverter is in RUN status.	Stop the inverter, make sure the motor stops and try again. If "RUN mode edit" is enabled, a part of function codes can be changed in RUN status.
Soft lock selection (b031) is enabled.	Disable software lock function.

8. Motor rotates reverse direction with forward command.

Possible Cause(s)	Corrective Action
Incorrect power wiring.	Exchange any two of U/T1, V/T2 or W/T3.
Incorrect logic of direction signal in 3-wire operation.	Check the logic of input set as "22:F/R".

9. Motor rotates reverse direction with RUN key of keypad.

Possible Cause(s)	Corrective Action
Operator rotation direction selection (F004) is incorrectly set.	Check F004.

10. Overcurrent trip (E03)

Possible Cause(s)	Corrective Action
Acceleration time is short.	Change acceleration time (F002/A092/A292).
	Enable "acceleration stop" function (A069, A070)
Excess load.	Remove excess load.
	Enable torque boost function.
	Set free V/f in V/F characteristics selection (A044/A244=02)
Overload limit selection (b021) is disabled (00).	Enable overload limit selection (b021=01/02/03).
Despite overload restriction is enabled, the inverter trips due to Overcurrent (E03).	
Overload limit level (b022/b025) is high.	Set overload limit level (b022/b025) lower.
Overload limit parameter (b023/b026) is too short.	Set overload limit parameter (b023/b026) longer.

11. STOP/RESET key does not respond.

Possible Cause(s)	Corrective Action
STOP/RESET key disabled.	Check "STOP key selection" function. (b087)
Overvoltage protection function selection during deceleration (b130) or selection of non-stop function at momentary power interruption (b050) function is enabled.	Check b130 and b050.

12. Sound noise of motor or machine.

Possible Cause(s)	Corrective Action
Carrier frequency is low.	Set carrier frequency (b083) higher. (This could cause electric noise and leak current higher.)
Machine frequency and motor frequency are resonated.	Change output frequency slightly. If resonating in accel/deceleration, use jump frequency function (A063-68) to avoid machine frequency.
Over excitation	Set base frequency (A003/A203) and AVR voltage selection (A082/A282) according to motor rating. If not improved, reduce output voltage gain (A045/A245) slightly or change V/f characteristics selection (A044/A244) as free V/f.

13. Motor overload trip (E05).

Possible Cause(s)	Corrective Action
Improper electronic thermal level	Check electronic thermal level (b012/b013/b910/b911/b912)
The application needs frequent strong accelerations with high peak currents.	Check if the application can accept softer acceleration time to minimize peak currents F002/F202/A092/A292). Motor parameters are forcing too high unnecessary current to the motor (H020 to H034 or H005), depending in motor control method (A044/A244). If the inverter really can not deliver the current, change inverter to a higher power.

14. Over voltage trip (E07).

Possible Cause(s)	Corrective Action
Short deceleration time	Change deceleration time. (F003/F203/A093/A293)
Overvoltage protection function selection during deceleration (b130) is disabled (00).	Enable overvoltage suppression (b130=01/02).
In case the inverter trips due to over voltage, despite over voltage suppression is enabled.	
Overvoltage protection integral time setting (b134) or integral time (b135).	Check overvoltage protection integral time setting (b134) and integral time (b135).
Overvoltage protection level during deceleration (b131) is high.	Set Overvoltage protection level during deceleration (b131) lower.

15. Thermal trip (E21)

Possible Cause(s)	Corrective Action
Heat sink is clog	Clean the Heat sink

16. Drive Error (E30)

Possible Cause(s)	Corrective Action
Short circuit in output circuit	Check the output cables
Ground fault	Check the output cables and motor
Main circuit element damage	Check the IGBT's

17. Thermistor error trip (E35).

Possible Cause(s)	Corrective Action
Thermistor is set to input [5] and DC24V is supplied.	Check setting of input terminal [5] (C005).

18. Unstable output frequency.

Possible Cause(s)	Corrective Action
Improper parameters	Set output frequency slightly smaller or bigger value than power source frequency.
	Change motor stabilization parameter (H006/H203).
Load variation is excessive.	Change motor and inverter to one size bigger.
Power voltage variation is excessive.	Check power source.

19. Output torque is not sufficient.

Possible Cause(s)	Corrective Action
Improper parameters [Acceleration]	Increase manual torque boost (A042/A242-A043/A243)
	Reduce AVR filter time constant (A083).
	Change V/f characteristics selection (A044/A244) to SLV.
	Change torque boost selection (A041/A241) to automatic.
Improper parameters [Deceleration]	Increase deceleration time (F003/F203/A093/A293).
	Disable AVR selection (A081/A281).
	Install dynamic braking resistor or regenerative braking unit.

20. If cable to operator is disconnected, inveter will trip or stop.

Possible Cause(s)	Corrective Action
Improper setting of b165.	Set ex.operator com loss action (b165) to 02.

21. No response over Modbus communication.

Possible Cause(s)	Corrective Action
New parameter is not updated.	If C071, C074 or C075 is changed, cycle power or reset inverter by turning RS terminal ON and OFF.
Incorrect setting of RUN command selection (A002/A202).	Set RUN command selection (A002/A202) to 03.
Incorrect setting of Frequency reference selection (A001/A201).	Set frequency reference selection (A001/A201) to 03.
Incorrect setting of com. speed.	Check communication speed (A071).
Incorrect setting or duplication of Modbus address.	Check Modbus address (A072).
Incorrect setting of com. parity.	Check communication parity (A074).
Incorrect setting of com. stop bit.	Check communication stop bit (A075).
Incorrect wiring.	Check communication wiring at SP,SN terminals.

22. When inverter starts, ECB (Earth leakage Circuit Breaker) trips.

Possible Cause(s)	Corrective Action
Leak current of inverter is excessive.	Reduce carrier frequency (A083).
	Increase current sensor level of ECB or replace ECB with another one having higher current sensor level.

23. PM troubleshooting information.

Operation status	Symptom	Adjustment method	Adjustment item
Starting	Trouble is caused when reverse run.	Enable to the initial magnet position estimation function.	H123
	Generate out-of-step. Generate overcurrent trip.	Increase the starting current.	H117
		Increase the starting time.	H118
	Need for early starting.	Enable to the initial magnet position estimation function, and reduce the starting time.	H118, H123
Running under minimum frequency (H121)	Motor runs unsteadily.	Increase the starting current.	H117
Running around minimum frequency (H121)	Motor generates an impact. Generate overcurrent trip.	Adjust the speed response.	H116
		Adjust the minimum frequency when a load change.	H121

Operation status	Symptom	Adjustment method	Adjustment item
Runing over minimum frequency (H121)	Motor generate a hunting.	Adjust the speed response.	H116
		Reduce the stabilization constant. (When value is too small, you may not be able to obtain motor torque and motor will generate inpact or overcurrent trip near H121)	H119
		Increase the no-load current.	H122

6-2 Monitoring Trip Events, History, & Conditions

6-2-1 Fault Detection and Clearing

The microprocessor in the inverter detects a variety of fault conditions and captures the event, recording it in a history table. The inverter output turns OFF, or "trips" similar to the way a circuit breaker trips due to an over-current condition. Most faults occur when the motor is running (refer to the diagram to the right). However, the inverter could have an internal fault and trip in Stop Mode.

In either case, you can clear the fault by pressing the Stop/Reset key. Additionally, you can clear the inverter's cumulative trip history by performing the procedure 6-3 *Restoring Factory Default Settings* on page 279 (setting b084=00 will clear the trip history but leave inverter settings intact).

6-2-2 Error Codes

An error code will appear on the display automatically when a fault causes the inverter to trip. The following table lists the cause associated with the error.

Erro Code	Name	Cause(s)
E01	Over-current event while at constant speed	The inverter output was short-circuited, or the motor shaft is locked or has a heavy load. These conditions cause excessive current for the inverter, so the inverter output is turned OFF. The dual-voltage motor is wired incorrectly.
E02	Over-current event during deceleration	
E03	Over-current event during acceleration	
E04	Over-current event during other conditions	
E05	Motor overload protection	When a motor overload is detected by the electronic thermal function, the inverter trips and turns OFF its output. Check that the thermal model is properly set in parameter b012, b013, b910, b911 and b912. Check if the application can accept softer acceleration rates to minimize peak currents F002/F202/A092/A292). Check if motor parameters are not correctly set (H020 to H034 or H005), depending in motor control method (A044/A244).
E06	Braking resistor overload protection	When the BRD operation rate exceeds the setting of "b090", this protective function shuts off the inverter output and displays the error code.
E07	Over-voltage protection	When the DC bus voltage exceeds a threshold, due to regenerative energy from the motor.
E08	EEPROM error	When the built-in EEPROM memory has problems due to noise or excessive temperature, the inverter trips and turns OFF its output to the motor.

Erro Code	Name	Cause(s)
E09	Under-voltage error	A decrease of internal DC bus voltage below a threshold results in a control circuit fault. This condition can also generate excessive motor heat or cause low torque. The inverter trips and turns OFF its output.
E 10	Current detection error	If an error occurs in the internal current detection system, the inverter will shut off its output and display the error code.
E 11	CPU error	A malfunction in the built-in CPU has occurred, so the inverter trips and turns OFF its output to the motor.
E 12	External trip	A signal on an intelligent input terminal configured as EXT has occurred. The inverter trips and turns OFF the output to the motor.
E 13	USP	When the Unattended Start Protection (USP) is enabled, an error occurred when power is applied while a Run signal is present. The inverter trips and does not go into Run Mode until the error is cleared.
E 14	Ground fault	The inverter is protected by the detection of ground faults between the inverter output and the motor upon during powerup tests. This feature protects the inverter, and does not protect humans.
E 15	Input over-voltage	The inverter tests for input over-voltage after the inverter has been in Stop Mode for 100 seconds. If an over-voltage condition exists, the inverter enters a fault state. After the fault is cleared, the inverter can enter Run Mode again.
E21	Inverter thermal trip	When the inverter internal temperature is above the threshold, the thermal sensor in the inverter module detects the excessive temperature of the power devices and trips, turning the inverter output OFF.
E22	CPU communication error	When communication between two CPU fails, inverter trips and displays the error code.
E25	Main circuit error (*3)	The inverter will trip if the power supply establishment is not recognized because of a malfunction due to noise or damage to the main circuit element.
E30	Driver error	If instantaneous overcurrent occurs the Inverter will shut off IGBT's output to protect the main circuit element. After tripping due this protective function the inverter cannot retry the operation.
E35	Thermistor	When a thermistor is connected to terminals [5] and [L] and the inverter has sensed the temperature is too high, the inverter trips and turns OFF the output.
E36	Braking error	When "01" has been specified for the Brake Control Selection (b120), the inverter will trip if it cannot receive the braking confirmation signal within the Brake Wait Time for Confirmation (b124) after the output of the brake release signal. Or when the output current doesn't reach the brake release current (b126) during the brake wait time for release (b121)
E37	Safe Stop	Safe stop signal is given.*
E38	Low-speed overload protection	If overload occurs during the motor operation at a very low speed, the inverter will detect the overload and shut off the inverter output.
E40	Operator connection	When the connection between inverter and operator keypad failed, inverter trips and displays the error code.

Erro Code	Name	Cause(s)
E41	Modbus communication error	When “trip” is selected (C076=00) as a behavior in case of communication error, inverter trips when timeout happens.
E43	Drive Programming invalid instruction	The program stored in inverter memory has been destroyed, or the PRG terminal was turned on without a program downloaded to the inverter.
E44	Drive Programming nesting count error	Subroutines, if-statement, or for-next loop are nested in more than eight layers
E45	Drive Programming instruction error	Inverter found the command which cannot be executed.
E50 to E59	Drive Programming user trip (0 to 9)	When user -defined trip happens, inverter trips and displays the error code.
E60 to E69	Option errors (error in connected option board, the meanings change upon the connected option).	These errors are reserved for the option board. Each option board can show the errors for a different meaning .. To check the specific meaning, please refer to the corresponding option board user manual and documentation.
E80	Encoder disconnection	If the encoder wiring is disconnected, an encoder connection error is detected, the encoder fails, or an encoder that does not support line driver output is used, the inverter will shut off its output and display the error code shown on the right.
E81	Excessive speed	If the motor speed rises to “maximum frequency (A004) x overspeed error detection level (P026)” or more, the inverter will shut off its output and display the error code shown on the right.
E83	Positioning range error	If current position exceeds the position range specification (P072-P073), the inverter will shut off its output and display the error code.

* E37.X only can be reset by digital input (18: RS).

Error Code	Name	Descriptions
 Rotating	Reset	RS input is ON or STOP/RESET key is pressed.
	Undervoltage	If input voltage is under the allowed level, inverter shuts off output and wait with this indication.
	Waiting to restart	This indication is displayed after tripping before restarting.
	Restricted operation command	Commanded Rotation direction limit selection is restricted in b035.
	Trip history initializing	Trip history is being initialized.
	No data (Trip monitor)	No trip/waning data exists.
 Blinking	Communication error	Communication between inverter and digital operator fails.
	Auto-tuning completed	Auto-tuning is completed properly.
	Auto-tuning error	Auto-tuning fails.

Note Reset is not allowed in 10 second after trip.

Note When error E08, E14 and E30 occur, reset operation by RS terminal or STOP/RESET key is not accepted. In this case, reset by cycling power. If still same error occurs, perform initialization.

6-2-3 Parameter Warning Codes

If set parameter is conflicted to other parameters, warning code is displayed as follows.

Warning code	Warning conditions		
001	Frequency upper limit (A061)	>	Maximum Frequency (A004)
002	Frequency lower limit (A062)	>	Maximum Frequency (A004)
005	Output frequency setting/ monitor (F001) Multi-step speed reference 0 (A020)	>	Maximum Frequency (A004)
015	Output frequency setting (F001) Multi-step speed reference 0 (A020)	>	Frequency upper limit (A061)
025	Frequency lower limit (A062)	>	Output frequency setting (F001) Multi-step speed reference 0 (A020)
031	Starting frequency (b082)	>	Frequency upper limit (A061)
032	Starting frequency (b082)	>	Frequency lower limit (A062)
035	Starting frequency (b082)	>	Output frequency setting (F001) Multi-step speed reference 0 (A020)
036	Starting frequency (b082)	>	Multi-step speed reference 1 to 15 (A021-A035)
037	Starting frequency (b082)	>	Jogging frequency (A038)

Warning code	Warning conditions		
085	Output frequency setting (F001) Multi-step speed reference 0 (A020)	=	Jump frequency (A063/A063/A063±A064/ A066/A068)
086	Multi-step speed reference 1 to 15 (A021-A035)		
091	Free setting V/f frequency 7	>	Frequency upper limit (A061)
092	Free setting V/f frequency 7	>	Frequency lower limit (A062)
095	Free setting V/f frequency 7	>	Output frequency setting/ monitor (F001) Multi-step speed reference 0 (A020)
201	Frequency upper limit (A261)	>	2nd maximum Frequency (A204)
202	Frequency lower limit (A262)	>	2nd maximum Frequency (A204)
205	Output frequency setting/ monitor (F001) 2nd multi-step speed reference 0 (A220)	>	2nd maximum Frequency (A204)
215	Output frequency setting/ monitor (F001) 2nd multi-step speed reference 0 (A220)	>	Frequency upper limit (A261)
225	Frequency lower limit (A262)	>	Output frequency setting/ monitor (F001) 2nd multi-step speed reference 0 (A220)
231	Starting frequency (b082)	>	Frequency upper limit (A261)
232	Starting frequency (b082)	>	Frequency lower limit (A262)
235	Starting frequency (b082)	>	Output frequency setting/ monitor (F001) 2nd multi-step speed reference 0 (A220)
285	Output frequency setting/ monitor (F001) 2nd multi-step speed reference 0 (A220)	=	Jump frequency (A063/A063/ A063±A064/A066/A068)
291	Free setting V/f frequency 7	>	Frequency upper limit (A261)
292	Free setting V/f frequency 7	>	Frequency lower limit (A262)
295	Free setting V/f frequency 7	>	Output frequency setting/ monitor (F001) 2nd multi-step speed reference 0 (A220)

6-2-4 Trip History and Inverter Status

We recommend that you first find the cause of the fault before clearing it. When a fault occurs, the inverter stores important performance data at the moment of the fault. To access the data, use the monitor function (d xxx) and select d08 1 details about the present fault. The previous 5 faults are stored in d082 to d086. Each error shifts d08 1-d085 to d082-d086, and writes the new error to d08 1.

The following Monitor Menu map shows how to access the error codes. When fault(s) exist, you can review their details by first selecting the proper function: d08 1 is the most recent, and d086 is the oldest.

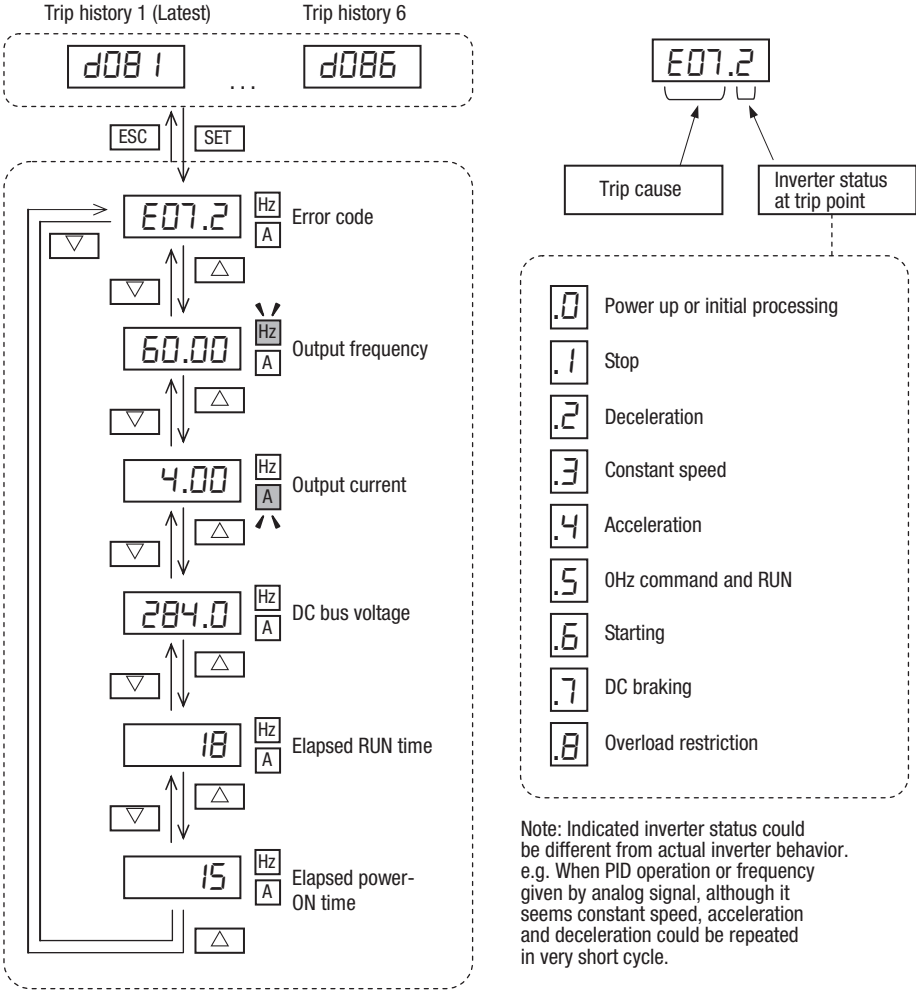

Note: Indicated inverter status could be different from actual inverter behavior. e.g. When PID operation or frequency given by analog signal, although it seems constant speed, acceleration and deceleration could be repeated in very short cycle.

6-3 Restoring Factory Default Settings

You can restore all inverter parameters to the original factory (default) settings according to area of use. After initializing the inverter, use the powerup test in Chapter 2 to get the motor running again. If operation mode is changed, inverter must be initialized to activate new mode. To initialize the inverter, follow the steps below.

1. Select initialization mode in b084.
2. If b084=02, 03 or 04, select initialization target data in b094.
3. If b084=02, 03 or 04, select country code in b085.
4. Set 01 in b180.
5. The following display appears for a few seconds, and initialization is completed with d001 displayed.

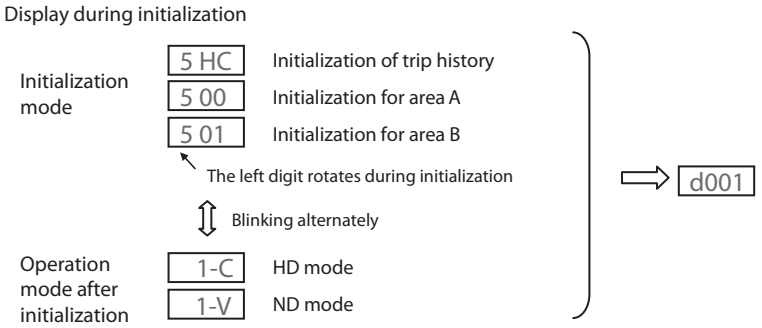

"B" Function		
Func. Code	**Name**	**Description**
b084	Initialization selection	Select initialized data, five option codes: • 00 no (Clears the trip monitor) • 01 Trip data (Initializes data) • 02 Parameters (Clears the trip monitor and initializes data) • 03 Trip+Param (Clears the trip monitor and parameters) • 04 Trp+Prm+EzSQ (Clears the trip monitor, parameters and Drive program)
b094	Initialization target data	Select initialized parameters, four option codes: • 00 ALL • 01 Exp.COM, TERM • 02 Onlu U*** • 03 All exp.U***
b085	Initialization parameter selection	Select initial data for initialization: • 00 JPN • 01 EUR
b180	Initialize trigger	This is to perform initialization by parameter input with b084, b085 and b094. Two option codes: 00 No action 01 Initialize

Data of b084 is not saved in EEPROM to avoid unintentional initializing.

6-4 Maintenance and Inspection

6-4-1 Daily and Yearly Inspection Chart

Item Inspected		Check for...	Inspection Cycle		Inspection Method	Criteria
			Daily	Year		
Overall	Ambient environment	Extreme temperatures & humidity	✓		Thermometer, hygrometer	Ambient temperature between -10 to 50°C, Humidity 90% or less non-condensing
	Major devices	Abnormal noise & vib.	✓		Visual and aural	Stable environment for electronic controls
	Power supply voltage	Voltage tolerance	✓		Digital volt meter, measure between inverter terminals [L1], [L2], [L3]	200 V class: 50/60 Hz 200 to 240 V (-15/+10%) 400 V class: 50/60 Hz 380 to 460 V (-15/+10%)
Main circuit	Ground Insulation	Adequate resistance		✓	Refer to P6-16	5 MΩ or greater
	Mounting	No loose screws		✓	Torque wrench	M3.5: 1.0 Nm M4: 1.4 Nm M5: 3.0 M6: 3.9 to 5.1 Nm M8: 5.9 to 8.8 Nm
	Components	Overheating		✓	Thermal trip events	No trip events
	IGBT	Resistance value		✓	Refer to P6-17	
	Terminal block	Secure connections		✓	Visual	No abnormalities
	Smoothing capacitors	Leaking, swelling	✓		Visual	No abnormalities
	Relay(s)	Chattering		✓	Aural	Single click when switching ON or OFF
	Resistors	Cracks or discoloring		✓	Visual	Check Ohms of optional braking res.
Control circuit	Function	Voltage balance between phases		✓	Measure voltage between U, V, W	Difference must be 2% or less.
		Protection circuit		✓	e.g. Input Ex.trip signal and check inverter behavior and alarm signal.	Functions properly.
	Overall	No odor, discoloring, corrosion		✓	Visual	No abnormalities
	Capacitor	Leaking, swelling	✓		Visual	Undistorted appearance
Cooling	Cooling fan	Noise	✓		Power down, manually rotate	Rotation must be smooth
		Dust	✓		Visual	Vacuum to clean
		Mounting	✓		Visual	Mounted firmly
	Heat sink	Dust	✓		Visual	Vacuum to clean
Display	LEDs	Legibility	✓		Visual	All LED segments work

Note 1 The life of a capacitor is affected by the ambient temperature. See page 286.

Note 2 Designed life of a cooling fan is.10 years. However, it is affected by the ambient temperature and other environmental conditions.

Note 3 The inverter must be cleaned periodically. If dust accumulates on the fan and heat sink, it can cause overheating of the inverter.

6-4-2 Megger test

The megger is a piece of test equipment that uses a high voltage to determine if an insulation degradation has occurred. For inverters, it is important that the power terminals be isolated from the Earth GND terminal via the proper amount of insulation.

The circuit diagram below shows the inverter wiring for performing the megger test. Just follow the steps to perform the test:

1. Remove power from the inverter and wait at least 5 minutes before proceeding.
2. Open the front housing panel to access the power wiring.
3. Remove all wires to terminals [R, S, T, PD/+1, P/+, N/-, U, V, and W]. Most importantly, the input power and motor wires will be disconnected from the inverter.
4. Use a bare wire and short terminals [R, S, T, PD/+1, P/+, N/-, U, V, and W] together as shown in the diagram.
5. Connect the megger to the inverter Earth GND and to the shorted power terminals as shown. Then perform the megger test at 500 VDC and verify 5 MΩ or greater resistance.

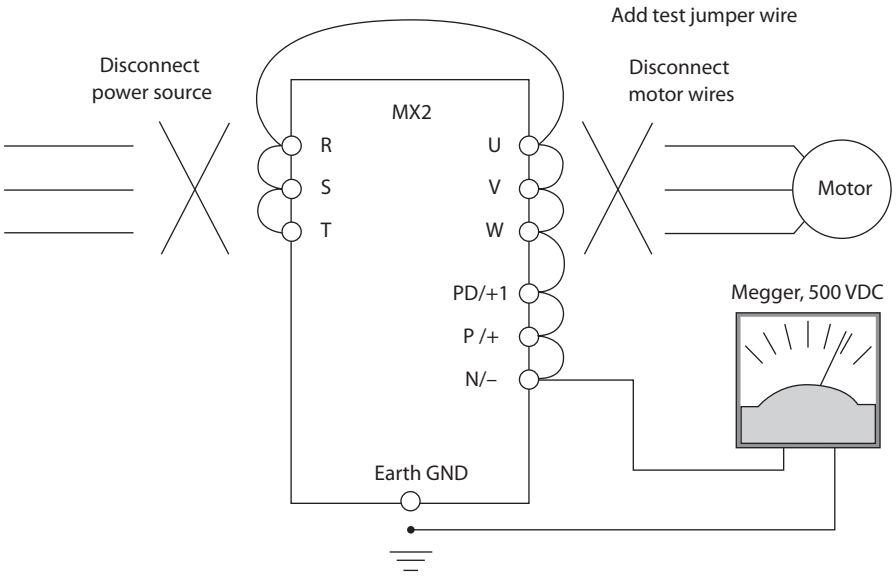

6. After completing the test, disconnect the megger from the inverter.
7. Reconnect the original wires to terminals [R, S, T, PD/+1, P/+, N/-, U, V, and W].

⚠ **Caution** Do not connect the megger to any control circuit terminals such as intelligent I/O, analog terminals, etc. Doing so could cause damage to the inverter.

⚠ **Caution** Never test the withstand voltage (HIPOT) on the inverter. The inverter has a surge protector between the main circuit terminals above and the chassis ground.

⚠ **Caution** Power terminal assignment is different compared to old models such as L100, L200 series, etc,. Pay attention when wiring the power cable.

6-4-3 IGBT Test Method

The following procedure will check the inverter transistors (IGBTs) and diodes:

1. Disconnect input power to terminals [R, S, and T] and motor terminals [U, V, and W].
2. Disconnect any wires from terminals [+] and [-] for regenerative braking.
3. Use a Digital Volt Meter (DVM) and set it for 1 Ω resistance range.
   You can check the status of the charging state of terminals [R, S, T, U, V, W, +, and –] of the inverter and the probe of the DVM by measuring the charging state.

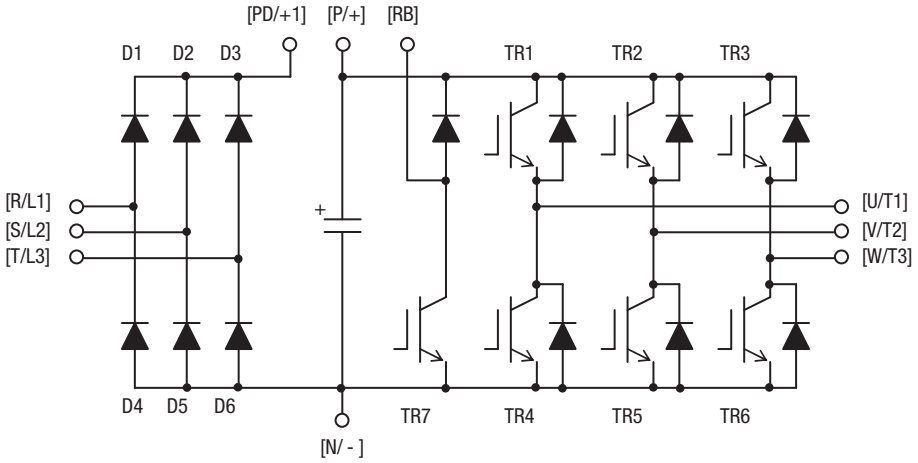

Table Legend

Almost infinite resistance: ≅∞Ω Almost zero resistance: ≅0Ω

Part	DVM		Measured Value
	–	+	
D1	[R]	[+1]	≅∞Ω
	[+1]	[R]	≅0Ω
D2	[S]	[+1]	≅∞Ω
	[+1]	[S]	≅0Ω
D3	[T]	[+1]	≅∞Ω
	[+1]	[T]	≅0Ω
D4	[R]	[–]	≅0Ω
	[–]	[R]	≅∞Ω
D5	[S]	[–]	≅0Ω
	[–]	[S]	≅∞Ω
D6	[T]	[–]	≅0Ω
	[–]	[T]	≅∞Ω
TR1	[U]	[+]	≅∞Ω
	[+]	[U]	≅0Ω
TR2	[V]	[+]	≅∞Ω
	[+]	[V]	≅0Ω
TR3	[W]	[+]	≅∞Ω
	[+]	[W]	≅0Ω
TR4	[U]	[–]	≅0Ω
	[–]	[U]	≅∞Ω
TR5	[V]	[–]	≅0Ω
	[–]	[V]	≅∞Ω
TR6	[W]	[–]	≅0Ω
	[–]	[W]	≅∞Ω
TR7	[RB]	[+]	≅∞Ω
	[+]	[RB]	≅0Ω
	[RB]	[–]	≅∞Ω
	[–]	[RB]	≅∞Ω

Note The resistance values for the diodes or the transistors will not be exactly the same, but they will be close. If you find a significance difference, a problem may exist.

Note Before measuring the voltage between [+] and [–] with the DC current range, confirm that the smoothing capacitor is discharged fully, then execute the tests.

6-4-4 General Inverter Electrical Measurements

The following table specifies how to measure key system electrical parameters. The diagrams on the next page show inverter-motor systems and the location of measurement points for these parameters.

Parameter	Circuit location of measurement	Measuring instrument	Notes	Reference Value
Supply voltage E_1	E_R – across L1 and L2 E_S – across L2 and L3 E_T – across L3 and L1	Moving-coil type voltmeter or rectifier type voltmeter	Fundamental wave effective value	Commercial supply voltage 200 V class: 200-240 V, 50/60 Hz 400 V class: 380-460 V, 50/60 Hz
Supply current I_1	I_r - L1 I_s - L2 I_t - L3		Total effective value	–
Supply power W_1	W_{11} – across L1 and L2 W_{12} – across L2 and L3		Total effective value	–
Supply power factor Pf_1	$Pf_1 = \frac{W1}{\sqrt{3} \times E_1 \times I_1} \times 100\%$			–
Output voltage E_O	E_U – across U and V E_V – across V and W E_W – across W and U	Rectifier type voltmeter	Total effective value	–
Output current I_O	I_U - U I_V - V I_W - W	Moving-coil type ammeter	Total effective value	–
Output power W_O	W_{O1} – across U and V W_{O2} – across V and W	Electronic type wattmeter	Total effective value	–
Output power factor Pf_O	Calculate the output power factor from the output voltage E, output current I, and output power W. $Pf_0 = \frac{W_1}{\sqrt{3} \times E_0 \times I_0} \times 100\%$			–

Note 1 Use a meter indicating a fundamental wave effective value for voltage, and meters indicating total effective values for current and power.

Note 2 The inverter output has a distorted waveform, and low frequencies may cause erroneous readings. However, the measuring instruments and methods listed above provide comparably accurate results.

Note 3 A general-purpose digital volt meter (DVM) is not usually suitable to measure a distorted waveform (not pure sinusoid).

The figures below show measurement locations for voltage, current, and power measurements listed in the table on the previous page. The voltage to be measured is the fundamental wave effective voltage. The power to be measured is the total effective power.

Single-phase Measurement Diagram

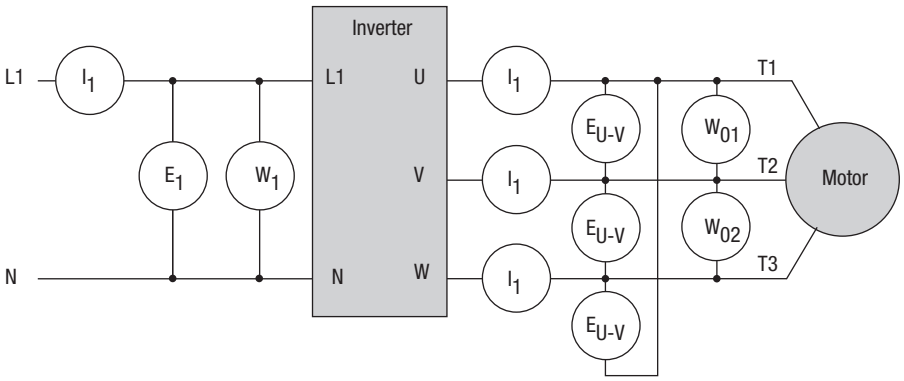

Three-phase Measurement Diagram

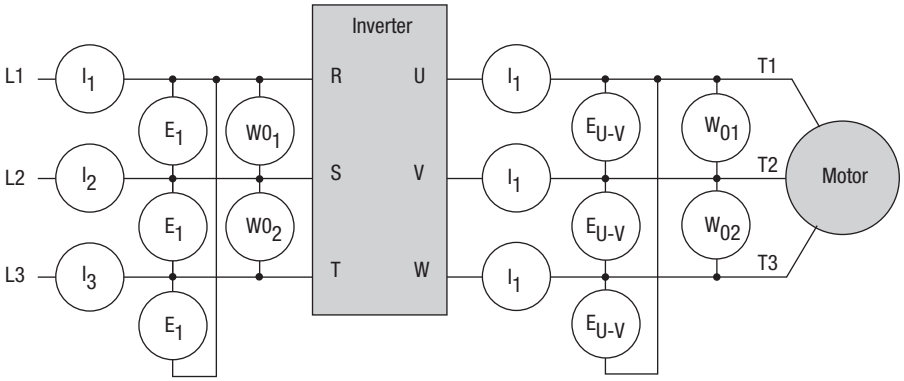

6-4-5 Inverter Output Voltage Measurement Techniques

Taking voltage measurements around drives equipment requires the right equipment and a safe approach. You are working with high voltages and high-frequency switching waveforms that are not pure sinusoids. Digital voltmeters will not usually produce reliable readings for these waveforms. And, it is usually risky to connect high voltage signals to oscilloscopes. The inverter output semiconductors have some leakage, and no-load measurements produce misleading results. So, we highly recommend using the following circuits to measure voltage for performing the equipment inspections.

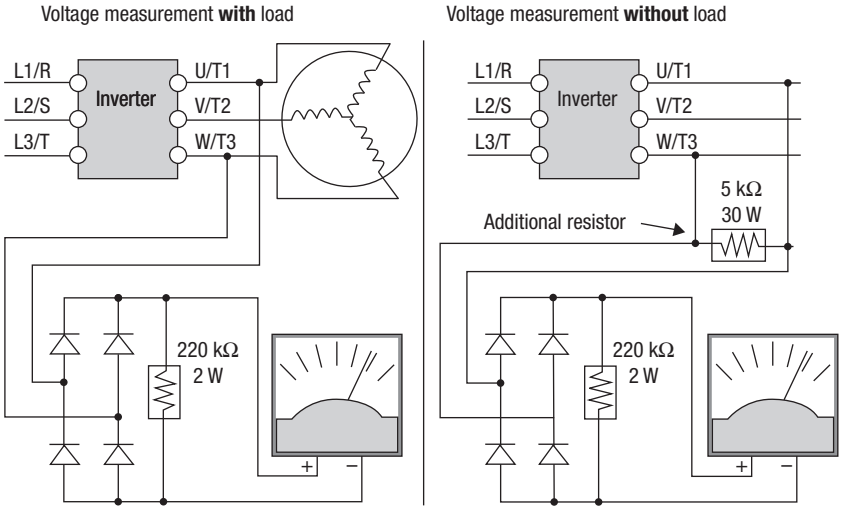

V Class	Diode Bridge	Voltmeter
200 V Class	600 V 0.01 A min.	300 V range
400 V Classs	100 V 0.1 A min.	600 V range

V Class	Diode Bridge	Voltmeter
200 V Class	600 V 0.01 A min.	300 V range
400 C Class	100 V 0.1 A min.	600 V range

⚠HIGH VOLTAGE Be careful not to touch wiring or connector terminals when working with the inverters and taking measurements. Be sure to place the measurement circuitry components above in an insulated housing before using them.

6-4-6 Capacitor Life Curves

The DC bus inside the inverter uses a large capacitor as shown in the diagram below. The capacitor handles high voltage and current as it smoothes the power for use by the inverter. So, any degradation of the capacitor will affect the performance of the inverter.

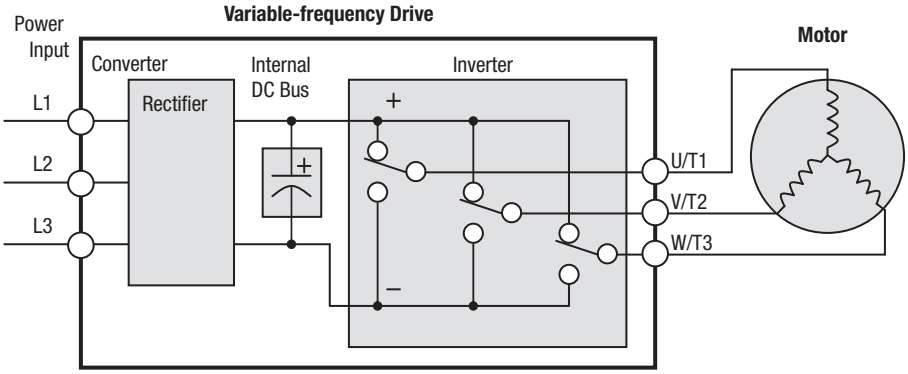

Capacitor life is reduced in higher ambient temperatures, as the graph below demonstrates. Under the condition of average ambient temperature 40°C, 80% load, 24 hours operation, the lifetime is 10 years. Be sure to keep the ambient temperature at acceptable levels, and perform maintenance inspections on the fan, heat sink, and other components. If the inverter is installed on a cabinet, the ambient temperature is the temperature inside the cabinet.

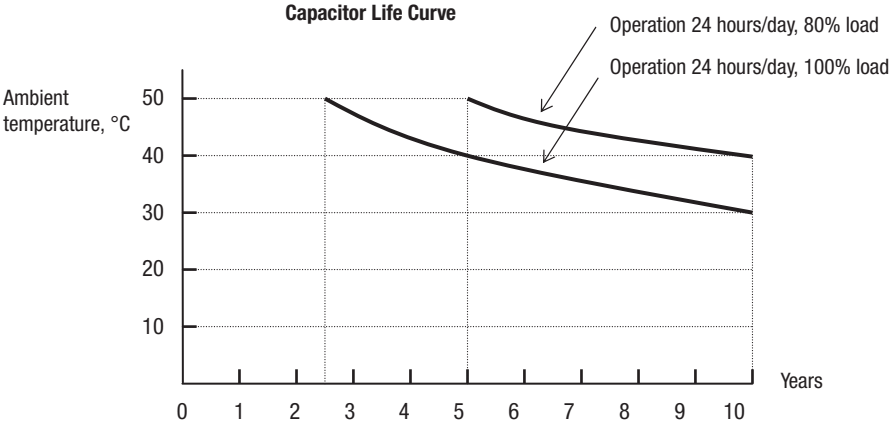

6-5 Warranty

6-5-1 Warranty Terms

The warranty period under normal installation and handling conditions is two (2) years from the date of manufacture, or one (1) year from the date of installation, whichever occurs first. The warranty shall cover the repair or replacement, at Omron's sole discretion, of ONLY the inverter that was installed.

1. Service in the following cases, even within the warranty period, shall be charged to the purchaser:
   a) Malfunction or damage caused by mis-operation or modification or improper repair
   b) Malfunction or damage caused by a drop after purchase and transportation
   c) Malfunction or damage caused by fire, earthquake, flood, lightening, abnormal input voltage, contamination, or other natural disasters
2. When service is required for the product at your work site, all expenses associated with field repair shall be charged to the purchaser.
3. Always keep this manual handy; please do not lose it. Please contact your Omron distributor to purchase replacement or additional manuals.

Appendix A
Glossary and Bibliography

A-1 Glossary

Ambient Temperature — The air temperature in the chamber containing a powered electronic unit. A unit's heat sinks rely on a lower ambient temperature in order to dissipate heat away from sensitive electronics.

Arrival Frequency — The arrival frequency refers to the set output frequency of the inverter for the constant speed setting. The arrival frequency feature turns on an output when the inverter reaches the set constant speed. The inverter has various arrival frequencies and pulsed or latched logic options.

Auto-tuning — The ability of a controller to execute a procedure that interacts with a load to determine the proper coefficients to use in the control algorithm. Auto-tuning is a common feature of process controllers with PID loops. Omron inverters feature auto tuning to determine motor parameters for optimal commutation. Auto-tuning is available as a special command from a digital operator panel. See also *Digital Operator Panel.*

Base Frequency — The power input frequency for which an AC induction motor is designed to operate. Most motors will specify a 50 to 60 Hz value. The OmronOmron inverters have a programmable base frequency, so you must ensure that parameter matches the attached motor. The term *base frequency* helps differentiate it from the carrier frequency. See also *Carrier Frequency* and *Frequency Setting.*

Braking Resistor — An energy-absorbing resistor that dissipates energy from a decelerating load. Load inertia causes the motor to act as a generator during deceleration. For the MX2 inverter models, the braking unit and braking resistor are optional (external) components. See also *Four-quadrant Operation* and *Dynamic Braking.*

Break-away Torque — The torque a motor must produce to overcome the static friction of a load, in order to start the load moving.

Carrier Frequency — The frequency of the constant, periodic, switching waveform that the inverter modulates to generate the AC output to the motor. See also *PWM.*

CE — A regulatory agency for governing the performance of electronic products in Europe. Drive installations designed to have CE approval must have particular filter(s) installed in the application.

Choke — An inductor that is tuned to react at radio frequencies is called a “choke,” since it attenuates (chokes) frequencies above a particular threshold. Tuning is often accomplished by using a movable magnetic core. In variable-frequency drive systems, a choke positioned around high-current wiring can help attenuate harmful harmonics and protect equipment. See also *Harmonics.*

DC Braking — The inverter DC braking feature stops the AC commutation to the motor, and sends a DC current through the motor windings in order to stop the motor. Also called “DC injection braking,” it has little effect at high speed, and is used as the motor is nearing a stop.

Deadband — In a control system, the range of input change for which there is no perceptible change in the output. In PID loops, the error term may have a dead band associated with it. Deadband may or may not be desirable; it depends on the needs of the application.

Digital Operator Panel For Omron inverters, “digital operator panel” (DOP) refers first to the operator keypad on the front panel of the inverter. It also includes hand-held remote keypads, which connect to the inverter via a cable. Finally, the DOP Professional is a PC-based software simulation of the keypad devices.

Diode A semiconductor device that has a voltage-current characteristic that allows current to flow only in one direction, with negligible leakage current in the reverse direction. See also *Rectifier.*

Duty Cycle

1. The percent of time a square wave of fixed frequency is ON (high) versus OFF (low).
2. The ratio of operating time of a device such as a motor to its resting time. This parameter usually is specified in association with the allowable thermal rise for the device.

Dynamic Braking For the MX2 inverter models, the braking unit and braking resistor are optional (external) components. The dynamic braking feature shunts the motor-generated EMF energy into a special braking resistor. The added dissipation (braking torque) is effective at higher speeds, having a reduced effect as the motor nears a stop.

Error In process control, the error is the difference between the desired value or setpoint (SP) and the actual value of a the process variable (PV). See also *Process Variable* and *PID Loop.*

EMI Electromagnetic Interference – In motor/drive systems, the switching of high currents and voltages creates the possibility of generating radiated electrical noise that may interfere with the operation of nearby sensitive electrical instruments or devices. Certain aspects of an installation, such as long motor lead wire lengths, tend to increase the chance of EMI. Omron provides accessory filter components you can install to decrease the level of EMI.

Four-quadrant operation Referring to a graph of torque versus direction, a four-quadrant drive can turn the motor either forward or reverse, as well as decelerate in either direction (see also reverse torque). A load that has a relatively high inertia and must move in both directions and change directions rapidly requires four-quadrant capability from its drive.

Free-run Stop A method of stopping a motor, caused when the inverter simply turns OFF its motor output connections. This may allow the motor and load to coast to a stop, or a mechanical brake may intervene and shorten the deceleration time.

Frequency Setting While frequency has a broad meaning in electronics, it typically refers to motor speed for variable-frequency drives (inverters). This is because the output frequency of the inverter is variable, and is proportional to the attained motor speed. For example, a motor with a base frequency of 60 Hz can be speed controlled with an inverter output varying form 0 to 60 Hz. See also *Base Frequency, Carrier Frequency,* and *Slip.*

Harmonics A *harmonic* is a whole number multiple of a base of fundamental frequency. The square waves used in inverters produce high frequency harmonics, even though the main goal is to produce lower-frequency sine waves. These harmonics can be harmful to electronics (including motor windings) and cause radiated energy that interferes with nearby electronic devices. Chokes, line reactors, and filters are sometimes used to suppress the transmission of harmonics in an electrical system. See also *Choke.*

Horsepower A unit of physical measure to quantify the amount of work done per unit of time. You can directly convert between horsepower and Watts as measurements of power.

IGBT — **Insulated Gate Bipolar Transistor** (IGBT) – A semiconductor transistor capable of conducting very large currents when in saturation and capable of withstanding very high voltages when it is OFF. This high-power bipolar transistor is the type used in Omron inverters.

Inertia — The natural resistance a stationary object to being moved by an external force. See also *Momentum.*

Intelligent Terminal — A configurable input or output logic function on the Omron inverters. Each terminal may be assigned one of several functions.

Inverter — A device that electronically changes DC to AC current through an alternating process of switching the input to the output, inverted and non-inverted. It contains three inverter circuits to generate 3-phase output to the motor.

Isolation Transformer — A transformer with 1:1 voltage ratio that provides electrical isolation between its primary and secondary windings. These are typically used on the power input side of the device to be protected. An isolation transformer can protect equipment from a ground fault or other malfunction of nearby equipment, as well as attenuate harmful harmonics and transients on the input power.

Jogging Operation — Usually done manually, a jog command from an operator's panel requests the motor/drive system to run indefinitely in a particular direction, until the machine operator ends the jog operation.

Jump Frequency — A jump frequency is a point on the inverter output frequency range that you want the inverter to skip around. This feature may be used to avoid a resonant frequency, and you can program up to three jump frequencies in the inverter.

Line Reactor — A three-phase inductor generally installed in the AC input circuit of an inverter to minimize harmonics and to limit short-circuit current.

Momentum — The physical property of a body in motion that causes it to remain in motion. In the case of motors, the rotor and attached load are rotating and possesses angular momentum.

Multi-speed Operation — The ability of a motor drive to store preset discrete speed levels for the motor, and control motor speed according to the currently selected speed preset. The Omron inverters have 16 preset speeds.

Motor Load — In motor terminology, motor load consists of the inertia of the physical mass that is moved by the motor and the related friction from guiding mechanisms. See also *Inertia.*

NEC — The National Electric Code is a regulatory document that governs electrical power and device wiring and installation in the United States.

NEMA — The National Electric Manufacturer's Association. NEMA Codes are a published series of device ratings standards. Industry uses these to evaluate or compare the performance of devices made by various manufacturers to a known standard.

Open-collector Outputs — A common logic-type discrete output that uses an NPN transistor that acts as a switch to a power supply common, usually ground. The transistor's collector is open for external connection (not connected internally). Thus, the output sinks external load current to ground.

Power Factor — A ratio that expresses a phase difference (timing offset) between current and voltage supplied by a power source to a load. A perfect power factor = 1.0 (no phase offset). Power factors less than one cause some energy loss in power transmission wiring (source to load).

PID Loop Proportional – Integral-Derivative – A mathematical model used for process control. A process controller maintains a process variable (PV) at a setpoint (SP) by using its PID algorithm to compensate for dynamic conditions and vary its output to drive the PV toward the desired value. For variable-frequency drives, the process variable is the motor speed. See also *Error.*

Process Variable A physical property of a process that is of interest because it affects the quality of the primary task accomplished by the process. For an industrial oven, temperature is the process variable. See also *PID Loop* and *Error.*

PWM Pulse-width modulation: A type of AC adjustable frequency drive that accomplishes frequency and voltage control at the output section (inverter) of the drive. The drive output voltage waveform is at a constant amplitude, and by "chopping" the waveform (pulsewidth- modulating), the average voltage is controlled. The chopping frequency is sometimes called the *Carrier Frequency.*

Reactance The impedance of inductors and capacitors has two components. The resistive part is constant, while the reactive part changes with applied frequency. These devices have a complex impedance (complex number), where the resistance is the real part and the reactance is the imaginary part.

Rectifier An electronic device made of one or more diodes that converts AC power into DC power. Rectifiers are usually used in combination with capacitors to filter (smooth) the rectified waveform to closely approximate a pure DC voltage source.

Regenerative Braking A particular method of generating reverse torque to a motor, an inverter will switch internally to allow the motor to become a generator and will either store the energy internally, deliver the braking energy back to the main power input, or dissipate it with a resistor.

Regulation The quality of control applied to maintain a parameter of interest at a desired value. Usually expressed as a percent (±) from the nominal, motor regulation usually refers to its shaft speed.

Reverse Torque The torque applied in the direction opposite to motor shaft rotation. As such, reverse torque is a decelerating force on the motor and its external load.

Rotor The windings of a motor that rotate, being physically coupled to the motor shaft. See also *Stator.*

Saturation Voltage For a transistor semiconductor device, it is in saturation when an increase in input current no longer results in an increase in the output current. The saturation voltage is the voltage drop across the device. The ideal saturation voltage is zero.

Sensorless Vector Control A technique used in some variable-frequency drives (featured in some other Omron inverter model families) to rotate the force vector in the motor without the use of a shaft position sensor (angular). Benefits include an increase in torque at the lowest speed and the cost savings from the lack of a shaft position sensor.

Setpoint (SP) The setpoint is the desired value of a process variable of interest. See also *Process Variable (PV)* and *PID Loop.*

Single-phase power An AC power source consisting of Hot and Neutral wires. An Earth Ground connection usually accompanies them. In theory, the voltage potential on Neutral stays at or near Earth Ground, while Hot varies sinusoidally above and below Neutral. This power source is named Single Phase to differentiate it from three-phase power sources. Some Omron inverters can accept single phase input power, but they all output three-phase power to the motor. See also *Three-phase.*

Slip The difference between the theoretical speed of a motor at no load (determined by its inverter output waveforms) and the actual speed. Some slip is essential in order to develop torque to the load, but too much will cause excessive heat in the motor windings and/or cause the motor to stall.

Squirrel Cage A “nick-name” for the appearance of the rotor frame assembly for an AC induction motor.

Stator The windings in a motor that are stationary and coupled to the power input of the motor. See also *Rotor.*

Tachometer

1. A signal generator usually attached to the motor shaft for the purpose of providing feedback to the speed controlling device of the motor.
2. A speed-monitoring test meter that may optically sense shaft rotation speed and display it on a readout.

Thermal Switch An electromechanical safety device that opens to stop current flow when the temperature at the device reaches a specific temperature threshold. Thermal switches are sometimes installed in the motor in order to protect the windings from heat damage. The inverter can use thermal switch signals to trip (shut down) if the motor overheats. See also *Trip.*

Thermistor A type of temperature sensor that changes its resistance according to its temperature. The sensing range of thermistors and their ruggedness make them ideal for motor overheating detection. Omron inverters have built-in thermistor input circuits, which can detect an overheated motor and shut off (trip) the inverter output.

Three-phase power An AC power source with three Hot connections that have phase offsets of 120 degrees is a 3-phase power source. Usually, Neutral and Earth Ground wires accompany the three Hot connections. Loads may be configured in a delta or Y configuration. A Y-connected load such as an AC induction motor will be a balanced load; the currents in all the Hot connections are the same. Therefore, the Neutral connection is theoretically zero. This is why inverters that generate 3-phase power for motors do not generally have a Neutral connection to the motor. However, the Earth Ground connection is important for safety reasons, and is provided.

Torque The rotational force exerted by a motor shaft. The units of measurement consist of the distance (radius from shaft center axis) and force (weight) applied at that distance. Units are usually given as pound-feet, ounce-inches, or Newton-meters.

Transistor A solid state, three-terminal device that provides amplification of signals and can be used for switching and control. While transistors have a linear operating range, inverters use them as high-powered switches. Recent developments in power semiconductors have produced transistors capable of handling high voltages and currents, all with high reliability. The saturation voltage has been decreasing, resulting in less heat dissipation. Omron inverters use state-of-the-art semiconductors to provide high performance and reliability in a compact package. See also *IGBT* and *Saturation Voltage.*

Trip Event An event that causes the inverter to stop operation is called a “trip” event (as in *tripping* a circuit breaker). The inverter keeps a history log of trip events. They also require an action to clear.

Watt Loss A measure of the internal power loss of a component, the difference between the power it consumes and what its output delivers. An inverter's watt loss is the input power minus the power delivered to the motor. The watt loss is typically highest when an inverter is delivering its maximum output. Therefore, watt loss is usually specified for a particular output level. Inverter watt loss specifications are important when designing enclosures.

A-2 Bibliography

Title	Author and Publisher
Variable Speed Drive Fundamentals, 2nd Ed.	Phipps, Clarence A. The Fairmont Press, Inc./Prentice-Hall, Inc. 1997
Electronic Variable Speed Drives	Brumbach, Michael E. Delmar Publishers 1997 ISBN 0-8273-6937-9

Appendix B
ModBus Network Communications

B-1 Introduction

MX2 Series inverters have built-in RS-485 serial communications, featuring the ModBus RTU protocol. The inverters can connect directly to existing factory networks or work with new networked applications, without any extra interface equipment. The specifications are in the following table.

Item	Specifications	User-selectable
Transmission speed	2400/4800/9600/19.2 k/38.4 k/ 57.6 k/76.8 k/115.2 k bps	✓
Communication mode	Asynchronous	×
Character code	Binary	×
LSB placement	Transmits LSB first	×
Electrical interface	RS-485 differential transceiver	×
Data bits	8-bit (ModBus RTU mode)	×
Parity	None/even/odd	✓
Stop bits	1 or 2 bits	✓
Startup convention	One-way start from host device	×
Wait time for response	0 to 1000 msec.	✓
Connections	Station address numbers from 1 to 247	✓
Connector	Terminal connector	–
Error check	Overrun, Framing block check code, CRC-16, or horizontal parity	–
Cable length	500m maximum	–

The network diagram below shows a series of inverters communicating with a host computer. Each inverter must have a unique address, from 1 to 247, on the network. In a typical application, a host computer or controller is the master and each of the inverter(s) or other devices is a slave.

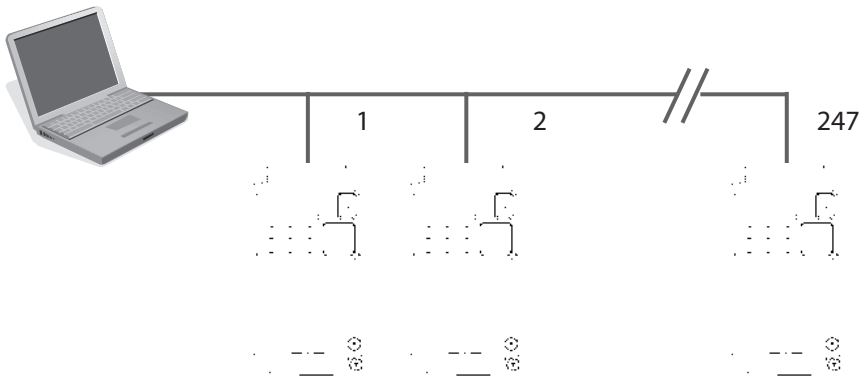

B-2 Connecting the Inverter to ModBus

Modbus connector is in control terminal block as below. Note that RJ45 connector (RS-422) is used for external operator only.

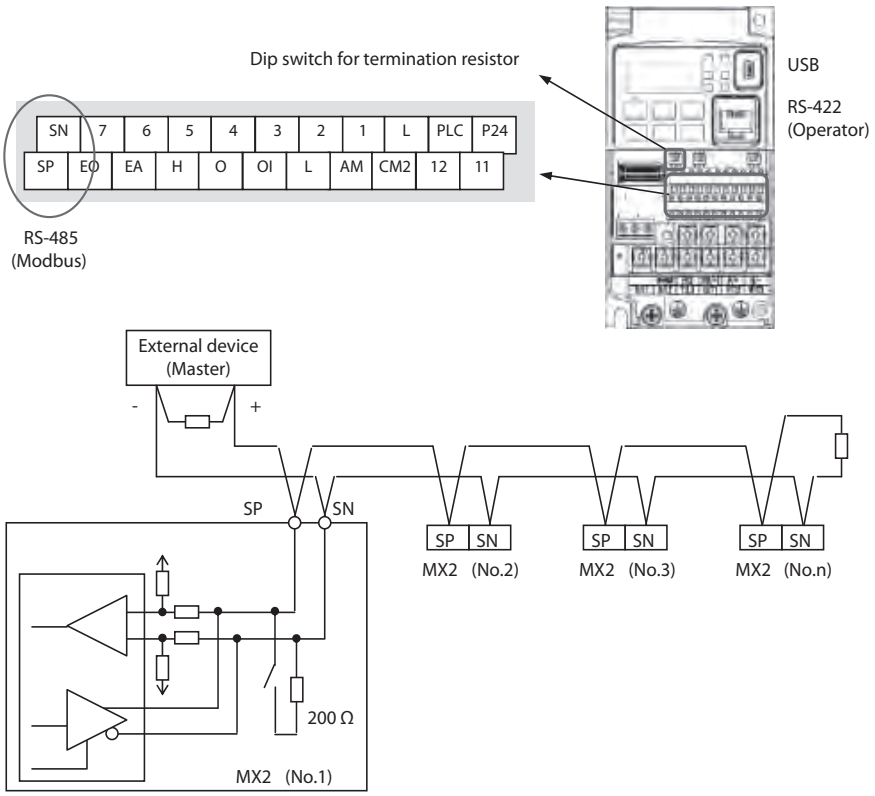

Terminate Network Wiring – The RS-485 wiring must be terminated at each physical end to suppress electrical reflections and help decrease transmission errors. MX2 has a built-in 200 resistor activated by a dip switch. Select termination resistors that match the characteristic impedance of the network cable. The diagram above shows a network with the needed termination resistor at each end.

Inverter Parameter Setup – The inverter has several settings related to ModBus communications. The table below lists them together. The *Required* column indicates which parameters must be set properly to allow communications. You may need to refer to the host computer documentation in order to match some of its settings.

Func. Code	Name	Required	Settings
A001	Frequency reference selection	✓	00 Digital operator 01 Terminal 02 Operator **03 ModBus communication** 10 Operation function result
A002	Run command selection	✓	01 Terminal 02 Operator **03 ModBus communication**
C071	Communication speed selection (Baud rate selection)	✓	03 2400 bps 04 4800 bps 05 9600 bps 06 19.2 k bps 07 38.4 k bps 08 57.6 k bps 09 76.8 k bps 10 115.2 k bps
C072	Communication station No. Selection	✓	Network address, range is 1 to 247
C074	Communication parity selection	✓	00 No parity 01 Even 02 Odd
C075	Communication stop bit selection	✓	Range is 1 or 2
C076	Communication error selection	–	00 Trip 01 Decel-Trip (Trip after deceleration stop) 02 Ignore 03 Free-RUN (Free-run stop) 04 Decel-Stop (Deceleration stop)
C077	Communication error timeout	–	Comm. Watchdog timer period, range is 0.00 to 99.99 sec.
C078	Communication wait time	✓	Time the inverter waits after receiving a message before it transmits. Range is 0 to 1000 ms
P200	Serial comms mode	✓	00 Standard 01 Free mapping
P201 to P210	Modbus external register 1 to 10	✓	Range is 0000h to FFFFh
P211 to P220	Modbus register format 1 to 10	✓	00 Unsigned 01 Signed
P221 to P230	Modbus register scaling 1 to 10	✓	Range is 0.001 to 65.535
P301 to P310	Modbus internal register 1 to 10	✓	Range is 0000h to FFFFh
P400	Big/Little endian selection	✓	00 Big endian 01 Little endian 02 Special endian

Note When you change any of the parameters above, the inverter power must be rebooted in order to activate new parameters. Instead of rebooting, turning ON/OFF of reset terminal works as same.

B-3 Network Protocol Reference

B-3-1 Transmission procedure

The transmission between the external control equipment and the inverter takes the procedure below.

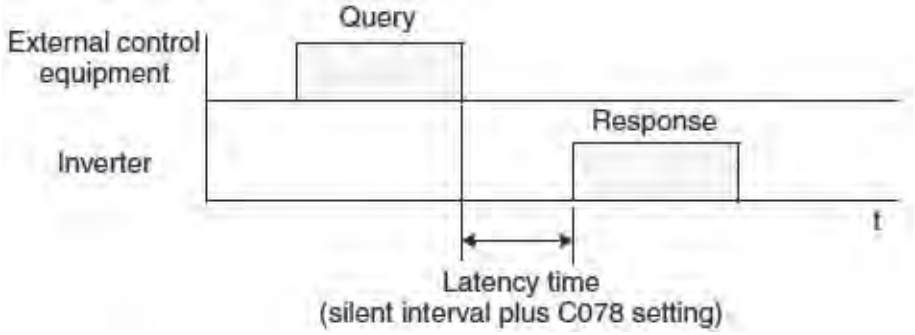

- Query - A frame sent from the external control equipment to the inverter
- Response - A frame returned from inverter to the external control equipment

The inverter returns the response only after the inverter receives a query from the external control equipment and does not output the response positively. Each frame is formatted (with commands) as follows:

Frame Format
Header (silent interval)
Slave address
Function code
Data
Error check
Trailer (silent interval)

B-3-2 Message Configuration: Query

Slave address:

- This is a number of 1 to 32 assigned to each inverter (slave). (Only the inverter having the address given as a slave address in the query can receive the query.)
- When slave address “0” is specified, the query can be addressed to all inverters simultaneously. (Broadcasting)
- In broadcasting, you cannot call and loop back data.
- Slave Address 1-247 in Modbus specification. When master address the slave 250-254, broadcast toward specific slave address. Slave doesn't answer back. And this function is valid for the write command (05h, 06h, 0Fh, 10h)

Slave address	Broadcast to
250 (FAh)	Broadcast to Slave address 01 to 09
251 (FBh)	Broadcast to Slave address 10 to 19
252 (FCh)	Broadcast to Slave address 20 to 29
253 (FDh)	Broadcast to Slave address 30 to 39
254 (FEh)	Broadcast to Slave address 40 to 247

Data:

- A function command is set here.
- The data format used in the MX2 series is corresponding to the Modbus data format below.

Name of Data	Description
Coil	Binary data that can be referenced and changed (1 bit long)
Holding Register	16-bit data that can be referenced and changed

Function code:

Specify a function you want to make the inverter execute. Function codes available to the MX2 series are listed below.

Function Code	Function	Maximum data size (bytes available per message)	Maximum number of data elements available per message
01h	Read Coil Status	4	32 coils (in bits)
03h	Read Holding Register	32	16 registers (in bytes)
05h	Write in Coil	2	1 coil (in bits)
06h	Write in Holding Register	2	1 register (in bytes)
08h	Loopback Test	–	–
0Fh	Write in Coils	4	32 coils (in bits)
10h	Write in Registers	32	16 registers (in bytes)
17h	Read/Write Holding Registor	32	16 registers (in bytes)

Error check:

Modbus-RTU uses CRC (Cyclic Redundancy Check) for error checking.

- The CRC code is 16-bit data that is generated for 8-bit blocks of arbitrary length.
- The CRC code is generated by a generator polynomial CRC-16 (X16+ X15+ X2+ 1).

Header and trailer (silent interval):

Latency is the time between the reception of a query from the master and transmission of a response from the inverter.

- 3.5 characters (24 bits) are always required for latency time. If the latency time shorter than 3.5 characters, the inverter returns no response.
- The actual transmission latency time is the sum of silent interval (3.5 characters long) + C078 (transmission latency time).

B-3-3 Message Configuration: Response

Transmission time required:

- A time period between reception of a query from the master and transmission of a response from the inverter is the sum of the silent interval (3.5 characters long) + C078 (transmission latency time).
- The master must provide a time period of the silent interval (3.5 characters long or longer) before sending another query to an inverter after receiving a response from the inverter.

Normal response:

- When receiving a query that contains a function code of Loopback (08h), the inverter returns a response of the same content of the query.
- When receiving a query that contains a function code of Write in Register or Coil (05h, 06h, 0Fh, or 10h), the inverter directly returns the query as a response.
- When receiving a query that contains a function code of Read Register or Coil (01h or 03h), the inverter returns, as a response, the read data together with the same slave address and function code as those of the query.

Response when an error occurs:

- When finding any error in a query (except for a transmission error), the inverter returns an exception response without executing anything.
- You can check the error by the function code in the response. The function code of the exception response is the sum of the function code of the query and 80h.
- The content of the error is known from the exception code.

Field Configuration
Slave address
Function code
Exception code
CRC-16

Exception Code	Description
01h	The specified function is not supported.
02h	The specified function is not found.
03h	The format of the specified data is not acceptable.
21h	The data to be written in a holding register is outside the inverter.
22h	The specified functions are not available to the inverter. • Function to change the content of a register that cannot be changed while the inverter is in service • Function to submit an ENTER command during running (UV) • Function to write in a register during tripping (UV) • Function to change the I/O terminal configuration which is not allowed. • Function to change active state of RS (reset) terminal • Function to write in a register during auto-tuning • Function to write in a register locked by password
23h	• The register (or coil) to be written in is read-only

No response occurs:

In the cases below, the inverter ignores a query and returns no response.

- When receiving a broadcasting query
- When detecting a transmission error in reception of a query
- When the slave address set in the query is not equal to the slave address of the inverter
- When a time interval between data elements constituting a message is shorter than 3.5 characters
- When the data length of the query is invalid
- When broadcast message received.

Note Provide a timer in the master and make the master retransmit the same query when no response is made within a preset time period after the preceding query was sent.

B-3-4 Explanation of function codes

Read Coil Status [01h]:

This function reads the status (ON/OFF) of selected coils. An example follows below.

- Read intelligent input terminals [1] to [5] of an inverter having a slave address “8.”
- This example assumes the intelligent input terminals have terminal states listed below.

Item	Data				
Intelligent input terminal	[1]	[2]	[3]	[4]	[5]
Coil number	7	8	9	10	11
Coil Status	ON	OFF	ON	OFF	OFF

Query:

No.	Field Name	Example (Hex)
1	Slave address *1	08
2	Function code	01
3	Coil start address *4 (high order)	00
4	Coil start address *4 (low order)	06
5	Number of coils (high order *2)	00
6	Number of coils (low order *2)	05
7	CRC-16 (high order)	1C
8	CRC-16 (low order)	91

Response:

No.	Field Name	Example (Hex)
1	Slave address	08
2	Function code	01
3	Data size (in bytes)	01
4	Coil data *3	05
5	CRC-16 (high order)	92
6	CRC-16 (low order)	17

Note 1 Broadcasting is disabled.

Note 2 When 0 or more than 31 is specified as a number of coils, error code “03h” is returned.

Note 3 Data is transferred by the specified number of data bytes (data size).

Note 4 The PDU Coils are addressed starting at zero. Therefore coils numbered 1-31 are addressed as 0-30. Coil address value (transmitted on Modbus line) is 1 less than the Coil Number.

- The data set in the response shows terminal state of coils 0007h~000Dh.
- Data “05h=00000101b” indicates the following assuming coil 7 is the LSB.

Item	Data							
Coil Number	14	13	12	11	10	9	8	7
Coil Status	OFF	OFF	OFF	OFF	OFF	ON	OFF	ON

- When a read coil is outside the defined coils, the final coil data to be transmitted contains “0”as the status of the coil outside the range.
- When the Read Coil Status command cannot be executed normally, see the exception response.

Read Holding Register [03h]:

This function reads the contents of the specified number of consecutive holding registers (of specified register addresses). An example follows below.

- Reading Trip monitor 1 factor and trip frequency, current, and voltage from an inverter having a slave address “1”
- This example assumes the previous three trip factors are as follows:

MX2 Command	d081 (factor)	d081 (frequency)	d081 (output current)	d081 (DC-bus Voltage)
Register Number	0012h	0014h	0016h	0017h
Trip factor	Over-Current (E03)	9.9Hz	3.0A	284V

Query:

No.	Field Name	Example (Hex)
1	Slave address *1	01
2	Function code	03
3	Register start address *3 (high order)	00
4	Register start address *3 (low order)	11
5	Number of holding registers (high order)	00
6	Number of holding registers (low order)	06
7	CRC-16 (high order)	95
8	CRC-16 (low order)	CD

Response:

No.	Field Name	Example (Hex)
1	Slave address	01
2	Function code	03
3	Data size (in bytes) *2	0C
4	Register data 1 (high order)	00
5	Register data 1 (high order)	03
6	Register data 2 (high order)	00
7	Register data 2 (low order)	00
8	Register data 3 (high order)	00
9	Register data 3 (low order)	63
10	Register data 4 (high order)	00
11	Register data 4 (low order)	00
12	Register data 5 (high order)	00
13	Register data 5 (low order)	1E
14	Register data 6 (high order)	01
15	Register data 6 (low order)	1C
16	CRC-16 (high order)	AF
17	CRC-16 (low order)	6D

Note 1 Broadcasting is disabled.

Note 2 Data is transferred by the specified number of data bytes (data size). In this case, 6 bytes are used to return the content of three holding registers.

Note 3 The PDU Register Number are addressed starting at zero. Therefore register numbered “0012h” are addressed as “0011h”. Register address value (transmitted on Modbus line) is 1 less than the Register Number.

The data set in the response is as follows:

Response Buffer	**4-5**		**6-7**		**8-9**	
Register Number	12+0 (high order)	12+0 (low order)	12+1 (high order)	12+1 (low order)	12+2 (high order)	12+2 (low order)
Register Data	0003h		00h	00h	0063h	
Trip data	Trip factor (E03)		Not used		Frequency (9.9Hz)	
Response Buffer	**10-11**		**12-13**		**14-15**	
Register Number	12+3 (high order)	12+3 (low order)	12+4 (high order)	12+4 (low order)	12+5 (high order)	12+5 (low order)
Register Data	00h	00h	001Eh		011Ch	
Trip data	Not used		Output current (3.0A)		DC-bus voltage (284V)	

When the Read Holding Register command cannot be executed normally, refer to the exception response.

Write in Coil [05h]:

This function writes data in a single coil. Coil status changes are as follows:

Data	**Coil Status**	
	OFF to ON	ON to OFF
Change data (high order)	FFh	00h
Change data (low order)	00h	00h

An example follows (note that to command the inverter, set A002=03):

- Sending a RUN command to an inverter having slave address “8”
- This example writes in coil number “1.”

Query:

No.	**Field Name**	**Example (Hex)**
1	Slave address *1	08
2	Function code	05
3	Coil start address *2 (high order)	00
4	Coil start address *2 (low order)	00
5	Change data (high order)	FF
6	Change data (low order)	00
7	CRC-16 (high order)	8C
8	CRC-16 (low order)	A3

Response:

No.	**Field Name**	**Example (Hex)**
1	Slave address	08
2	Function code	05
3	Coil start address *2 (high order)	00
4	Coil start address *2 (low order)	00
5	Change data (high order)	FF
6	Change data (low order)	00
7	CRC-16 (high order)	8C
8	CRC-16 (low order)	A3

Note 1 No response is made for a broadcasting query.

Note 2 The PDU Coils are addressed starting at zero. Therefore coils numbered 1-31 are addressed as 0-30. Coil address value (transmitted on Modbus line) is 1 less than the Coil Number.

When writing in a selected coil fails, see the exception response.

Write in Holding Register [06h]:

This function writes data in a specified holding register. An example follows:

- Write “50 Hz” as the first Multi-speed 0 (A020) in an inverter having slave address “5.”
- This example uses change data “500 (1F4h)” to set “50 Hz” as the data resolution of the register “1029h” holding the first Multi-speed 0 (A020) is 0.1 Hz

Query:

No.	Field Name	Example (Hex)
1	Slave address *1	08
2	Function code	06
3	Register start address *2 (high order)	10
4	Register start address *2 (low order)	28
5	Change data (high order)	01
6	Change data (low order)	F4
7	CRC-16 (high order)	0D
8	CRC-16 (low order)	8C

Response:

No.	Field Name	Example (Hex)
1	Slave address	08
2	Function code	06
3	Register start address *2 (high order)	10
4	Register start address *2 (low order)	28
5	Change data (high order)	01
6	Change data (low order)	F4
7	CRC-16 (high order)	0D
8	CRC-16 (low order)	8C

Note 1 No response is made for a broadcasting query.

Note 2 The PDU Register Number are addressed starting at zero. Therefore register numbered “1029h” are addressed as “1028h”. Register address value (transmitted on Modbus line) is 1 less than the Register Number.

When writing in a selected holding register fails, see the exception response.

Loopback Test [08h]:

This function checks a master-slave transmission using any test data. An example follows:

- Send test data to an inverter having slave address “1” and receiving the test data from the inverter (as a loopback test).

Query:

No.	Field Name	Example (Hex)
1	Slave address *1	01
2	Function code	08
3	Test subcode (high order)	00
4	Test subcode (low order)	00
5	Data (high order)	Any
6	Data (low order)	Any
7	CRC-16 (high order)	CRC
8	CRC-16 (low order)	CRC

Response:

No.	Field Name	Example (Hex)
1	Slave address *1	01
2	Function code	08
3	Test subcode (high order)	00
4	Test subcode (low order)	00
5	Data (high order)	Any
6	Data (low order)	Any
7	CRC-16 (high order)	CRC
8	CRC-16 (low order)	CRC

Note 1 Broadcasting is disabled.

When test subcode is for echo (00h, 00h) only and not available to the other commands.

Write in Coils [0Fh]:

This function writes data in consecutive coils. An example follows:

- Change the state of intelligent input terminal [1] to [5] of an inverter having a slave address “8.”
- This example assumes the intelligent input terminals have terminal states listed below.

Item	Data				
Intelligent input terminal	[1]	[2]	[3]	[4]	[5]
Coil Number	7	8	9	10	11
Terminal status	ON	ON	ON	OFF	ON

Query:

No.	Field Name	Example (Hex)
1	Slave address *1	08
2	Function code	0F
3	Coil start address *3 (high order)	00
4	Coil start address *3 (low order)	06
5	Number of coils (high order)	00
6	Number of coils (low order)	05
7	Byte number *2	02
8	Change data (high order)	17
9	Change data (low order)	00
10	CRC-16 (high order)	83
11	CRC-16 (low order)	EA

Response:

No.	Field Name	Example (Hex)
1	Slave address	08
2	Function code	0F
3	Coil start address *3 (high order)	00
4	Coil start address *3 (low order)	06
5	Number of coils (high order)	00
6	Number of coils (low order)	05
7	CRC-16 (high order)	75
8	CRC-16 (low order)	50

Note 1 Broadcasting is disabled.

Note 2 The change data is a set of high-order data and low-order data. So when the size (in bytes) of data to be changed is an odd start coil number (“7”), add “1” to the data size (in bytes) to make it an even number.

Note 3 The PDU Coils are addressed starting at zero. Therefore coils numbered 1-31 are addressed as 0-30. Coil address value (transmitted on Modbus line) is 1 less than the Coil Number.

Write in Holding Registers [10h]:

This function writes data in consecutive holding registers. An example follows:

- Write “3000 seconds” as the first acceleration time 1 (F002) in an inverter having a slave address “8.”
- This example uses change data “300000 (493E0h)” to set “3000 seconds” as the data resolution of the registers “1014h” and “1015h” holding the first acceleration time 1 (F002) is 0.01 second.

No.	Field Name	Example (Hex)
1	Slave address *1	08
2	Function code	10
3	Start address *3 (high order)	10
4	Start address *3 (low order)	13
5	Number of holding registers (high order)	00
6	Number of holding registers (low order)	02
7	Byte number *2	04
8	Change data 1 (high order)	00
9	Change data 1 (low order)	04
10	Change data 2 (high order)	93
11	Change data 2 (low order)	E0
12	CRC-16 (high order)	7D
13	CRC-16 (low order)	53

No.	Field Name	Example (Hex)
1	Slave address	08
2	Function code	10
3	Start address *3 (high order)	10
4	Start address *3 (low order)	13
5	Number of holding registers (high order)	00
6	Number of holding registers (low order)	02
7	CRC-16 (high order)	B4
8	CRC-16 (low order)	54

Note 1 Broadcasting is disabled.

Note 2 This is not the number of holding registers. Specify the number of bytes of data to be changed.

Note 3 The PDU Register Number are addressed starting at zero. Therefore register numbered “1014h” are addressed as “1013h”. Register address value (transmitted on Modbus line) is 1 less than the Register Number.

When writing in selected holding registers fails, see the exception response.

Write in Holding Registers [17h]:

This function is to read and write data in consecutive holding registers. An example follows:

- Write “50.0 Hz” as the set frequency (F001) in an inverter having a slave address “1” and then to read out the output frequency (d001).

No.	Field Name	Example (Hex)
1	Slave address *1	01
2	Function code	17
3	Start address to read *3 (high order)	10
4	Start address to read *3 (low order)	00
5	Number of holding registers to read (high order)	00
6	Number of holding registers to read (low order)	02
7	Start address to write *3 (high order)	00
8	Start address to write *3 (low order)	00
9	Number of holding registers to write (high order)	00
10	Number of holding registers to write (low order)	02
11	Byte number to write*2	04
12	Change data 1 (high order)	00
13	Change data 1 (low order)	00
14	Change data 2 (high order)	13
15	Change data 2 (low order)	88
16	CRC-16 (high order)	F4
17	CRC-16 (low order)	86

No.	Field Name	Example (Hex)
1	Slave address	01
2	Function code	17
3	Byte number n	04
4	Register Data 1 (high order)	00
5	Register Data 1 (low order)	00
6	Register Data 2 (high order)	13
7	Register Data 2 (low order)	88
8	CRC-16 (high order)	F4
9	CRC-16 (low order)	71

Note 1 Register address value (transmitted on Modbus line) is 1 less than the Register Number.

When writing in selected holding registers fails, see the exception response.

Exception Response:

When sending a query (excluding a broadcasting query) to an inverter, the master always requests a response from the inverter. Usually, the inverter returns a response according to the query. However, when finding an error in the query, the inverter returns an exception response. The exception response consists of the fields shown below.

Field Configuration
Slave address
Function code
Exception code
CRC-16

The content of each field is explained below. The function code of the exception response is the sum of the function code of the query and 80h. The exception code indicates the factor of the exception response.

Function Code	
Query	**Exception Response**
01h	81h
03h	83h
05h	85h
06h	86h
0Fh	8Fh
10h	90h

Exception Code	
Code	**Description**
01h	The specified function is not supported.
02h	The specified function is not found.
03h	The format of the specified data is not acceptable.
21h	The data to be written in a holding register is outside the inverter.
22h	• The specified functions are not available to the inverter. • Function to change the content of a register that cannot be changed while the inverter is in service • Function to submit an ENTER command during running (UV) • Function to write in a register during tripping (UV) • Function to write in a read-only register (or coil)

B-3-5 Store New Register Data (ENTER Command)

After being written in a selected holding register by the Write in Holding Register command (06h) or in selected holding registers by the Write in Holding Registers command (10h), new data is temporary and still outside the storage element of the inverter. If power to the inverter is shut off, this new data is lost and the previous data returns. The ENTER command is used to store this new data in the storage element of the inverter. Follow the instructions below to submit the ENTER command.

Submitting an ENTER Command:

- Write any data in all memory (of a holding register at 0900h) by the Write in Holding Register command [06h].

Note The ENTER command takes much time to run. You can check its progress by monitoring the Data Writing signal (of a coil at 0049h).

Note The service life of the storage element of the inverter is limited (to about 100,000 write operations). Frequent use of the ENTER command may shorten its service life.

EEPROM Write Mode

- If the holding register write command (06h), etc. is used to write “1” into the holding register for EEPROM write mode (0902h), the EEPROM write mode is cancelled.

Difference between ENTER Command and EEPROM Write Mode

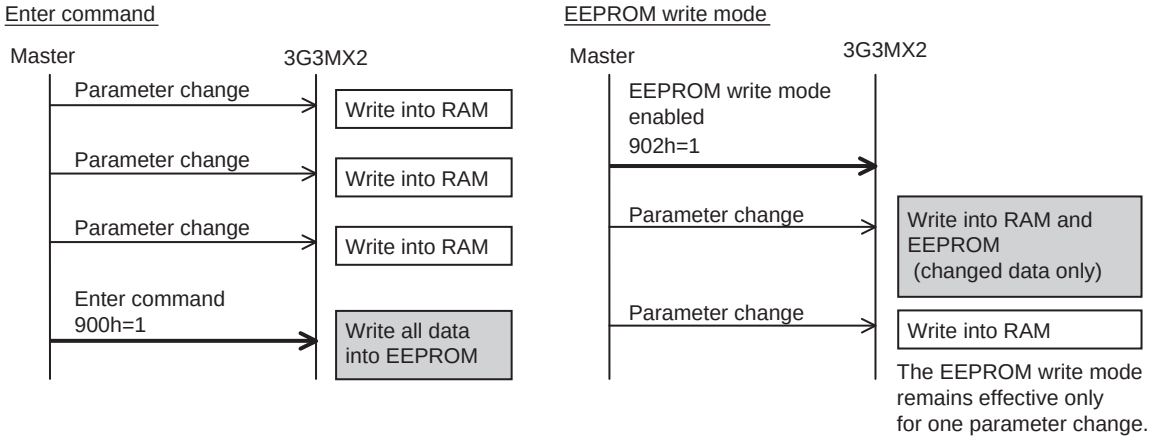

B-3-6 EzCOM (Peer-to-Peer communication)

- Besides standard Modbus-RTU communication (slave), MX2 supports Peer-to-Peer communication between multiple inverters.
- The max. number of inverter in the network is up to 247 (32 without repeater).
- One administrator inverter is necessary in the network, and the other inverters behave as master or slave.
- Be sure to set station No.1 as an administrator inverter, which controls master inverter according to user setting. The others will be slave inverters. An admin. inverter is fixed, but a master inverter always turns by rotation. For this reason, an admin. inverter can be a master or a slave.
- A master inverter is able to write data to any holding register of designated slave inverter. The max. number of holding register is up to 5. After writing data completed, a master inverter will be shift to the next inverter.

The max. number of master inverter is 8.

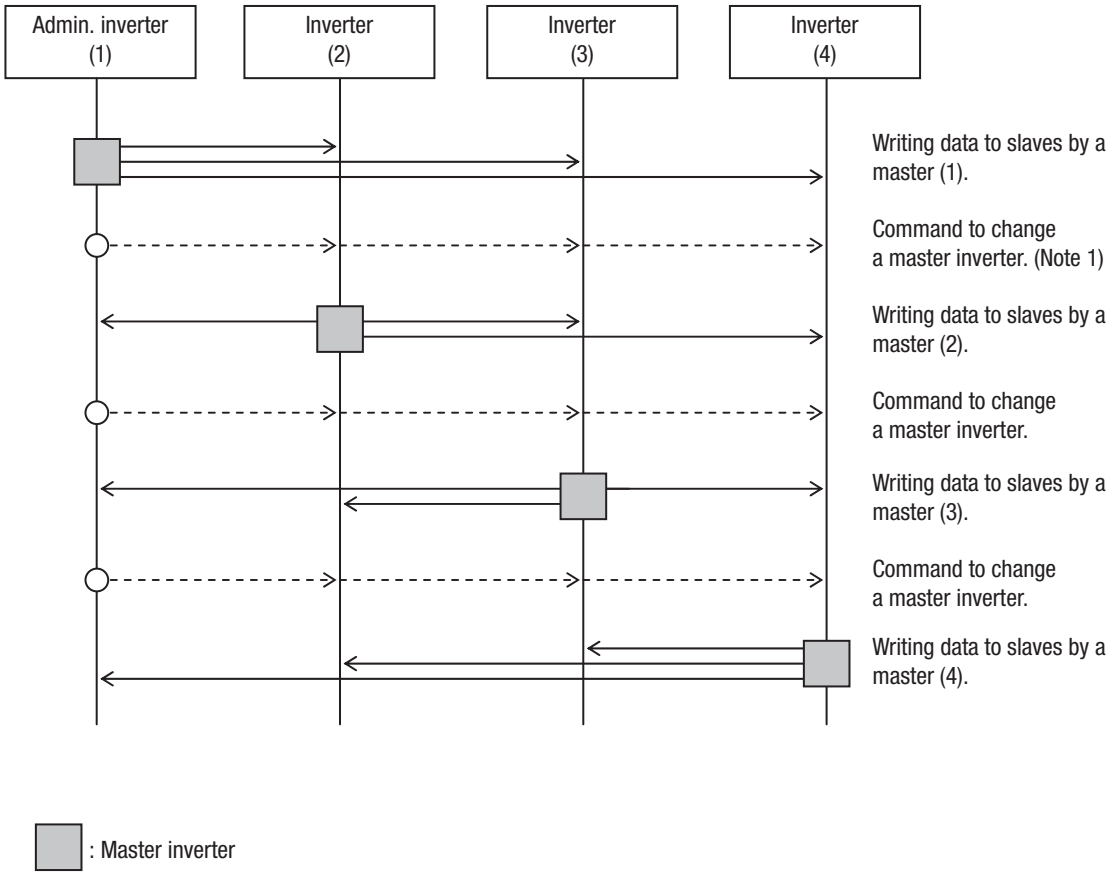

Note 1 The command to change a master is issued by an admin. inverter automatically, which users do not have to take care.

Note 2 The command to change a master from 01 to 02 is issued after the data is sent from master inverter 01 to slave and communication wait time (C078) passed.

Note 3 Administrator inverter issues the next command to change a master after the data from master inverters is sent and communication wait time (C078) passed. In case the data from master inverter cannot be received within the communication error timeout (C077), then the inverter timeouts and the behaves according to the communication error selection.

Note 4 Please set the communication error timeout as it is valid (C077=0.01~99.99). If it is disabled (C077=0.0), EzCOM function is interrupted in case the data from master inverter was not received. In case it is interrupted, please turn on/off the power or reset (reset terminal on/off).

Func. code	Name	Data/Range	For	Description
C072	Communication station No. Selection	1 to 247	ALL	Network address
C076	Communication error selection	00	ALL	Trip
		01	ALL	Trip after deceleration stop
		02	ALL	Ignore
		03	ALL	Free-run stop
		04	ALL	Deceleration stop
C077	Communication error timeout	0.00	ALL	Disabled
		0.01~99.99	ALL	[sec.]
C078	Communication wait time	0~1000	ALL	[ms]
C096	Communication selection	00	–	Modbus-RTU
		01	B	EzCOM
		02	A	EzCOM (admin)
C098	EzCOM start adr. of master	1 to 8	A	
C099	EzCOM end adr. of master	1 to 8	A	
C100	EzCOM starting trigger	00	A	485 input
		01	A	Always ON
P140	EzCOM number of data	1 to 5	M	
P141	EzCOM destination 1 address	1 to 247	M	(Note 3)
P142	EzCOM destination 1 register	0000 to FFFF	M	
P143	EzCOM source 1 register	0000 to FFFF	M	
P144	EzCOM destination 2 address	1 to 247	M	
P145	EzCOM destination 2 register	0000 to FFFF	M	
P146	EzCOM source 2 register	0000 to FFFF	M	
P147	EzCOM destination 3 address	1 to 247	M	
P148	EzCOM destination 3 register	0000 to FFFF	M	
P149	EzCOM source 3 register	0000 to FFFF	M	
P150	EzCOM destination 4 address	1 to 247	M	
P151	EzCOM destination 4 register	0000 to FFFF	M	
P152	EzCOM source 4 register	0000 to FFFF	M	
P153	EzCOM destination 5 address	1 to 247	M	
P154	EzCOM destination 5 register	0000 to FFFF	M	
P155	EzCOM source 5 register	0000 to FFFF	M	
C001~ C007	Multi-function input 1 selection	81	A	485: start EzCOM

Which parameters to be set?

ALL : Set all inverters in the network.

A : Set admin. inverter (address=1) only.

B : Set all inverters except admin. inverter.

M : Set master inverters configured in C098 to C099 of admin. inverter.

Note 5 Address of Administrative inverter is to be set 01 (C072=01).

Note 6 When selection of operation after communication error is set other than “ignoring errors (C076=02)”, EzCOM function is interrupted in case of com-

munication timeout on administrative inverter. In this case, please power off/on or reset (on/off RES terminal) to recover.

Note 7 If EzCOM starting trigger is set as input terminal (C100=00), be sure to configure 81 in one of input terminals.

Note 8 If EzCOM starting trigger is set as always (C100=01), administrative inverter starts to send the data immediately after power on. In case the establishment of the inverter to be assigned as master of delays and fail to receive the command to change the master, the data cannot be sent from master and administrative inverter time-outs. When C100=01 selected, please be sure to power up the administrative inverter at last after reconfirming the establishment of inverters other than administrative inverters.

Note 9 Although slave addresses are set in a master inverter, data is sent as broadcast address (00). If a slave inverter receives data to another slave, it will be ignored.

Note 10 As EzCOM source and destination register, please set the number minus one from the value listed in the table in “modbus data listing”.

Note 11 Just 0901h should be mention.

Note 12 If above parameter is changed, the inverter power must be rebooted in order to activate new parameters. Instead of rebooting, turning ON/OFF of reset terminal works as same.

Basic function (in case the number of data is 1 (P140=1))

- A master inverter sends data in holding register P143 of the master to a slave inverter of address P141 and overwrites on holding register P142.
- A master inverter is changed to the next inverter, and repeats same procedure according to setting of new master inverter.

Inverter-Inverter Communication Operation

1. The Master Inverter sends data to each slave inverter according to the items set in the Master Inverter.
2. The Management Inverter sends a master switching command and the Master Inverter changes.
3. The next Master Inverter sends data to each slave inverter in the same manner as in 1st point.
4. The 2nd and the 3st points are repeated.

Note Since the Inverter communication is performed in the form of broadcasting (station number: 00), all communication data are sent to all stations. Accordingly, while a slave not specified as the recipient of the Master also receives data, if the data is not addressed to that slave the data will be discarded in the slave.

Example of Inverter-Inverter Communications Sequence

Shown below is a communication sequence involving a total of four inverters from station numbers 01 to 04, where the Master Inverter is one of 01 to 03.

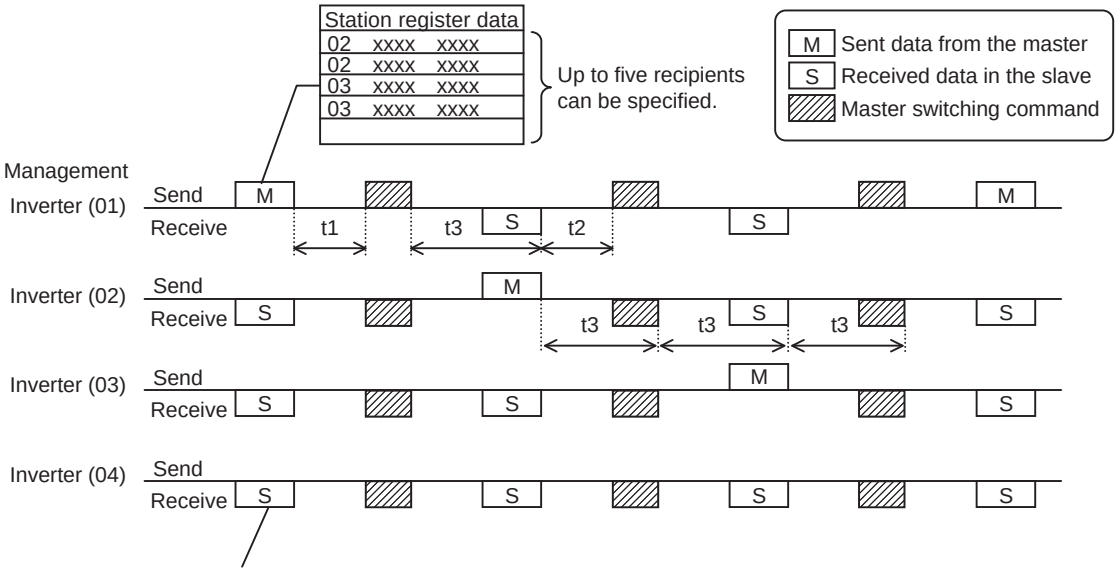

- For the Management Inverter, be sure to set a value other than 0 (1 second or more is recommended) in Communication Error Timeout (C077). When 0 is set, the Co-inverter communication function will stop if the data sent from the Master Inverter cannot be received. If the function has stopped, reconnect the Management Inverter or perform a reset (by turning the RS terminal ON and then turning it OFF).
- The communication timeout timer starts counting when the recipient starts waiting for data. If data reception is not completed within the set time, a timeout occurs (t3 in the above figure) and the operation specified by Operation Selection on Communication Error (C076) takes place.
- If the Management Inverter is the master, the master switching command is sent after an elapse of the silent interval + Communication Wait Time (C078) following the sending of data by the Master Inverter (t1 in the above figure).
- If an Inverter other than the Management Inverter is the master, the master switching command is sent after an elapse of the silent interval + Communication Wait Time (C078) following the receiving of data from the Master Inverter (t2 in the above figure).
- If “01: Always started” is selected for Co-inverter Communication Start Selection, the Management Inverter starts sending the moment the power is turned on. Accordingly, any delay in the power-on timing of the other Inverter prevents normal communication and the Management Inverter experiences a communication timeout. If “Always started” is selected, confirm starting of all other Inverters and then start the Management Inverter at the end.
- Do not set 08FFh (EEPROM write) or 0901h (EEPROM write mode selection) in the recipient register.
- If any one of C096 to C100 is changed, the change will not be reflected until the power is reconnected or a reset is performed (by turning the RS terminal ON and then turning it OFF).

B-4 ModBus Data Listing

B-4-1 ModBus Coil List

The following tables list the primary coils for the inverter interface to the network. The table legend is given below.

- **Coil Number –** The network register address offset for the coil. The coil data is a single bit (binary) value.
- **Name –** The functional name of the coil
- **R/W –** The read-only (R) or read-write (R/W) access permitted to the inverter data
- **Description –** The meaning of each of the states of the coils

Coil No.	Item	R/W	Setting
0000h	unused	–	(Inaccessible)
0001h	Operation command	R/W	1: Run, 0: Stop (valid when A002 = 03)
0002h	Rotation direction command	R/W	1: Reverse rotation, 0: Forward rotation (valid when A002 = 03)
0003h	External trip (EXT)	R/W	1: Trip
0004h	Trip reset (RS)	R/W	1: Reset
0005h	(Reserved)	–	–
0006h	(Reserved)	–	–
0007h	Intelligent input terminal [1]	R/W	1: ON, 0: OFF (*1)
0008h	Intelligent input terminal [2]	R/W	1: ON, 0: OFF (*1)
0009h	Intelligent input terminal [3]	R/W	1: ON, 0: OFF (*1)
000Ah	Intelligent input terminal [4]	R/W	1: ON, 0: OFF (*1)
000Bh	Intelligent input terminal [5]	R/W	1: ON, 0: OFF (*1)
000Ch	Intelligent input terminal [6]	R/W	1: ON, 0: OFF (*1)
000Dh	Intelligent input terminal [7]	R/W	1: ON, 0: OFF (*1)
000Eh	(Reserved)	–	–
000Fh	Operation status	R	1: Run, 0: Stop (interlocked to “d003”)
0010h	Rotation direction	R	1: Reverse rotation, 0: Forward rotation (interlocked to “d003”)
0011h	Inverter ready	R	1: Ready, 0: Not ready
0012h	(Reserved)	–	–
0013h	RUN (running)	R	1: Running, 0: Not Running
0014h	FA1 (constant-speed reached)	R	1: ON, 0: OFF
0015h	FA2 (set frequency overreached)	R	1: ON, 0: OFF
0016h	OL (overload advance notice (1))	R	1: ON, 0: OFF
0017h	OD (output deviation for PID control)	R	1: ON, 0: OFF
0018h	AL (alarm signal)	R	1: ON, 0: OFF
0019h	FA3 (set frequency reached)	R	1: ON, 0: OFF
001Ah	OTQ (over-torque)	R	1: ON, 0: OFF
001Bh	(Reserved)	–	–
001Ch	UV (undervoltage)	R	1: ON, 0: OFF
001Dh	TRQ (torque limited)	R	1: ON, 0: OFF
001Eh	RNT (operation time over)	R	1: ON, 0: OFF
001Fh	ONT (plug-in time over)	R	1: ON, 0: OFF
0020h	THM (thermal alarm signal)	R	1: ON, 0: OFF
0021h	(Reserved)	–	–
0022h	(Reserved)	–	–
0023h	(Reserved)	–	–
0024h	(Reserved)	–	–
0025h	(Reserved)	–	–
0026h	BRK (brake release)	R	1: ON, 0: OFF
0027h	BER (brake error)	R	1: ON, 0: OFF
0028h	ZS (0 Hz detection signal)	R	1: ON, 0: OFF
0029h	DSE (speed deviation maximum)	R	1: ON, 0: OFF
002Ah	POK (positioning completed)	R	1: ON, 0: OFF
002Bh	FA4 (set frequency overreached 2)	R	1: ON, 0: OFF
002Ch	FA5 (set frequency reached 2)	R	1: ON, 0: OFF

Coil No.	Item	R/W	Setting
002Dh	OL2 (overload notice advance (2))	R	1: ON, 0: OFF
002Eh	Odc: Analog O disconnection detection	–	1: ON, 0: OFF
002Fh	OIDc: Analog OI disconnection detection	–	1: ON, 0: OFF
0030h	(Reserved)	–	–
0031h	(Reserved)	–	–
0032h	FBV (PID feedback comparison)	R	1: ON, 0: OFF
0033h	NDc (communication train disconnection)	R	1: ON, 0: OFF
0034h	LOG1 (logical operation result 1)	R	1: ON, 0: OFF
0035h	LOG2 (logical operation result 2)	R	1: ON, 0: OFF
0036h	LOG3 (logical operation result 3)	R	1: ON, 0: OFF
0037h	(Reserved)	–	–
0038h	(Reserved)	–	–
0039h	(Reserved)	–	–
003Ah	WAC (capacitor life warning)	R	1: ON, 0: OFF
003Bh	WAF (cooling-fan speed drop)	R	1: ON, 0: OFF
003Ch	FR (starting contact signal)	R	1: ON, 0: OFF
003Dh	OHF (heat sink overheat warning)	R	1: ON, 0: OFF
003Eh	LOC (low-current indication signal)	R	1: ON, 0: OFF
003Fh	M01 (general output 1)	R	1: ON, 0: OFF
0040h	M02 (general output 2)	R	1: ON, 0: OFF
0041h	M03 (general output 3)	R	1: ON, 0: OFF
0042h	(Reserved)	–	–
0043h	(Reserved)	–	–
0044h	(Reserved)	–	–
0045h	IRDY (inverter ready)	R	1: ON, 0: OFF
0046h	FWR (forward rotation)	R	1: ON, 0: OFF
0047h	RVR (reverse rotation)	R	1: ON, 0: OFF
0048h	MJA (major failure)	R	1: ON, 0: OFF
0049h	Data writing in progress	R	1: Writing in progress, 0: Normal status
004Ah	CRC error	R	1: Error detected, 0: No error (*2)
004Bh	Overrun	R	1: Error detected, 0: No error (*2)
004Ch	Framing error	R	1: Error detected, 0: No error (*2)
004Dh	Parity error	R	1: Error detected, 0: No error (*2)
004Eh	Sum check error	R	1: Error detected, 0: No error (*2)
004Fh	(Reserved)	–	–
0050h	WCO (window comparator O)	R	1: ON, 0: OFF
0051h	WCOI (window comparator OI)	R	1: ON, 0: OFF
0052h	(Reserved)	–	–
0053h	OPDc (option disconnection)	R	1: ON, 0: OFF
0054h	FREF (FQ command source)	R	1: Operator, 0: Others
0055h	REF (RUN command source)	R	1: Operator, 0: Others
0056h	SETM (2nd motor selected)	R	1: 2nd motor selected, 0: 1st motor selected
0057h	(Reserved)	–	–
0058h	EDM (Gate suppress monitor)	R	1: ON, 0: OFF
0059h-	unused	R	inaccessible

Note 1 Normally, this coil is turned on when the corresponding intelligent input terminal on the control circuit terminal block is turned on or the coil itself is set to on. In this regard, the operation of the intelligent input terminal has priority over the operation of the coil. If disconnection of the communication train has disabled the master system from turning off the coil, turn the corresponding intelligent input terminal on the control circuit block on and off. This operation turns off the coil.

Note 2 Communication error data is retained until an error reset command is input. (The data can be reset during the inverter operation.)

B-4-2 ModBus Holding Registers

The following tables list the holding registers for the inverter interface to the network. The table legend is given below.

- **Function Code –** The inverter's reference code for the parameter or function (same as inverter keypad display)
- **Name –** The standard functional name of the parameter or function for the inverter
- **R/W –** The read-only(R) or read-write access(R/W) permitted to the data in the inverter
- **Description –** How the parameter or setting works (same as Chapter 3 description).
- **Reg. –** The network register address offset for the value. Some values have a high-byte and low-byte address.
- **Range –** The numerical range for the network value that is sent and/or received

⚠ Tip The network values are binary integers. Since these values cannot have an embedded decimal point, for many parameters it represents the actual value (in engineering units) multiplied by a factor of 10 or 100. Network communications must use the listed range for network data. The inverter automatically divides received values by the appropriate factor in order to establish the decimal point for internal use. Likewise, the network host computer must apply the same factor when it needs to work in engineering units. However, when sending data to the inverter, the network host computer must scale values to the integer range listed for network communications.

- **Resolution –** This is the quantity represented by the LSB of the network value, in engineering units. When the network data range is greater than the inverter's internal data range, this 1-bit resolution will be fractional.

Register No.	Function name	Function code	R/W	Monitoring and setting items		Data resolution
0000h	unused	–	–	Inaccessible		
0001h	Output frequency setting/monitor	F001 (high)	R/W	0 to 40000 (valid when A001 = 03)		0.01 [Hz]
0002h		F001 (low)	R/W			
0003h	Inverter status A	–	R	0: Initial status 2: Stopping 3: Running 4: Free-run stop 5: Jogging	6: DC braking 7: Retrying 8: Tripping 9: Undervoltage (UV),	–
0004h	Inverter status B	–	R	0: Stopping, 1: Running, 2: Tripping		–
0005h	Inverter status C	–	R	0: – 1: Stopping 2: Decelerating 3: Constant-speed operation 4: Accelerating 5: Forward rotation	6: Reverse rotation 7: Switching from fwd. to rev. rotation, 8: Switching from rev. to fwd. rotation, 9: Starting fwd. 10: Starting rev.	–
0006h	PID feedback	–	R/W	0 to 10000		0.01 [%]
0007h to 0010h	(Reserved)	–	R	–	–	

Register No.	Function name	Function code	R/W	Monitoring and setting items	Data resolution
0011h	Fault frequency monitor	d080	R	0 to 65535	1 [time]
0012h	Fault monitor 1 (factor)	d081	R	See the list of inverter trip factors below	–
0013h	Fault monitor 1 (inverter status)			See the list of inverter trip factors below	–
0014h	Fault monitor 1 (frequency) (high)			0 to 40000	0.01[Hz]
0015h	Fault monitor 1 (frequency (low)				
0016h	Fault monitor 1 (current)			Output current at tripping	0.01[A]
0017h	Fault monitor 1 (voltage)			DC input voltage at tripping	1[V]
0018h	Fault monitor 1 (running time) (high)			Cumulative running time at tripping	1[h]
0019h	Fault monitor 1 (running time) (low)				
001Ah	Fault monitor 1 (power-on time) (high)			Cumulative power-on time at tripping	1[h]
001Bh	Fault monitor 1 (power-on time) (low)				
001Ch	Fault monitor 2 (factor)	d082	R	See the list of inverter trip factors below	–
001Dh	Fault monitor 2 (inverter status)			See the list of inverter trip factors below	–
001Eh	Fault monitor 2 (frequency) (high)			0 to 40000	0.01[Hz]
001Fh	Fault monitor 2 (frequency (low)				
0020h	Fault monitor 2 (current)			Output current at tripping	0.01[A]
0021h	Fault monitor 2 (voltage)			DC input voltage at tripping	1[V]
0022h	Fault monitor 2 (running time) (high)			Cumulative running time at tripping	1[h]
0023h	Fault monitor 2 (running time) (low)				
0024h	Fault monitor 2 (power-on time) (high)			Cumulative power-on time at tripping	1[h]
0025h	Fault monitor 2 (power-on time) (low)				
0026h	Fault monitor 3 (factor)	d083	R	See the list of inverter trip factors below	–
0027h	Fault monitor 3 (inverter status)			See the list of inverter trip factors below	–
0028h	Fault monitor 3 (frequency) (high)			0 to 40000	0.01[Hz]
0029h	Fault monitor 3 (frequency (low)				
002Ah	Fault monitor 3 (current)			Output current at tripping	0.01[A]
002Bh	Fault monitor 3 (voltage)			DC input voltage at tripping	1[V]
002Ch	Fault monitor 3 (running time) (high)			Cumulative running time at tripping	1[h]
002Dh	Fault monitor 3 (running time) (low)				
002Eh	Fault monitor 3 (power-on time) (high)			Cumulative power-on time at tripping	1[h]
002Fh	Fault monitor 3 (power-on time) (low)				
0030h	Fault monitor 4 (factor)	d084	R	See the list of inverter trip factors below	–
0031h	Fault monitor 4 (inverter status)			See the list of inverter trip factors below	–
0032h	Fault monitor 4 (frequency) (high)			0 to 40000	0.01[Hz]
0033h	Fault monitor 4 (frequency (low)				
0034h	Fault monitor 4 (current)			Output current at tripping	0.01[A]
0035h	Fault monitor 4 (voltage)			DC input voltage at tripping	1[V]
0036h	Fault monitor 4 (running time) (high)			Cumulative running time at tripping	1[h]
0037h	Fault monitor 4 (running time) (low)				
0038h	Fault monitor 4 (power-on time) (high)			Cumulative power-on time at tripping	1[h]
0039h	Fault monitor 4 (power-on time) (low)				
003Ah	Fault monitor 5 (factor)	d085	R	See the list of inverter trip factors below	–
003Bh	Fault monitor 5 (inverter status)			See the list of inverter trip factors below	–
003Ch	Fault monitor 5 (frequency) (high)			0 to 40000	0.01[Hz]
003Dh	Fault monitor 5 (frequency (low)				
003Eh	Fault monitor 5 (current)			Output current at tripping	0.01[A]
003Fh	Fault monitor 5 (voltage)			DC input voltage at tripping	1[V]
0040h	Fault monitor 5 (running time) (high)			Cumulative running time at tripping	1[h]
0041h	Fault monitor 5 (running time) (low)				
0042h	Fault monitor 5 (power-on time) (high)			Cumulative power-on time at tripping	1[h]
0043h	Fault monitor 5 (power-on time) (low)				

Register No.	Function name	Function code	R/W	Monitoring and setting items	Data resolution
0044h	Fault monitor 6 (factor)	d086	R	See the list of inverter trip factors below	–
0045h	Fault monitor 6 (inverter status)			See the list of inverter trip factors below	–
0046h	Fault monitor 6 (frequency) (high)			0 to 40000	0.01[Hz]
0047h	Fault monitor 6 (frequency (low)				
0048h	Fault monitor 6 (current)			Output current at tripping	0.01[A]
0049h	Fault monitor 6 (voltage)			DC input voltage at tripping	1[V]
004Ah	Fault monitor 6 (running time) (high)			Cumulative running time at tripping	1[h]
004Bh	Fault monitor 6 (running time) (low)				
004Ch	Fault monitor 6 (power-on time) (high)			Cumulative power-on time at tripping	1[h]
004Eh	Warning monitor	d090	R	Warning code: 0 to 385	–
004Fh to 006Ch	(reserved)	–	–	–	–
006Dh to 08Efh	(reserved)	–	–	–	–
0900h	Writing to EEPROM	–	W	0: Motor constant recalculation 1: Save all data in EEPROM Other: Motor constant recalculation and save all data in EEPROM	–
0901h	Unused	–	–	Inaccessible	–
0902h	EEPROM write mode	–	W	0 (invalid) / 1 (valid)	
0903h to 1000h	Unused	–	–	Inaccessible	–

Note 1 Assume that the rated current of the inverter is “1000”.

Note 2 If a number not less than “1000” (100.0 seconds) is specified, the second value after the decimal point will be ignored.

Note 3 0902h setting is referred for one time when following 06h command is executed

List of inverter trip factors

Upper part of trip factor code (indicating the factor)		**Lower part of trip factor code (indicating the inverter status)**	
Name	Code	Name	Code
No trip factor	0	Resetting	0
Over-current event while at constant speed	1	Stopping	1
Over-current event during deceleration	2	Decelerating	2
Over-current event during acceleration	3	Constant-speed operation	3
Over-current event during other conditions	4	Accelerating	4
Overload protection	5	Operating at zero frequency	5
Braking resistor overload protection	6	Starting	6
Overvoltage protection	7	DC braking	7
EEPROM error	8	Overload restricted	8
Undervoltage protection	9		
Current detection error	10		
CPU error	11		
External trip	12		
USP error	13		
Ground-fault protection	14		
Input overvoltage protection	15		
Inverter thermal trip	21		
CPU error	22		
Main circuit error	25		
Driver error	30		
Thermistor error	35		
Braking error	36		
Safe Stop	37		
Low-speed overload protection	38		
Operator connection	40		
Modbus communication error	41		
Easy sequence error (invalid instruction)	43		
Easy sequence error (invalid nesting count)	44		
Easy sequence execution error 1	45		
Easy sequence user trip 0 to 9	50 to 59		
Option error 0 to 9	60 to 69		
Encoder disconnection	80		
Excessive speed	81		
Position control range trip	83		

(iii) List of registers (monitoring)

Register No.	Function name	Function code	R/W	Monitoring and setting items	Data resolution
1001h	Output frequency monitor	d001 (high)	R	0 to 40000	0.01 [Hz]
1002h		d001 (low)			
1003h	Output current monitor	d002	R	0 to 999900	0.01 [A]
1004h	Rotation direction monitor	d003	R	0: Stopping, 1: Forward rotation, 2: Reverse rotation	0.1 [Hz]
1005h	PID feedback value monitor	d004 (high)	R	0 to 1000000	0.1
1006h		d004 (low)			
1007h	Multi-function input monitor	d005	R	2^0: Terminal 1 to 2^6: Terminal 7	1 bit
1008h	Multi-function output monitor	d006	R	2^0: Terminal 11 to 2^1: Terminal 12/ 2^2: Relay Terminal	1 bit
1009h	Output frequency monitor (after conversion)	d007 (high)	R	0 to 4000000	0.01
100Ah		d007 (low)			
100Bh	Real frequency monitor	d008 (high)	R	-40000 to +40000	0.01 [Hz]
100Ch		d008 (low)	R		
100Dh	Torque reference monitor	d009	R	-200 to +200	1 [%]
100Eh	Torque bias monitor	d010	R	-200 to +200	1 [%]
100Fh	(Reserved)	–	–	–	–
1010h	Output torque monitor	d012	R	-200 to +200	1 [%]
1011h	Output voltage monitor	d013	R	0 to 6000	0.1 [V]
1012h	Input power monitor	d014	R	0 to 1000	0.1 [kW]
1013h	Watt-hour monitor	d015 (high)	R	0 to 9999000	0.1
1014h		d015 (low)			
1015h	Total RUN time	d016 (high)	R	0 to 999900	1 [h]
1016h		d016 (low)			
1017h	Power ON time monitor	d017 (high)	R	0 to 999900	1 [h]
1018h		d017 (low)			
1019h	Fin temperature monitor	d018	R	-200 to 1500	0.1 [ºC]
101Ah to 101Ch	(Reserved)	–	–	–	–
101Dh	Life assessment monitor	d022	R	2^0: Capacitor on main circuit board 2^1: cooling-fan	1 bit
101Eh	Program counter	d023	R	0~1024	
101Fh	Program number	d024	R	0~9999	
1020h~1025h	(Reserved)	–	–	–	–
1026h	DC voltage monitor	d102	R	0 to 10000	0.1 [V]
1027h	Regenerative braking load rate monitor	d103	R	0 to 1000	0.1 [%]
1028h	Electronic thermal monitor	d104	R	0 to 1000	0.1 [%]
1029h to 102Dh	(Reserved)	–	–	–	–
102Eh	Drive programming monitor (UM0)	d025(HIGH)	R	-2147483647 to 2147483647	1
102Fh		d025(LOW)	R		
1030h	Drive programming monitor (UM1)	d026(HIGH)	R	-2147483647 to 2147483647	1
1031h		d026(LOW)	R		
1032h	Drive programming monitor (UM2)	d027(HIGH)	R	-2147483647 to 2147483647	1
1033h		d027(LOW)	R		
1034h to 1035h	(Reserved)	–	–	–	–
1036h	Position command monitor	d029(HIGH)	R	-268435455 to 268435455	1
1037h		d029(LOW)	R		
1038h	Current position monitor	d030(HIGH)	R	-268435455 to 268435455	1
1039h		d030(LOW)	R		
103Ah to 1056h	(reserved)	–	–	–	–
1057h	Inverter mode	d060	R	0 (IM CT) 1 (IM VT) 2 (Reserved)	
1058h	unused	–	–	Inaccessible	–

Register No.	Function name	Function code	R/W	Monitoring and setting items	Data resolution
1059h	Frequency source monitor	d062	R	0: Operator 1 to 15: Multi-speed freq. 1 to 15 16: Jog frequency 18: Modbus network 19: Option 21: Potentiometer 22: Pulse train 23: Calculated function output 24: EzSQ (Drive Programming) 25: [O] input 26: [OI] input 27: [O] + [OI]	–
105Ah	Run source monitor	d063	R	1: Terminal 2: Operator 3: Modbus network 4: Option	–
10A1h	Analog input O monitor	d130	R	0 to 1023	–
10A2h	Analog input OI monitor	d131	R	0 to 1023	–
10A4h	Pulse train input monitor	d133	R	0.00 to 100.00	%
10A6h	PID deviation monitor	d153	R	-327.68 to 327.67 -9999.00 to 9999.00	%
10A8h	PID output monitor	d155	R	0.00 to 9999.00 if (A071: 01) -9999.00 to 9999.00 if (A071: 02)	%

(iv) List of registers

Register No.	Function name	Function code	R/W	Monitoring and setting items	Data resolution
1103h	Acceleration time 1	F002 (high)	R/W	0 to 360000	0.01 [sec.]
1104h		F002 (low)			
1105h	Deceleration time 1	F003 (high)	R/W	0 to 360000	0.01 [sec.]
1106h		F003 (low)			
1107h	Operator rotation direction selection	F004	R/W	00 (forward rotation), 01 (reverse rotation)	–
1108h to 1200h	Unused	–	–	Inaccessible	–

(v) List of registers (function modes)

Parameter group A

Register No.	Function name	Function code	R/W	Monitoring and setting items	Data resolution
1201h	Frequency reference selection	A001	R/W	00 (digital operator), 01 (terminal), 02 (operator), 03 (Modbus communication), 04 (option), 06 (pulse train frequency), 7 (drive programming), 10 (operation function result)	–
1202h	Run command selection (*)	A002	R/W	01 (terminal), 02 (operator), 03 (Modbus communication), 04 (option)	–
1203h	Base frequency	A003	R/W	300 to “maximum frequency”	0.1 [Hz]
1204h	Maximum frequency	A004	R/W	300 to 4000	0.1 [Hz]
1205h	O/OI selection	A005	R/W	00 (switches between O/OI via terminal AT), 02 (switches between O/FREQ adjuster via terminal AT), 03 (switches between OI/FREQ adjuster via terminal AT)	–
1206h to 120Ah	(Reserved)	–	–	–	–
120Bh	O start frequency	A011 (high)	R/W	0 to 40000	0.01 [Hz]
120Ch		A011 (low)			
120Dh	O end frequency	A012 (high)	R/W	0 to 40000	0.01 [Hz]
120Eh		A012 (low)			
120Fh	O start ratio	A013	R/W	0 to “O end ratio”	1 [%]
1210h	O end ratio	A014	R/W	“O start ratio” to 100	1 [%]
1211h	O start selection	A015	R/W	00 (start FQ), 01 (0 Hz)	–
1212h	O, O2, OI sampling	A016	R/W	1 to 30 or 31 (500 ms filter ±0.1 Hz with hysteresis)	1
1213h	Drive Programming (EzSQ) selection	A017	R/W	00 (disable), 01 (PRG start), 02 (always ON)	–
1214h	(Reserved)	–	–	–	–
1215h	Multi-step speed selection	A019	R/W	00 (binary), 01 (bit)	–
1216h	Multi-step speed reference 0	A020 (high)	R/W	0 or “start frequency” to “maximum frequency”	0.01 [Hz]
1217h		A020 (low)	R/W		
1218h	Multi-step speed reference 1	A021 (high)	R/W	0 or “start frequency” to “maximum frequency”	0.01 [Hz]
1219h		A021 (low)	R/W		
121Ah	Multi-step speed reference 2	A022 (high)	R/W	0 or “start frequency” to “maximum frequency”	0.01 [Hz]
121Bh		A022 (low)	R/W		
121Ch	Multi-step speed reference 3	A023 (high)	R/W	0 or “start frequency” to “maximum frequency”	0.01 [Hz]
121Dh		A023 (low)	R/W		
121Eh	Multi-step speed reference 4	A024 (high)	R/W	0 or “start frequency” to “maximum frequency”	0.01 [Hz]
121Fh		A024 (low)	R/W		
1220h	Multi-step speed reference 5	A025 (high)	R/W	0 or “start frequency” to “maximum frequency”	0.01 [Hz]
1221h		A025 (low)	R/W		
1222h	Multi-step speed reference 6	A026 (high)	R/W	0 or “start frequency” to “maximum frequency”	0.01 [Hz]
1223h		A026 (low)	R/W		
1224h	Multi-step speed reference 7	A027 (high)	R/W	0 or “start frequency” to “maximum frequency”	0.01 [Hz]

After changing the setting, keep the time 40 ms or longer before actually give run command

Register No.	Function name	Function code	R/W	Monitoring and setting items	Data resolution
1226h	Multi-step speed reference 8	A028 (high)	R/W	0 or “start frequency” to “maximum frequency”	0.01 [Hz]
1227h		A028 (low)	R/W		
1228h	Multi-step speed reference 9	A029 (high)	R/W	0 or “start frequency” to “maximum frequency”	0.01 [Hz]
1229h		A029 (low)	R/W		
122Ah	Multi-step speed reference 10	A030 (high)	R/W	0 or “start frequency” to “maximum frequency”	0.01 [Hz]
122Bh		A030 (low)	R/W		
122Ch	Multi-step speed reference 11	A031 (high)	R/W	0 or “start frequency” to “maximum frequency”	0.01 [Hz]
122Dh		A031 (low)	R/W		
122Eh	Multi-step speed reference 12	A032 (high)	R/W	0 or “start frequency” to “maximum frequency”	0.01 [Hz]
122Fh		A032 (low)	R/W		
1230h	Multi-step speed reference 13	A033 (high)	R/W	0 or “start frequency” to “maximum frequency”	0.01 [Hz]
1231h		A033 (low)	R/W		
1232h	Multi-step speed reference 14	A034 (high)	R/W	0 or “start frequency” to “maximum frequency”	0.01 [Hz]
1233h		A034 (low)	R/W		
1234h	Multi-step speed reference 15	A035 (high)	R/W	0 or “start frequency” to “maximum frequency”	0.01 [Hz]
1235h		A035 (low)	R/W		
1236h	(Reserved)	–	–	–	–
1237h	(Reserved)	–	–	–	–
1238h	Jogging frequency	A038	R/W	0.0, “Start frequency” to 999	0.01 [Hz]
1239h	Jogging stop selection	A039	R/W	00 (free running on jogging stop/Disabled in operation) 01 (deceleration stop on jogging stop/ Disabled in operation) 02 (DC injection braking on jogging stop/Disabled in operation) 03 (free running on jogging stop/ Enabled in operation) 04 (deceleration stop on jogging stop/ Enabled in operation) 05 (DC injection braking on jogging stop/Enabled in operation)	
123Ah	(Reserved)	–	–	–	–
123Bh	Torque boost selection	A041	R/W	00 (manual torque boost), 01 (automatic torque boost)	–
123Ch	Manual torque boost voltage	A042	R/W	0 to 200	0.1 [%]
123Dh	Manual torque boost frequency	A043	R/W	0 to 500	0.1 [%]
123Eh	V/F characteristics selection	A044	R/W	00 (VC), 01 (VP), 02 (free V/f), 03 (sensorless vector control),	–
123Fh	Output voltage gain	A045	R/W	20 to 100	1 [%]
1240h	Automatic torque boost voltage compensation gain	A046	R/W	0 to 255	1 [%]
1241h	Automatic torque boost slip compensation gain	A047	R/W	0 to 255	1 [%]
1242h to1244h	(Reserved)	–	–	–	–
1245h	DC injection braking enable	A051	R/W	00 (disabling), 01 (enabling), 02 (output freq [A052 set value])	–
1246h	DC injection braking frequency	A052	R/W	0 to 6000	0.01 [Hz]
1247h	DC injection braking delay time	A053	R/W	0 to 50	0.1 [sec.]
1248h	DC injection braking power	A054	R/W	0 to 100	1 [%]
1249h	DC injection braking time	A055	R/W	0 to 600	0.1 [sec.]
124Ah	DC injection braking method selection	A056	R/W	00 (edge operation), 01 (level operation)	–
124Bh	Startup DC injection braking power	A057	R/W	0 to 100	1 [%]
124Ch	Startup DC injection braking time	A058	R/W	0 to 600	0.1 [sec.]
124Dh	DC injection braking carrier frequency	A059	R/W	20 to 150	0.1 [kHz]
124Eh	(Reserved)	–	–	–	–
124Fh	Frequency upper limit	A061 (high)	R/W	0 or “maximum frequency limit” to “maximum frequency”	0.01 [Hz]
1250h		A061 (low)	R/W		

Register No.	Function name	Function code	R/W	Monitoring and setting items	Data resolution
1251h	Frequency lower limit	A062 (high)	R/W	0 or “maximum frequency limit” to “maximum frequency”	0.01 [Hz]
1252h		A062 (low)	R/W		
1253h	Jump frequency 1	A063 (high)	R/W	0 to 40000	0.01 [Hz]
1254h		A063 (low)	R/W		
1255h	Jump frequency width 1	A064	R/W	0 to 1000	0.01 [Hz]
1256h	Jump frequency 2	A065 (high)	R/W	0 to 40000	0.01 [Hz]
1257h		A065 (low)	R/W		
1258h	Jump frequency width 2	A066	R/W	0 to 1000	0.01 [Hz]
1259h	Jump frequency 3	A067 (high)	R/W	0 to 40000	0.01 [Hz]
125Ah		A067 (low)	R/W		
125Bh	Jump frequency width 3	A068	R/W	0 to 1000	0.01 [Hz]
125Ch	Acceleration stop frequency	A069 (high)	R/W	0 to 40000	0.01 [Hz]
125Dh		A069 (low)	R/W		
125Eh	Acceleration stop time	A070	R/W	0 to 600	0.1 [sec.]
125Fh	PID selection	A071	R/W	00 (disabling), 01 (enabling), 02 (reverse output enabling)	–
1260h	PID P gain	A072	R/W	0 to 2500	0.10
1261h	PID I gain	A073	R/W	0 to 36000	0.1 [sec.]
1262h	PID D gain	A074	R/W	0 to 10000	0.01 [sec.]
1263h	PID scale	A075	R/W	1 to 9999	0.01
1264h	PID feedback selection	A076	R/W	00 (OI), 01 (O), 02 (RS485 communication), 03 (pulse train frequency), 10 (operation function output)	–
1265h	Reverse PID function	A077	R/W	00 (disabling), 01 (enabling)	–
1266h	PID output limit function	A078	R/W	0 to 1000	0.1 [%]
1267h	PID feedforward selection	A079	R/W	00 (disabled), 01 (O), 02 (OI)	–
1268h	(Reserved)	–	R/W	–	–
1269h	AVR selection	A081	R/W	00 (always on), 01 (always off), 02 (off during deceleration)	–
126Ah	AVR voltage selection	A082	R/W	200 V class: 0 (200)/1 (215)/2 (220)/3 (230)/4 (240) 400 V class: 5 (380)/6 (400)/7 (415)/8 (440)/9 (460)/10 (480)	–
126Bh	AVR filter time constant	A083	R/W	0.000 to 10.00	0.001[sec]
126Ch	AVR deceleration gain	A084	R/W	50 to 200	1[%]
126Dh	Energy-saving operation mode	A085	R/W	00 (normal operation), 01 (energy-saving operation)	–
126Eh	Energy-saving response/ accuracy adjustment	A086	R/W	0 to 1000	0.1 [%]
126Fh to 1273h	(Reserved)	–	–	–	
1274h	Acceleration time 2	A092 (high)	R/W	0 to 360000	0.01 [sec.]
1275h		A092 (low)	R/W		
1276h	Deceleration time 2	A093 (high)	R/W	0 to 360000	0.01 [sec.]
1277h		A093 (low)	R/W		
1278h	Select method to switch to Acc2/ Dec2 profile	A094	R/W	00 (switching by 2CH terminal), 01 (switching by setting) 02 (Forward and reverse)	–
1279h	Acc1 to Acc2 frequency transition point	A095 (high)	R/W	0 to 40000	0.01 [Hz]
127Ah		A095 (low)	R/W		
127Bh	Dec1 to Dec2 frequency transition point	A096 (high)	R/W	0 to 40000	0.01 [Hz]
127Ch		A096 (low)	R/W		
127Dh	Acceleration curve selection	A097	R/W	00 (linear), 01 (S curve), 02 (U curve), 03 (inv.U curve), 04 (EL-S curve)	–
127Eh	Deceleration curve setting	A098	R/W	00 (linear), 01 (S curve), 02 (U curve), 03 (inv.U curve), 04 (EL-S curve)	–
127Fh	(Reserved)	–	–	–	–
1280h	(Reserved)	–	–	–	0.01 [Hz]
1281h	OI input active range start frequency	A101 (high)	R/W	0 to 40000	0.01 [Hz]
1282h		A101 (low)	R/W		

Register No.	Function name	Function code	R/W	Monitoring and setting items	Data resolution
1283h	OI input active range end frequency	A102 (high)	R/W	0 to 40000	1 [%]
1284h		A102 (low)	R/W		
1285h	OI input active range start ratio	A103	R/W	0 to “OI input active range end ratio”	1 [%]
1286h	OI input active range end ratio	A104	R/W	“OI input active range start ratio” to 100	–
1287h	OI input start frequency enable	A105	R/W	00 (start FQ), 01 (0 Hz)	–
1288h to 12A4h	(Reserved)	–	–	–	–
12A5h	Acceleration curve parameter	A131	R/W	01 (small curve) to 10 (large curve)	–
12A6h	Deceleration curve parameter	A132	R/W	01 (small curve) to 10 (large curve)	-
12A7h to 12AEh	(Reserved)	–	–	–	–
12AFh	Operation frequency input A setting	A141	R/W	00 (digital operator), 01 (freq adjuster), 02 (input O), 03 (input OI), 04 (RS485 communication), 05 (option 1), 06 (Option 2), 07 (pulse train frequency)	–
12B0h	Operation frequency input B setting	A142	R/W	00 (digital operator), 01 (freq adjuster), 02 (input O), 03 (input OI), 04 (RS485 communication), 05 (option 1), 06 (Option 2), 07 (pulse train frequency)	–
12B1h	Operator selection	A143	R/W	00 (addition (A + B)), 01 (subtraction: (A - B)), 02 (multiplication: (A x B))	–
12B2h	(Reserved)	–	–	–	–
12B3h	Frequency addition amount	A145 (high)	R/W	0 to 40000	0.01 [Hz]
12B4h		A145 (low)	R/W		
12B5h	Frequency addition direction	A146	R/W	00 (frequency command + A145), 01 (frequency command - A145)	–
12B6h to 12B8h	(Reserved)	–	–	–	–
12B9h	EL-S-curve ratio 1 during acceleration	A150	R/W	0 to 50	1 [%]
12BAh	EL-S-curve ratio 2 during acceleration	A151	R/W	0 to 50	1 [%]
12BBh	EL-S-curve ratio 1 during deceleration	A152	R/W	0 to 50	1 [%]
12BCh	EL-S-curve ratio 2 during deceleration	A153	R/W	0 to 50	1 [%]
12BDh	Deceleration hold frequency	A154 (high)	R/W	0~40000	0.01 [Hz]
12BEh		A154 (low)			
12BFh	Deceleration hold time	A155	R/W	0~600	0.1 [sec.]
12C0h	PID sleep function action threshold	A156 (high)	R/W	0~40000	0.01 [Hz]
12C1h		A156 (low)			
12C2h	PID sleep function action delay time	A157	R/W	0~255	0.1 [sec.]
12C3h to 12C5h	(Reserved)	–	–	–	–
12C6h	[VR] input active range start frequency	A161 (high)	R/W	0~40000	0.01 [Hz]
12C7h		A161 (low)			
12C8h	[VR] input active range end frequency	A162 (high)	R/W	0~40000	0.01 [Hz]
12C9h		A162 (low)			
12CAh	[VR] input active range start current	A163	R/W	0~100	1 [%]
12CBh	[VR] input active range end voltage	A164	R/W	0~100	1 [%]
12CCh	[VR] input start frequency enable	A165	R/W	00 (start FQ) / 01 (0 Hz)	–
12CDh to 1300h	unused	–	–	Inaccessible	–

Parameter group B

Register No.	Function name	Function code	R/W	Monitoring and setting items	Data resolution
1301h	Retry selection	b001	R/W	00 (trip), 01 (0 Hz start), 02 (frequency matching start), 03 (trip after frequency matching deceleration stop), 04 (active frequency matching restart)	–
1302h	Allowable momentary power interruption time	b002	R/W	3 to 250	0.1 [sec.]
1303h	Retry wait time	b003	R/W	3 to 1000	0.1 [sec.]
1304h	Momentary power interruption/ undervoltage trip during stop selection	b004	R/W	00 (disabling), 01 (enabling), 02 (disabling during stopping and decelerating to stop)	–
1305h	Momentary power interruption retry time selection	b005	R/W	00 (16 times), 01 (no limit)	–
1306h	(Reserved)	–	–	–	–
1307h	Frequency matching lower limit frequency setting	b007 (high)	R/W	0 to 40000	0.01 [Hz]
1308h		b007 (low)	R/W		
1309h	Trip retry selection	b008	R/W	00 (trip), 01 (0 Hz start), 02 (frequency matching start), 03 (trip after frequency matching deceleration stop), 04 (active frequency matching restart)	–
130Ah	(Reserved)	–	–	–	–
130Bh	Overvoltage/overcurrent retry time selection	b010	R/W	1 to 3	1 [time]
130Ch	Trip retry wait time	b011	R/W	3 to 1000	0.1 [sec.]
130Dh	Electronic thermal level	b012	R/W	0.20 x Rated current to 1.00 x Rated current	0.1 [%]
130Eh	Electronic thermal characteristics selection	b013	R/W	00 (reduced torque characteristic), 01 (constant torque characteristic), 02 (free setting)	–
130Fh	(Reserved)	–	–	Inaccessible	–
1310h	Free setting, electronic thermal frequency 1	b015	R/W	0 to b017	1 [Hz]
1311h	Free setting, electronic thermal current 1	b016	R/W	0 to Rated current	0.1 [A]
1312h	Free setting, electronic thermal frequency 2	b017	R/W	0 to b019	1 [Hz]
1313h	Free setting, electronic thermal current 2	b018	R/W	0 to Rated current	0.1 [A]
1314h	Free setting, electronic thermal frequency 3	b019	R/W	0 to 400	1 [Hz]
1315h	Free setting, electronic thermal current 3	b020	R/W	0 to Rated current	0.1 [A]
1316h	Overload limit selection	b021	R/W	00 (disabling), 01 (enabling during acceleration and constant-speed operation), 02 (enabling during constant-speed operation), 03 (enabling during acceleration and constant-speed operation [speed increase at regeneration])	–
1317h	Overload limit level	b022	R/W	0.32 x Rated current to 3.20 x Rated current	0.1 [%]
1318h	Overload limit parameter	b023	R/W	1 to 30000	0.1 [sec.]
1319h	Overload limit selection 2	b024	R/W	00 (disabling), 01 (enabling during acceleration and constant-speed operation), 02 (enabling during constant-speed operation), 03 (enabling during acceleration and constant-speed operation [speed increase at regeneration])	–
131Ah	Overload limit level 2	b025	R/W	0.32 x Rated current to 3.20 x Rated current	0.1 [%]
131Bh	Overload limit parameter 2	b026	R/W	1 to 30000	0.1 [sec.]
131Ch	Overcurrent suppression function	b027	R/W	00 (disabling), 01 (enabling), 02 (enable with reduced voltage)	–
131Dh	Active frequency matching restart level	b028	R/W	0.32 x Rated current to 3.20 x Rated current	0.1 [%]
131Eh	Active frequency matching restart parameter	b029	R/W	1 to 30000	0.1 [sec.]

Register No.	Function name	Function code	R/W	Monitoring and setting items	Data resolution
131Fh	Starting frequency at active frequency matching restart	b030	R/W	00 (frequency at the last shutoff), 01 (maximum frequency),02 (set frequency)	–
1320h	Soft lock selection	b031	R/W	00 (disabling change of data other than “b031” when SFT is on), 01 (disabling change of data other than “b031” and frequency settings when SFT is on), 02 (disabling change of data other than “b031”), 03 (disabling change of data other than “b031” and frequency settings), 10 (enabling data changes during operation)	–
1321h	(Reserved)	–	–	–	–
1322h	Motor cable length parameter	b033	R/W	5 to 20	–
1323h	RUN time/Power ON time setting	b034 (high)	R/W	0 to 65535	1 [10h]
1324h		b034 (low)	R/W		
1325h	Rotation direction limit selection	b035	R/W	00 (Forward and Reverse are enabled)/ 01 (Enable for forward only)/ 02 (Enable for reverse only)	–
1326h	Reduced voltage startup selection	b036	R/W	0 (minimum reduced voltage start time) to 255 (maximum reduced voltage start time)	–
1327h	Display selection	b037	R/W	00 (complete display), 01 (function-specific display), 02 (user setting), 03 (data comparison display), 04 (basicdisplay), 05 (monitor display)	–
1328h	Initial screen selection	b038	R/W	000-202	–
1329h	User parameter automatic setting function selection	b039	R/W	00 (disabling), 01 (enabling)	–
132Ah	Torque limit selection	b040	R/W	00 (quadrant-specific setting), 01 (switching by terminal), 02 (analog input), 03 (option 1)	–
132Bh	Torque limit 1 (fwd-power in 4-quadrant mode)	b041	R/W	0 to 200/no	1 [%]
132Ch	Torque limit 2 (rev/regen. in 4-quadrant mode)	b042	R/W	0 to 200/no	1 [%]
132Dh	Torque limit 3 (rev/power in 4-quadrant mode)	b043	R/W	0 to 200/no	1 [%]
132Eh	Torque limit 4 (fwd/regen. in 4-quadrant mode)	b044	R/W	0 to 200/no	1 [%]
132Fh	Torque LADSTOP selection	b045	R/W	00 (disabling), 01 (enabling)	–
1330h	Reverse rotation prevention selection	b046	R/W	00 (disabling), 01 (enabling)	–
1331h to 1332h	(Reserved)	–	–	–	–
1333h	Dual rate selection	b049	R/W	00 (CT mode)/ 01 (VT mode)	–
1334h	Selection of non-stop function at momentary power interruption	b050	R/W	00 (disabling), 01 (enabling), 02 (enabled (deceleration stop)) 03 (RUN)	–
1335h	Starting voltage of non-stop function at momentary power interruption	b051	R/W	0 to 10000	0.1 [V]
1336h	Stop deceleration level of non-stop function at momentary power interruption	b052	R/W	0 to 10000	0.1 [V]
1337h	Deceleration time of non-stop function at momentary power interruption	b053 (high)	R/W	0.01 to 36000	0.01 [sec.]
1338h		b053 (low)	R/W		
1339h	Deceleration starting width of non-stop function at momentary power interruption	b054	R/W	0 to 1000	0.01 [Hz]
133Ah to 133Eh	(Reserved)	–	–	–	–
133Fh	Window comparator O upper limit level	b060	R/W	0. to 100. (lower limit : b061 + b062 *2) (%)	1 [%]
1340h	Window comparator O lower limit level	b061	R/W	0. to 100. (lower limit : b060 - b062*2) (%)	1 [%]
1341h	Window comparator O hysteresis width	b062	R/W	0. to 10. (lower limit : b061 - b062 / 2) (%)	1 [%]

Register No.	Function name	Function code	R/W	Monitoring and setting items	Data resolution
1342h	Window comparator OI upper limit level	b063	R/W	0. to 100. (lower limit : b064 + b066 *2) (%)	1 [%]
1343h	Window comparator OI lower limit level	b064	R/W	0. to 100. (lower limit : b063 - b066 *2) (%)	1 [%]
1344h	Window comparator OI hysteresis width	b065	R/W	0. to 10. (lower limit : b063 - b064 / 2) (%)	1 [%]
1345h to 1348h	(Reserved)	–	–	–	
1349h	Analog operation level at O disconnection	b070	R/W	0 to 100 (%) or “no” (ignore)	1 [%]
134Ah	Analog operation level at OI disconnection	b071	R/W	0 to 100 (%) or “no” (ignore)	1 [%]
134Bh to 134Dh	(reserved)	–	–	–	–
134Eh	Ambient temperature	b075	R/W	-10 to 50	1 [ºC]
134Fh to 1350	(reserved)	–	–	–	–
1351h	Integrated power clear	b078	R/W	Clearance by setting “01”	–
1352h	Integrated power display gain	b079	R/W	1 to 1000	1
1353h to 1354h	(Reserved)	–	–	–	–
1355h	Starting frequency	b082	R/W	10 to 999	0.01 [Hz]
1356h	Carrier frequency	b083	R/W	20 to 150	0.1 [kHz]
1357h	Initialization selection	b084	R/W	00 (clears the trip monitor),01 (initializes data), 02 (clears the trip monitor and initializes data), 03 (clears the trip monitor and parameters), 4 (clears the trip monitor, parameters Drive program)	–
1358h	Initialization parameter selection	b085	R/W	00 (JPN), 01 (EUR)	–
1359h	Frequency conversion coefficient	b086	R/W	1 to 9999	0.01
135Ah	STOP key selection	b087	R/W	00 (enabling), 01 (disabling), 02 (disabling only stop)	–
135Bh	Free-run stop selection	b088	R/W	0 (starting with 0 Hz), 1 (starting with matching frequency), 2 (starting with active matching frequency)	-
135Ch	Automatic carrier frequency reduction	b089	R/W	00 (0 Hz start)/ 01 (frequency matching start)/ 02 (active frequency matching restart)	–
135Dh	Usage rate of regenerative braking function	b090	R/W	0 to 1000	0.1 [%]
135Eh	Stop selection	b091	R/W	00 (deceleration until stop), 01 (free-run stop)	–
135Fh	Cooling fan control	b092	R/W	00 (always ON), 01 (ON during RUN), 02 (ON by temp)	–
1360h	Clear elapsed time of cooling fan	b093	R/W	00 (OFF)/ 01 (CLR)	–
1361h	Initialization target data	b094	R/W	00 (ALL)/ 01 (Exp.COM, TERM)/ 02 (Only U***)/ 03 (All exp.U***)	–
1362h	Regenerative braking function operation selection	b095	R/W	00 (disabling), 01 (enabling [disabling while the motor is stopped]), 02 (enabling [enabling also while the motor is stopped])	
1363h	Regenerative braking function ON level	b096	R/W	330 to 380, 660 to 760	1. [V]
1364h	BRD resistor	b097	R/W	Min. Resitance to 600.0	0.1 [Ω]
1365h to 1366h	(Reserved)	–	–	–	–
1367h	Free V/f frequency 1	b100	R/W	0. to “Free V/f frequency 2”	1 [Hz]
1368h	Free V/f voltage 1	b101	R/W	0. to 8000	0.1 [V]
1369h	Free V/f frequency 2	b102	R/W	0. to “Free V/f frequency 3”	1 [Hz]
136Ah	Free V/f voltage 2	b103	R/W	0. to 8000	0.1 [V]
136Bh	Free V/f frequency 3	b104	R/W	0. to “Free V/f frequency 4”	1 [Hz]
136Ch	Free V/f voltage 3	b105	R/W	0. to 8000	0.1 [V]
136Dh	Free V/f frequency 4	b106	R/W	0. to “Free V/f frequency 5”	1 [Hz]
136Eh	Free V/f voltage 4	b107	R/W	0. to 8000	0.1 [V]
136Fh	Free V/f frequency 5	b108	R/W	0. to “Free V/f frequency 6”	1 [Hz]

Register No.	Function name	Function code	R/W	Monitoring and setting items	Data resolution
1370h	Free V/f voltage 5	b109	R/W	0. to 8000	0.1 [V]
1371h	Free V/f frequency 6	b110	R/W	0. to “Free V/f frequency 7”	1 [Hz]
1372h	Free V/f voltage 6	b111	R/W	0. to 8000	0.1 [V]
1373h	Free V/f frequency 7	b112	R/W	0. to 400.	1 [Hz]
1374h	Free V/f voltage 7	b113	R/W	0. to 8000	0.1 [V]
1375h to 137Ah	(Reserved)	–	–	–	–
137Bh	Brake control selection	b120	R/W	00 (disabling), 01 (enabling), 02 (enable without DC injection)	–
137Ch	Brake wait time for release	b121	R/W	0 to 500	0.01 [sec.]
137Dh	Brake wait time for acceleration	b122	R/W	0 to 500	0.01 [sec.]
137Eh	Brake wait time for stopping	b123	R/W	0 to 500	0.01 [sec.]
137Fh	Brake wait time for confirmation	b124	R/W	0 to 500	0.01 [sec.]
1380h	Brake release frequency	b125	R/W	0 to 40000	0.01 [Hz]
1381h	Brake release current	b126	R/W	0.0 to 3.20 x Rated current	0.1 [%]
1382h	Braking input frequency	b127	R/W	0 to 40000	0.01 [Hz]
1383h	(Reserved)	–	–	–	–
1384h	(Reserved)	–	–	–	–
1385h	Overvoltage protection function selection during deceleration	b130	R/W	00 (disabling), 01 (enabling), 02 (enabling with acceleration)	–
1386h	Overvoltage protection level during deceleration	b131	R/W	200 V class: 330 to 390 (V) 400 V class: 660 to 780 (V)	1 [V]
1387h	Overvoltage protection parameter	b132	R/W	10 to 3000	0.01 [sec.]
1388h	Overvoltage protection proportional gain setting	b133	R/W	0 to 500	0.01
1389h	Overvoltage protection integral time setting	b134	R/W	0 to 1500	0.1 [sec.]
138Ah to 1393h	(Reserved)	–	–	–	–
1394h	GS input mode	b145	R/W	00 (no trip)/ 01 (trip)	–
1395h to 1399h	(Reserved)	–	–	–	–
139Ah	Display ex.operator connected	b150	R/W	001 to 060	-
139Bh to 13A2h	(Reserved)	–	–	–	–
13A3h	1st parameter of Dual Monitor	b160	R/W	001 to 030	–
13A4h	2nd parameter of Dual Monitor	b161	R/W	001 to 030	–
13A5h	(Reserved)	–	–	–	–
13A6h	Freq. set in monitoring	b163	R/W	00 (disabling), 01 (enabling),	–
13A7h	Auto return initial display	b164	R/W	00 (disabling), 01 (enabling),	–
13A8h	Ex. Operator com. loss action	b165	R/W	00 (trip), 01 (decel-trip), 02 (ignore), 03 (Free RUN), 04 (decel-stop)	–
13A9h	Data Read/Write selection	b166	R/W	00 (Read/Write OK), 01 (Protected)	–
13AAh to 13ADh	(Reserved)	–	–	–	–
13AEh	Inverter mode selection	b171	R/W	00 (no), 01 (Std.IM), 02 (Reserved), 03 (PM)	–
13AFh to 13B6h	(Reserved)	–	–	–	–
13B7h	Initialize trigger	b180	R/W	00 (no action), 01 (initialize)	–
13B8h to 13C5h	(Reserved)	–	–	–	–
13C6h	E. thermal Dec Mode	b910	R/W	00 (Off), 01 (Fixed Linear), 02 (LinDec Time), 03 (DecTimeCnst)	–
13C7h to 13C8h	E. thermal Dec Time	b911	R/W	0.10 to 100000.00	0.01 [sec.]
13C9h to 13CAh	E. thermal Dec TimeCnst	b912	R/W	0.10 to 100000.00	0.01 [sec.]
13CBh	E. thermal AccmGain	b913	R/W	1.0 to 200.0	0.1 [sec.]
13CCh to 1400h	unused	–	–	Inaccessible	–

Parameter group C

Register No.	Function name	Function code	R/W	Monitoring and setting items	Data resolution
1401h	Multi-function input 1 selection	C001	R/W	00 (FW: Forward RUN), 01 (RV: Reverse RUN), 02 (CF1: Multispeed 1 setting), 03 (CF2: Multispeed 2 setting), 04 (CF3: Multispeed 3 setting), 05 (CF4: Multispeed 4 setting), 06 (JG: Jogging), 07 (DB: external DC braking), 08 (SET: Set 2nd motor data), 09 (2CH: 2-stage acceleration/deceleration), 11 (FRS: free-run stop), 12 (EXT: external trip), 13 (USP: unattended start protection), 14: (CS: commercial power source enable), 15 (SFT: software lock), 16 (AT: analog input voltage/current select), 18 (RS: reset), 20 (STA: starting by 3-wire input), 21 (STP: stopping by 3-wire input), 22 (F/R: forward/reverse switching by 3-wire input), 23 (PID: PID disable), 24 (PIDC: PID reset, 27 (UP: remote control UP function), 28 (DWN: remote control DOWN function), 29 (UDC: remote control data clearing), 31 (OPE: forcible operation), 32 (SF1: multispeed bit 1), 33 (SF2: multispeed bit 2), 34 (SF3: multispeed bit 3), 35 (SF4: multispeed bit 4), 36 (SF5: multispeed bit 5), 37 (SF6: multispeed bit 6), 38 (SF7: multispeed bit 7), 39 (OLR: overload restriction selection), 40 (TL: torque limit enable), 41 (TRQ1: torque limit selection bit 1), 42 (TRQ2: torque limit selection bit 2), 44 (BOK: braking confirmation), 46 (LAC: LAD cancellation), 47 (PCLR: clearance of position deviation), 50 (ADD: trigger for frequency addition [A145]), 51 (F-TM: forcible-terminal operation), 52 (ATR: permission of torque command input), 53 (KHC: cumulative power clearance), 56 (MI1: general-purpose input 1), 57 (MI2: general-purpose input 2), 58 (MI3: general-purpose input 3), 59 (MI4: general-purpose input 4), 60 (MI5: general-purpose input 5), 61 (MI6: general-purpose input 6), 62 (MI7: general-purpose input 7), 65 (AHD: analog command holding), 66 (CP1: multistage position settings selection 1), 67 (CP2: multistage position settings selection 2), 68 (CP3: multistage position settings selection 3), 69 (ORL: Zero-return limit function), 70 (ORG: Zero-return trigger function), 73 (SPD: speed / position switching), 77 (GS1: safety input 1), 78 (GS2: safety input 2), 81 (485: EzCOM), 82 (PRG: executing Drive Programming), 83 (HLD: retain output frequency), 84 (ROK: permission of run command), 85 (EB: Rotation direction detection(for V/f with ENC), 86 (DISP: Display limitation), 90 (UIO: Unprotected inverter operation), 91 (PSET: preset position), 255 (no).	–
1402h	Multi-function input 2 selection	C002	R/W		–
1403h	Multi-function input 3 selection	C003	R/W		–
1404h	Multi-function input 4 selection	C004	R/W		–
1405h	Multi-function input 5 selection	C005	R/W		–
1406h	Multi-function input 6 selection	C006	R/W		–
1407h	Multi-function input 7 selection	C007	R/W		–
1408h to 140Ah	(Reserved)	-	-	Inaccessible	–
140Bh	Multi-function input 1 operation selection	C011	R/W	00 (NO), 01 (NC)	–
140Ch	Multi-function input 2 operation selection	C012	R/W	00 (NO), 01 (NC)	–
140Dh	Multi-function input 3 operation selection	C013	R/W	00 (NO), 01 (NC)	–

Register No.	Function name	Function code	R/W	Monitoring and setting items	Data resolution
140Eh	Multi-function input 4 operation selection	C014	R/W	00 (NO), 01 (NC)	–
140Fh	Multi-function input 5 operation selection	C015	R/W	00 (NO), 01 (NC)	–
1410h	Multi-function input 6 operation selection	C016	R/W	00 (NO), 01 (NC)	–
1411h	Multi-function input 7 operation selection	C017	R/W	00 (NO), 01 (NC)	–
1412h to 1414h	(Reserved)	–	–	Inaccessible	–
1415h	Multi-function output terminal 11 selection	C021	R/W	00 (RUN: running), 01 (FA1: constant-speed reached), 02 (FA2: set frequency overreached), 03 (OL: overload notice advance signal (1)), 04 (OD: output deviation for PID control), 05 (AL: alarm signal), 06 (FA3: set frequency reached), 07 (OTQ: over-torque), 09 (UV: undervoltage), 10 (TRQ: torque limited), 11 (RNT: operation time over), 12 (ONT: plug-in time over), 13 (THM: thermal alarm signal), 19 (BRK: brake release), 20 (BER: braking error), 21 (ZS: 0 Hz detection signal), 22 (DSE: speed deviation maximum), 23 (POK: positioning completed), 24 (FA4: set frequency overreached 2), 25 (FA5: set frequency reached 2), 26 (OL2: overload notice advance signal (2)), 31 (FBV: PID feedback comparison), 32 (NDc: communication line disconnection), 33 (LOG1: logical operation result 1), 34 (LOG2: logical operation result 2), 35 (LOG3: logical operation result 3), 39 (WAC: capacitor life warning), 40 (WAF: cooling-fan), 41 (FR: starting contact signal), 42 (OHF: heat sink overheat warning), 43 (LOC: low-current indication signal), 44 (M01: general-purpose output 1), 45 (M02: general-purpose output 2), 46 (M03: general-purpose output 3), 50 (IRDY: inverter ready), 51 (FWR: forward rotation), 52 (RVR: reverse rotation), 53 (MJA: major failur), 54 (WCO: window comparator O), 55 (WCOI: window comparator OI), 58(FREF), 59(REF), 60(SETM),	–
1416h	Multi-function output terminal 12 selection	C022	R/W		–
1421h to 1423h	(Reserved)	–	–		–
141Ah	Relay output (AL2, AL1) function selection	C026	R/W		–
141Bh	[EO] terminal selection	C027	R/W	00 (output frequency), 01 (output current), 02 (output torque), 03 (digital output frequency), 04 (output voltage), 05 (input power), 06 (electronic thermal overload), 07 (LAD frequency), 08 (digital current monitoring), 10 (heat sink temperature), 12 (general-purpose output YA0),15 (pulse input),16 (option)	–
141Ch	AM selection	C028	R/W	00 (output frequency), 01 (output current), 02 (output torque), 04 (output voltage), 05 (input power), 06 (electronic thermal overload), 07 (LAD frequency), 10 (heat sink temperature), 11 (output torque [signed value]), 13 (general-purpose output YA1),16(option)	–
141Dh	(reserved)	–	–	–	–
141Eh	Digital current monitor reference value	C030	R/W	0.32 x Rated current to 3.20 x Rated current	0.1 [%]
141Fh	Multi-function output terminal 11 contact selection	C031	R/W	00 (NO), 01 (NC)	–

Register No.	Function name	Function code	R/W	Monitoring and setting items	Data resolution
1420h	Multi-function output terminal 12 contact selection	C032	R/W	00 (NO), 01 (NC)	–
1421h to 1423h	(Reserved)	–	–	–	–
1424h	Relay output (AL2, AL1) contact selection	C036	R/W	00 (NO contact at AL2, NC contact at AL1), 01 (NC contact at AL2, NO contact at AL1)	–
1425h	(Reserved)	–	–	–	–
1426h	Light load signal output mode	C038	R/W	00 (output during acceleration/deceleration and constant-speed operation), 01 (output only during constant-speed operation)	–
1427h	Light load detection level	C039	R/W	0.0 to 3.20 x Rated current	0.1 [%]
1428h	Overload warning signal output mode	C040	R/W	00 (output during acceleration/deceleration and constant-speed operation), 01 (output only during constant-speed operation)	–
1429h	Overload warning level	C041	R/W	0.1 to 3.20 x Rated current	0.1 [%]
142Ah	Arrival frequency during acceleration	C042 (high)	R/W	0 to 40000	0.01 [Hz]
142Bh		C042 (low)	R/W		
142Ch	Arrival frequency during deceleration	C043 (high)	R/W	0 to 40000	0.01 [Hz]
142Dh		C043 (low)	R/W		
142Eh	PID deviation excessive level	C044	R/W	0 to 1000	0.1 [%]
142Fh	Arrival frequency during acceleration 2	C045 (high)	R/W	0 to 40000	0.01 [Hz]
1430h		C045 (low)	R/W		
1431h	Arrival frequency during deceleration 2	C046 (high)	R/W	0 to 40000	0.01 [Hz]
1432h		C046 (low)	R/W		
1433h	Pulse train input scale conversion for EO output	C047	R/W	0.01 - 99.99	–
1434h to 1437h	(Reserved)	–	–	–	–
1438h	PID FB upper limit	C052	R/W	0 to 1000	0.1 [%]
1439h	PID FB lower limit	C053	R/W	0 to 1000	0.1 [%]
143Ah	Over-torque/under-torque selection	C054	R/W	00 (Over torque)/ 01 (under torque)	–
143Bh	Overtorque level (forward power running)	C055	R/W	0 to 200	1 [%]
143Ch	Overtorque level (reverse regeneration)	C056	R/W	0 to 200	1 [%]
143Dh	Overtorque level (reverse power running	C057	R/W	0 to 200	1 [%]
143Eh	Overtorque level (forward regeneration)	C058	R/W	0 to 200	1 [%]
143Fh	Signal output mode of Over/ under torque	C059	R/W	00 (output during acceleration/deceleration and constant-speed operation), 01 (output only during constant-speed operation)	–
1440h	(Reserved)	–	–	–	–
1441h	Thermal warning level	C061	R/W	0 to 100	1 [%]
1442h	(Reserved)	–	–	–	
1443h	0 Hz detection level	C063	R/W	0 to 10000	0.01 [Hz]
1444h	Fin overheat warning level	C064	R/W	0 to 110	1 [ºC]
1445h to 144Ah	(Reserved)	–	–	–	–
144Bh	Communication speed selection (Baud rate selection)	C071	R/W	03 (2400bps), 04 (4800bps), 05 (9600bps), 06 (19.2kbps), 07 (38.4kbps), 08 (57.6kbps), 09 (76.8kbps), 10 (115.2kbps)	–
144Ch	Communication station No. Selection	C072	R/W	1 to 247	–
144Dh	(Reserved)	–	–	–	–
144Eh	Communication parity selection	C074	R/W	00 (no parity), 01 (even parity), 02 (odd parity)	–
144Fh	Communication stop bit selection	C075	R/W	1 (1 bit), 2 (2 bits)	–

Register No.	Function name	Function code	R/W	Monitoring and setting items	Data resolution
1450h	Communication error selection	C076	R/W	00 (trip), 01 (tripping after deceleration stop), 02 (ignore), 03 (free-run stop), 04 (deceleration stop)	–
1451h	Communication error timeout	C077	R/W	0 to 9999	0.01 [sec.]
1452h	Communication wait time	C078	R/W	0 to 1000	1 [msec.]
1453h to 1454h	(Reserved)	–	–	–	–
1455h	O adjustment	C081	R/W	0 to 2000	0.1
1456h	OI adjustment	C082	R/W	0 to 2000	0.1
1457h to 1458h	(Reserved)	–	–	–	–
1459h	Thermistor adjustment	C085	R/W	0 to 2000	0.1
145Ah to 145Eh	(Reserved)	–	–	–	–
145Fh	Debug mode selection	C091	R	“00” Do not change	–
1460h to 1463h	(Reserved)	–	–	–	–
1464h	Communication selection	C096	R/W	00 (Modbus-RTU)/ 01(EzCOM)/ 02 (EzCOM<administrator>)	
1465h	(Reserved)	–	–	–	–
1466h	EzCOM start adr. of master	C098	R/W	1~8	
1467h	EzCOM end adr. of master	C099	R/W	1~8	
1468h	EzCOM starting trigger	C100	R/W	00 (485 input)/ 01 (Always ON)	
1469h	UP/DWN selection	C101	R/W	00 (not storing the frequency data), 01 (storing the frequency data)	–
146Ah	Reset selection	C102	R/W	00 (trip reset at power-on), 01 (trip reset when the power is OFF), 02 (enabled only during trip), 03 (trip reset only)	–
146Bh	Restart frequency matching selection	C103	R/W	00 (0 Hz start), 01 (frequency matching start), 02 (active frequency matching restart)	–
146Ch	UP/DWN clear mode	C104	R/W	00 (0Hz)/ 01 (Pow-ON data)	–
146Dh	EO gain setting	C105	R/W	50 to 200	1 [%]
146Eh	AM gain setting	C106	R/W	50 to 200	1 [%]
146Fh	(Reserved)	–	–	Inaccessible	1 [%]
1471h	AM bias setting	C109	R/W	0 to 100	1 [%]
1472h	(Reserved)	–	–	–	1 [%]
1473h	Overload warning level 2	C111	R/W	0.0 to 3.20 x Rated current	0.1 [%]
1474h to 1485h	(Reserved)	–	–	–	–
1486h	Output 11 ON delay	C130	R/W	0 to 1000	0.1 [sec.]
1487h	Output 11 OFF delay	C131	R/W	0 to 1000	0.1 [sec.]
1488h	Output 12 ON delay	C132	R/W	0 to 1000	0.1 [sec.]
1489h	Output 12 OFF delay	C133	R/W	0 to 1000	0.1 [sec.]
148Ah to 148F	(Reserved)	–	–	–	–
1490h	Relay output ON delay	C140	R/W	0 to 1000	0.1 [sec.]
1491h	Relay output OFF delay	C141	R/W	0 to 1000	0.1 [sec.]
1492h	Logic output signal 1 selection 1	C142	R/W	Same as the settings of C021 to C026 (except those of LOG1 to LOG6, OPO, no)	–
1493h	Logic output signal 1 selection 2	C143	R/W	Same as the settings of C021 to C026 (except those of LOG1 to LOG6, OPO, no)	–
1494h	Logical output signal 1 operator selection	C144	R/W	00 (AND), 01 (OR), 02 (XOR)	–
1495h	Logic output signal 2 selection 1	C145	R/W	Same as the settings of C021 to C026 (except those of LOG1 to LOG6, OPO, no)	–
1496h	Logic output signal 2 selection 2	C146	R/W	Same as the settings of C021 to C026 (except those of LOG1 to LOG6, OPO, no)	–
1497h	Logical output signal 2 operator selection	C147	R/W	00 (AND), 01 (OR), 02 (XOR)	–
1498h	Logic output signal 3 selection 1	C148	R/W	Same as the settings of C021 to C026 (except those of LOG1 to LOG6, OPO, no)	–
1499h	Logic output signal 3 selection 2	C149	R/W	Same as the settings of C021 to C026 (except those of LOG1 to LOG6, OPO, no)	–

Register No.	Function name	Function code	R/W	Monitoring and setting items	Data resolution
149Ah	Logical output signal 3 operator selection	C150	R/W	00 (AND), 01 (OR), 02 (XOR)	–
149Bh to 14A3h	(Reserved)	–	–	–	–
14A4h	Input terminal response time 1	C160	R/W	0 to 200	
14A5h	Input terminal response time 2	C161	R/W	0 to 200	
14A6h	Input terminal response time 3	C162	R/W	0 to 200	
14A7h	Input terminal response time 4	C163	R/W	0 to 200	
14A8h	Input terminal response time 5	C164	R/W	0 to 200	
14A9h	Input terminal response time 6	C165	R/W	0 to 200	
14AAh	Input terminal response time 7	C166	R/W	0 to 200	
14ABh to 14ACh	(Reserved)	–	–	–	
14ADh	Multi-step speed/position determination time	C169	R/W	0 to 200	
14A4h to 1500h	unused	–	–	Inaccessible	–

Parameter group H

Register No.	Function name	Function code	R/W	Monitoring and setting items	Data resolution
1501h	Auto-tuning selection	H001	R/W	00 (disabled), 01 (stop), 02 (rotation)	–
1502h	Motor parameter selecion	H002	R/W	00 (Standard motor parameter), 02 (auto-tuning parameter)	–
1503h	Motor capacity selection	H003	R/W	00 (0.1kW) - 15 (18.5kW)	–
1504h	Motor pole number selection	H004	R/W	2/4/6/8/10/12/14/16/18/20/22/24/26/28/30/32/34/36/38/40/42/44/46/48	–
1505h	(Reserved)	–	–	–	–
1506h	Speed response	H005	R/W	1 to 1000	1[%]
1507h	Stabilization parameter	H006	R/W	0 to 255	1
1508h to 1514h	(Reserved)	–	–	–	–
1516h	Motor parameter R1	H020	R/W	1 to 65530	0.001 [O]
1517h	(Reserved)	–	–	–	–
1518h	Motor parameter R2	H021	R/W	1 to 65530	0.001 [O]
1519h	(Reserved)	–	–	–	–
151Ah	Motor parameter L	H022	R/W	1 to 65530	0.01 [mH]
151Bh	(Reserved)	–	–	–	–
151Ch	Motor parameter Io	H023	R/W	1 to 65530	0.01 [A]
151Dh	Motor parameter J	H024 (high)	R/W	1 to 9999000	0.001
151Eh		H024 (low)	R/W		
151Hf to 1524h	(Reserved)	–	–	–	–
1525h	Motor parameter R1 (auto-tuning data)	H030	R/W	1 to 65530	0.001 [O]
1526h	(Reserved)	–	–	Inaccessible	–
1527h	Motor parameter R2 (auto-tuning data)	H031	R/W	1 to 65530	0.001 [O]
1528h	(Reserved)	–	–	–	–
1529h	Motor parameter L (auto-tuning data)	H032	R/W	1 to 65530	0.01 [mH]
152Ah	(Reserved)	-	-	Inaccessible	-
152Bh	Motor parameter Io (auto-tuning data)	H033	R/W	1 to 65530	0.01 [A]
152Ch	Motor parameter J (auto-tuning data)	H034 (high)	R/W	1 to 9999000	0.001
152Dh		H034 (low)	R/W		
152Eh to 153Ch	(Reserved)	–	–	–	–
153Dh	Slip compensation P gain for V/f control with FB	H050	R/W	0 to 10000	0.1
153Eh	Slip compensation I gain for V/f control with FB	H051	R/W	0 to 10000	1
1571h	PM motor code selection	H102	R/W	00 Standard motor parameter 02 Auto-tuning parameter	–
1572h	PM motor capacity	H103	R/W	0.10 to 18.50	–
1573h	PM motor pole number selection	H104	R/W	2/4/6/8/10/12/14/16/18/20/22/24/26/28/30/32/34/36/38/40/42/44/46/48 poles	–
1574h	PM rated current	H105	R/W	0.00 x Rated current to 1.60 x Rated current	0.01 [A]
1575h	PM parameter R	H106	R/W	0.001 to 65.535 Ω	0.001 [Ω]
1576h	PM parameter Ld	H107		0.01 to 655.35 mH	0.01 [mH]
1577h	PM parameter Lq	H108		0.01 to 655.35 mH	0.01 [mH]
1578h	PM parameter Ke	H109		0.0001 to 6.5535 Vp/(rad/s)	0.0001 [Vp/(rad/s)]

Register No.	Function name	Function code	R/W	Monitoring and setting items	Data resolution
1579h to 157Ah	PM parameter J	H110		0.001 - 9999.000 kg/m²	0.001 [kg/m²]
157Bh	PM parameter R (auto-tuning data)	H111		0.001 to 65.535 Ω	0.001 [Ω]
157Ch	PM parameter Ld (auto-tuning data)	H112		0.01 to 655.35 mH	0.01 [mH]
157Dh	PM parameter Lq (auto-tuning data)	H113		0.01 to 655.35 mH	0.01 [mH]
1581h	PM speed response	H116		1 to 1000	–
1582h	PM starting current	H117		20.00 to 100.00%	–
1583h	PM starting time	H118		0.01 to 60.00 s	0.01 [s]
1584h	PM stabilization constant	H119		0 to 120%	–
1586h	PM minimum frequency	H121		0.0 to 25.5%	–
1587h	PM No-Load current	H122		0.00 to 100.00%	–
1588h	PM starting method	H123		00 Normal 01 IMPE	–
158Ah	PM IMPE 0V wait	H131		0 to 255	–
158Bh	PM IMPE detect wait	H132		0 to 255	–
158Ch	PM IMPE detect	H133		0 to 255	–
158Dh	PM IMPE voltage gain	H134		0 to 200	–
158Eh to 1600h	unused	–	–	Inaccessible	–

Parameter group P

Register No.	Function name	Function code	R/W	Monitoring and setting items	Data resolution
1601h	Operation selection at option 1 error	P001	R/W	00 (trip), 01 (continues operation)	–
1602h	(Reserved)	–	–	–	–
1603h	EA terminal selection	P003	R/W	00 (FQ set), 01 (Encoder FB), 02 (EzSQ)	
1604h	Pulse train input mode for feedback	P004	R/W	00 (Single ph.), 01 (2 ph.1), 02 (2 ph.2), 03 (Single+Dir)	
1605h to 160Ah	(Reserved)	–	–	–	–
160Bh	Encoder pulses	P011	R/W	32 to 1024	1
160Ch	Simple positioning selection	P012	R/W	00 (OFF), 02 (ON)	–
160Dh to 160Eh	(Reserved)	–	–	–	–
160Fh	Creep speed	P015	R/W	“start frequency” to 1000	0.01 [Hz]
1610h	(Reserved)	–	–	–	–
1611h	Positioning range	P017	R/W	0 to 10000	pulses
1612h to 1619h	(Reserved)	–	–	–	–
161Ah	Over-speed error detection level	P026	R/W	0 to 1500	0.1 [%]
161Bh	Speed deviation error detection level	P027	R/W	0 to 12000	0.01 [Hz]
161Ch to 161Eh	(Reserved)	–	–	–	–
161Fh	Acceleration/deceleration time input type	P031	R/W	00 (digital operator), 03 (drive programming)	–
1620h	(Reserved)	–	–	–	–
1621h	Torque reference input selection	P033	R/W	00 (terminal O), 01 (terminal OI), 03 (digital operator), 06 (Option 1)	–
1622h	Torque reference setting	P034	R/W	0 to 200	1 [%]
1623h	(Reserved)	–	–	–	–
1624h	Torque bias mode	P036	R/W	00 (none), 01 (digital operator), 05 (option 1)	–
1625h	Torque bias value	P037	R/W	-200 to +200	1 [%]
1626h	Torque bias polarity selection	P038	R/W	00 (signed), 01 (depends on the run direction)	–
1627h	Speed limit value in torque control (forward)	P039 (high)	R/W	0 to 12000	0.01 [Hz]
1628h		P039 (low)	R/W		
1629h	Speed limit value in torque control (reverse)	P040 (high)	R/W	0 to 12000	0.01 [Hz]
162Ah		P040 (low)	R/W		
162Bh	Speed / torque control switching time	P041	R/W	0 to 1000	–
162Ch to 162Dh	(Reserved)	–	–	–	–
162Eh	Network comm. Watchdog timer	P044	R/W	0 to 9999	0.01 [sec.]
162Fh	Operation setting at communications error	P045	R/W	00 (trip), 01 (trip after deceleration stop), 02 (ignore), 03 (free RUN), 04 (deceleration stop)	–
1630h	Instance number	P046	R/W	0-20	–
1631h	(Reserved)	–	–	–	–
1632h	Operation setting at idle mode detection	P048	R/W	00 (trip), 01 (trip after deceleration stop), 02 (ignore), 03 (free RUN), 04 (deceleration stop)	–
1633h	Polarity setting for rotation speed	P049	R/W	2/4/6/8/10/12/14/16/18/20/22/24/26/28/30/32/34/36/38/40/42/44/46/48	–
1634h to 1638h	(Reserved)	–	–	–	–
1639h	Pulse train frequency scale	P055	R/W	10 to 320 (input frequency corresponding to the allowable maximum frequency)	0.1 [kHz]
163Ah	Pulse train frequency filter time constant	P056	R/W	1 to 200	0.01 [sec.]

Register No.	Function name	Function code	R/W	Monitoring and setting items	Data resolution
163Bh	Pulse train frequency bias amount	P057	R/W	-100 to +100	1 [%]
163Ch	Pulse train frequency limit	P058	R/W	0 to 100	1 [%]
163Dh	Pulse input lower cut	P059	R/W	0.01 to 20.00	0.01 [%]
163Eh	Multi-step position command 0	P060(HIGH)	R/W	-268435455 to 268435455	1
163Fh		P060(LOW)	R/W		
1640h	Multi-step position command 1	P061(HIGH)	R/W	-268435455 to 268435455	1
1641h		P061(LOW)	R/W		
1642h	Multi-step position command 2	P062(HIGH)	R/W	-268435455 to 268435455	1
1643h		P062(LOW)	R/W		
1644h	Multi-step position command 3	P063(HIGH)	R/W	-268435455 to 268435455	1
1645h		P063(LOW)	R/W		
1646h	Multi-step position command 4	P064(HIGH)	R/W	-268435455 to 268435455	1
1647h		P064(LOW)	R/W		
1648h	Multi-step position command 5	P065(HIGH)	R/W	-268435455 to 268435455	1
1649h		P065(LOW)	R/W		
164Ah	Multi-step position command 6	P066(HIGH)	R/W	-268435455 to 268435455	1
164Bh		P066(LOW)	R/W		
164Ch	Multi-step position command 7	P067(HIGH)	R/W	-268435455 to 268435455	1
164Dh		P067(LOW)	R/W		
164Eh	Zero return mode	P068	R/W	00 (Low speed) / 01 (High speed)	
164Fh	Zero return direction selection	P069	R/W	00 (FW) / 01 (RV)	
1650h	Low-speed zero return frequency	P070	R/W	0 to 1000	
1651h	High-speed zero return frequency	P071	R/W	0 to 40000	
1652h	Position range specification (forward)	P072(HIGH)	R/W	0 to 268435455	1
1653h		P072(LOW)	R/W		
1654h	Position range specification (reverse)	P073(HIGH)	R/W	-268435455 to 0	1
1655h		P073(LOW)	R/W		
1656h	(Reserved)	–	–	–	–
1657h	Positioning mode	P075	R/W	00…Limit 01…No limit	–
1658h	(Reserved)	–	–	–	–
1659h	Encoder disconnection timeout	P077	R/W	0 to 100	0.1[sec.]
165Ah to 165Bh	(Reserved)	–	–	–	–
165Ch	Position restarting range	P080	R/W	0 to 10000	pulses
165Dh	Save position at power off	P081	R/W	00…OFF 01…ON	–
165Eh	Curnt pos at poff	P082	R/W	-268435455 to 268435455	1
165Fh	(Reserved)	–	–	–	–
1660h	Preset position data	P083	R/W	-268435455 to 268435455	1
1661h to 1665h	(Reserved)	–	–	–	–
1666h	Drive Program parameter U(00)	P100	R/W	0 to 65535	1
1667h	Drive Program parameter U(01)	P101	R/W	0 to 65535	1
1668h	Drive Program parameter U(02)	P102	R/W	0 to 65535	1
1669h	Drive Program parameter U(03)	P103	R/W	0 to 65535	1
166Ah	Drive Program parameter U(04)	P104	R/W	0 to 65535	1
166Bh	Drive Program parameter U(05)	P105	R/W	0 to 65535	1
166Ch	Drive Program parameter U(06)	P106	R/W	0 to 65535	1
166Dh	Drive Program parameter U(07)	P107	R/W	0 to 65535	1
166Eh	Drive Program parameter U(08)	P108	R/W	0 to 65535	1
166Fh	Drive Program parameter U(09)	P109	R/W	0 to 65535	1
1670h	Drive Program parameter U(10)	P110	R/W	0 to 65535	1
1671h	Drive Program parameter U(11)	P111	R/W	0 to 65535	1
1672h	Drive Program parameter U(12)	P112	R/W	0 to 65535	1
1673h	Drive Program parameter U(13)	P113	R/W	0 to 65535	1
1674h	Drive Program parameter U(14)	P114	R/W	0 to 65535	1
1675h	Drive Program parameter U(15)	P115	R/W	0 to 65535	1
1676h	Drive Program parameter U(16)	P116	R/W	0 to 65535	1
1677h	Drive Program parameter U(17)	P117	R/W	0 to 65535	1

Register No.	Function name	Function code	R/W	Monitoring and setting items	Data resolution
1678h	Drive Program parameter U(18)	P118	R/W	0 to 65535	1
1679h	Drive Program parameter U(19)	P119	R/W	0 to 65535	1
167Ah	Drive Program parameter U(20)	P120	R/W	0 to 65535	1
167Bh	Drive Program parameter U(21)	P121	R/W	0 to 65535	1
167Ch	Drive Program parameter U(22)	P122	R/W	0 to 65535	1
167Dh	Drive Program parameter U(23)	P123	R/W	0 to 65535	1
167Eh	Drive Program parameter U(24)	P124	R/W	0 to 65535	1
167Fh	Drive Program parameter U(25)	P125	R/W	0 to 65535	1
1680h	Drive Program parameter U(26)	P126	R/W	0 to 65535	1
1681h	Drive Program parameter U(27)	P127	R/W	0 to 65535	1
1682h	Drive Program parameter U(28)	P128	R/W	0 to 65535	1
1683h	Drive Program parameter U(29)	P129	R/W	0 to 65535	1
1684h	Drive Program parameter U(30)	P130	R/W	0 to 65535	1
1685h	Drive Program parameter U(31)	P131	R/W	0 to 65535	1
1686h to 168Dh	(Reserved)	–	–	–	–
168Eh	EzCOM number of data	P140	R/W	1 to 5	–
168Fh	EzCOM destination 1 address	P141	R/W	1 to 247	–
1690h	EzCOM destination 1 register	P142	R/W	0000 to FFFF	–
1691h	EzCOM source 1 register	P143	R/W	0000 to FFFF	–
1692h	EzCOM destination 2 address	P144	R/W	1 to 247	–
1693h	EzCOM destination 2 register	P145	R/W	0000 to FFFF	–
1694h	EzCOM source 2 register	P146	R/W	0000 to FFFF	–
1695h	EzCOM destination 3 address	P147	R/W	1 to 247	–
1696h	EzCOM destination 3 register	P148	R/W	0000 to FFFF	–
1697h	EzCOM source 3 register	P149	R/W	0000 to FFFF	–
1698h	EzCOM destination 4 address	P150	R/W	1 to 247	–
1699h	EzCOM destination 4 register	P151	R/W	0000 to FFFF	–
169Ah	EzCOM source 4 register	P152	R/W	0000 to FFFF	–
169Bh	EzCOM destination 5 address	P153	R/W	1 to 247	–
169Ch	EzCOM destination 5 register	P154	R/W	0000 to FFFF	–
169Dh	EzCOM source 5 register	P155	R/W	0000 to FFFF	–
169Eh~16A1h	(Reserved)	–	–	–	–
16A2h	Option I/F cmd W register 1	P160	R/W	0000 to FFFF	–
16A3h	Option I/F cmd W register 2	P161	R/W	0000 to FFFF	–
16A4h	Option I/F cmd W register 3	P162	R/W	0000 to FFFF	–
16A5h	Option I/F cmd W register 4	P163	R/W	0000 to FFFF	–
16A6h	Option I/F cmd W register 5	P164	R/W	0000 to FFFF	–
16A7h	Option I/F cmd W register 6	P165	R/W	0000 to FFFF	–
16A8h	Option I/F cmd W register 7	P166	R/W	0000 to FFFF	–
16A9h	Option I/F cmd W register 8	P167	R/W	0000 to FFFF	–
16AAh	Option I/F cmd W register 9	P168	R/W	0000 to FFFF	–
16ABh	Option I/F cmd W register 10	P169	R/W	0000 to FFFF	–
16ACh	Option I/F cmd R register 1	P170	R/W	0000 to FFFF	–
16ADh	Option I/F cmd R register 2	P171	R/W	0000 to FFFF	–
16AEh	Option I/F cmd R register 3	P172	R/W	0000 to FFFF	–
16AFh	Option I/F cmd R register 4	P173	R/W	0000 to FFFF	–
16B0h	Option I/F cmd R register 5	P174	R/W	0000 to FFFF	–
16B1h	Option I/F cmd R register 6	P175	R/W	0000 to FFFF	–
16B2h	Option I/F cmd R register 7	P176	R/W	0000 to FFFF	–
16B3h	Option I/F cmd R register 8	P177	R/W	0000 to FFFF	–
16B4h	Option I/F cmd R register 9	P178	R/W	0000 to FFFF	–
16B5h	Option I/F cmd R register 10	P179	R/W	0000 to FFFF	–
16B6h	Profibus node address	P180	R/W	0 to 125	–
16B7h	Profibus clear mode	P181	R/W	00 (clear)/ 01 (last value)	–
16B8h	Profibus map selection	P182	R/W	00 (PPO)/ 01 (Convertional)/ 02 (Flexible mode)	–
16B9h to 16BAh	(Reserved)	–	–	–	–
16BBh	CANopen node address	P185	R/W	0 to 127	–

Register No.	Function name	Function code	R/W	Monitoring and setting items	Data resolution
16BCh	CAN open communication speed	P186	R/W	00 (auto) 05 (250kbps) 01 (10kbps) 06 (500kbps) 02 (20kbps) 07 (800kbps) 03 (50kbps) 08 (1Mbps) 04 (125kbps)	–
16BDh to 16BFh	Unused	–	–	–	–
16C0h	CompoNet node address	P190	R/W	0 to 63	–
16C2h	DeviceNet node address	P192	R/W	0 to 63	–
16C3h to 16C7h	Unused	–	–	–	–
16C8h	Serial comms mode	P200	R/W	00…Standard 01…Free mapping	–
16C9h	Modbus external register 1	P201	R/W	0000 to FFFF	–
16CAh	Modbus external register 2	P202	R/W	0000 to FFFF	–
16CBh	Modbus external register 3	P203	R/W	0000 to FFFF	–
16CCh	Modbus external register 4	P204	R/W	0000 to FFFF	–
16CDh	Modbus external register 5	P205	R/W	0000 to FFFF	–
16CEh	Modbus external register 6	P206	R/W	0000 to FFFF	–
16CFh	Modbus external register 7	P207	R/W	0000 to FFFF	–
16D0h	Modbus external register 8	P208	R/W	0000 to FFFF	–
16D1h	Modbus external register 9	P209	R/W	0000 to FFFF	–
16D2h	Modbus external register 10	P210	R/W	0000 to FFFF	–
16D3h	Modbus register format 1	P211	R/W	00…Unsigned 01…Signed	–
16D4h	Modbus register format 2	P212	R/W	00…Unsigned 01…Signed	–
16D5h	Modbus register format 3	P213	R/W	00…Unsigned 01…Signed	–
16D6h	Modbus register format 4	P214	R/W	00…Unsigned 01…Signed	–
16D7h	Modbus register format 5	P215	R/W	00…Unsigned 01…Signed	–
16D8h	Modbus register format 6	P216	R/W	00…Unsigned 01…Signed	–
16D9h	Modbus register format 7	P217	R/W	00…Unsigned 01…Signed	–
16DAh	Modbus register format 8	P218	R/W	00…Unsigned 01…Signed	–
16DBh	Modbus register format 9	P219	R/W	00…Unsigned 01…Signed	–
16DCh	Modbus register format 10	P220	R/W	00…Unsigned 01…Signed	–
16DDh	Modbus register scaling 1	P221	R/W	0.001 to 65.535	0.001
16DEh	Modbus register scaling 2	P222	R/W	0.001 to 65.535	0.001
16DFh	Modbus register scaling 3	P223	R/W	0.001 to 65.535	0.001
16E0h	Modbus register scaling 4	P224	R/W	0.001 to 65.535	0.001
16E1h	Modbus register scaling 5	P225	R/W	0.001 to 65.535	0.001
16E2h	Modbus register scaling 6	P226	R/W	0.001 to 65.535	0.001
16E3h	Modbus register scaling 7	P227	R/W	0.001 to 65.535	0.001
16E4h	Modbus register scaling 8	P228	R/W	0.001 to 65.535	0.001
16E5h	Modbus register scaling 9	P229	R/W	0.001 to 65.535	0.001
16E6h	Modbus register scaling 10	P230	R/W	0.001 to 65.535	0.001
16E7h	Modbus internal register 1	P301	R/W	0000 to FFFF	–
16E8h	Modbus internal register 2	P302	R/W	0000 to FFFF	–
16E9h	Modbus internal register 3	P303	R/W	0000 to FFFF	–
16EAh	Modbus internal register 4	P304	R/W	0000 to FFFF	–
16EBh	Modbus internal register 5	P305	R/W	0000 to FFFF	–
16ECh	Modbus internal register 6	P306	R/W	0000 to FFFF	–
16EDh	Modbus internal register 7	P307	R/W	0000 to FFFF	–
16EEh	Modbus internal register 8	P308	R/W	0000 to FFFF	–
16EFh	Modbus internal register 9	P309	R/W	0000 to FFFF	–
16F0h	Modbus internal register 10	P310	R/W	0000 to FFFF	–

Register No.	Function name	Function code	R/W	Monitoring and setting items	Data resolution
16F1h	Big/Little endian selection	P400	R/W	00…Big endian 01…Little endian 02…Special endian	–
16F2 to 1E00h	Unused	–	–	–	–
1E01h	Coil data 1	–	R/W	2^1: coil number 0010h - 2^{15}: coil number 001Fh -	–
1E02h	Coil data 2	–	R/W	2^1: coil number 0020h - 2^{15}: coil number 002Fh -	–
1E03h	Coil data 3	–	R/W	2^1: coil number 0030h - 2^{15}: coil number 003Fh -	–
1E04h	Coil data 4	–	R/W	2^1: coil number 0030h - 2^{15}: coil number 003Fh -	–
1E05h	Coil data 5	–	R/W	2^1: coil number 0040h - 2^{15}: coil number 004Fh -	–
1E06h to 1F18h	(reserved)	–	-	–	–
1E19h to 1F00h	Unused	–	–	–	–
1F01h	Coil data 0	–	R/W	2^1: coil number 0001h - 2^{15}: coil number 000Fh -	–
1F02h to 1F1Dh	(reserved)	–	–	(note: 2)	–
1F1Eh to 2102h	Unused	–	–	Inaccessible	–

Note 1 Above register (coil data 0 to 5) is consisted with 16 coil data. EzCOM communication (inverter to inverter) doesn't support coil, but only register is supporte, in case of need to access coil, please use above registers.

Note 2 Be sure not to write into above 1F02h to 1F1Dh.

(vi) List of registers (2nd control settings)

Register No.	Function name	Function code	R/W	Monitoring and setting items	Data resolution
2103h	2nd acceleration time 1	F202 (high)	R/W	1 to 360000	0.01 [sec.]
2104h		F202 (low)	R/W		
2105h	2nd deceleration time 1	F203 (high)	R/W	1 to 360000	0.01 [sec.]
2106h		F203 (low)	R/W		
2107h to 2200h	unused	–	–	Inaccessible	–

(vii) List of registers (function modes for the 2nd control settings)

Register No.	Function name	Function code	R/W	Monitoring and setting items	Data resolution
2201h	Frequency reference selection, 2nd motor	A201	R/W	00 (digital operator), 01 (terminal), 02 (operator), 03 (Modbus communication), 04 (option), 06 (pulse train frequency), 7 (drive programming), 10 (operation function result)	–
2202h	RUN command selection. 2nd motor	A202	R/W	01 (terminal), 02 (operator), 03 (Modbus communication), 04 (option)	–
2203h	2nd set base frequency	A203	R/W	300 to “maximum frequency, 2nd motor”	0.1 [Hz]
2204h	2nd maximum frequency	A204	R/W	300 to 4000	0.1 [Hz]
2205h to 2215h	(Reserved)	–	–	Inaccessible	–
2216h	2nd multi-step speed reference 0	A220 (high)	R/W	0 or “start frequency” to “maximum frequency, 2nd motor”	0.01 [Hz]
2217h		A220 (low)	R/W		
2218h to 223Ah	(Reserved)	–	–	Inaccessible	–
223Bh	2nd torque boost selection	A241	R/W	00 (manual torque boost), 01 (automatic torque boost)	–
223Ch	2nd torque boost voltage	A242	R/W	20 to 200	1 [%]
223Dh	2nd manual torque boost frequency	A243	R/W	0 to 50	1 [%]
223Eh	2nd V/f characteristics selection	A244	R/W	00 (VC), 01 (VP), 02 (free V/f), 03 (sensorless vector control)	-
223Fh	Output voltage gain, 2nd motor	A245	R/W	20 to 100	1 [%]
2240h	2nd automatic torque boost voltage compensation gain	A246	R/W	0 to 255	1
2241h	2nd automatic torque boost slip compensation gain	A247	R/W	0 to 255	1
2242h to 224Eh	(Reserved)	–	–	Inaccessible	–
224Fh	2nd frequency upper limit	A261 (high)	R/W	00 or “2nd minimum frequency limit” to “maximum frequency, 2nd motor”	0.01 [Hz]
2250h		A261 (low)	R/W		
2251h	2nd frequency lower limit	A262 (high)	R/W	00 or “start frequency” to “maximum frequency, 2nd motor limit”	0.01 [Hz]
2252h		A262 (low)	R/W		
2253h to 2268h	(Reserved)	–	–	Inaccessible	–
2269h	AVR selection, 2nd motor	A281	R/W	00 (always on), 01 (always off), 02 (off during deceleration)	–
226Ah	AVR voltage selection, 2nd motor	A282	R/W	200 V class: 0 (200)/1 (215)/2 (220)/ 3 (230)/ 4 (240) 400 V class: 5 (380)/6 (400)/7 (415)/ 8 (440)/9 (460)/ 10 (480)	
226Bh to 226Eh	(Reserved)	–	–	Inaccessible	–
226Fh	2nd acceleration time 2	A292 (high)	R/W	1 to 360000	0.01 [sec.]
2270h		A292 (low)	R/W		

Register No.	Function name	Function code	R/W	Monitoring and setting items	Data resolution
2271h	2nd deceleration time 2	A293 (high)	R/W	1 to 360000	0.01 [sec.]
2272h		A293 (low)	R/W		
2273h	Select method to switch to Acc2/ Dec2 profile, 2nd motor	A294	R/W	00 (switching by 2CH terminal), 01 (switching by setting), 02 (switching only when the rotation is forward/reversed)	–
2274h	Acc1 to Acc2 frequency transition point, 2nd motor	A295 (high)	R/W	0 to 40000	0.01 [Hz]
2275h		A295 (low)	R/W		
2276h	Dec1 to Dec2 frequency transition point, 2nd motor	A296 (high)	R/W	0 to 40000	0.01 [Hz]
2277h		A296 (low)	R/W		
2278h to 230Bh	(Reserved)	–	–	–	–
230Ch	2nd electronic thermal level	b212	R/W	0.20 x Rated current to 1.00 x Rated current	0.1 [%]
230Dh	2nd electronic thermal characteristics selection	b213	R/W	00 (reduced TRQ), 01 (constant torque characteristics), 02 (free setting)	–
230Eh to 2315h	(Reserved)	–	–	–	–
2316h	Overload limit selection, 2nd motor	b221	R/W	00 (disabling), 01 (enabling during acceleration and constant-speed operation), 02 (enabling during constant-speed operation), 03 (enabling during acceleration and constant-speed operation [speed increase at regeneration])	–
2317h	Overload limit level, 2nd motor	b222	R/W	100 to 2000	0.1[%]
2318h	Overload limit parameter, 2nd motor	b223	R/W	1 to 30000	0.1[?]
2319h to 2428h	unused	–	–	Inaccessible	–
2429h	Overload warning level 2, 2nd motor	C241	R/W	0 to 2000	0.1[%]
242Ah to 2501h	Unused	–	–	Inaccessible	–
2502h	2nd motor parameter selection	H202	R/W	00 (standard motor parameter), 02 (auto-tuning parameter)	–
2503h	2nd motor capacity selection	H203	R/W	00 (0.1kW) - 15 (18.5kW)	–
2504h	2nd motor pole number selection	H204	R/W	2/4/6/8/10/12/14/16/18/20/22/24/26/28/ 30/32/34/36/38/40/42/44/46/48	–
2505h	2nd speed response	H205	R/W	1 to 1000	1[%]
2506h	2nd stabilization parameter	H206	R/W	0 to 255	1
2507h	(Reserved)	–	–	–	–
2508h to 2515h	(Reserved)	–	–	–	–
2516h	2nd motor parameter R1	H220 (high)	R/W	1 to 65535	0.001 [O]
2517h	(Reserved)	–	–	–	–
2518h	2nd motor parameter R2	H221 (high)	R/W	1 to 65535	0.001 [O]
2519h	(Reserved)	–	–	–	–
251Ah	2nd motor parameter L	H222 (high)	R/W	1 to 65535	0.01 [mH]
251Bh	(Reserved)	–	–	–	–
251Ch	2nd motor parameter Io	H223 (high)	R/W	1 to 65535	0.01 [A]
251Dh	2nd motor parameter J	H224 (high)	R/W	1 to 9999000	0.001
251Eh		H224 (low)	R/W		
251Fh to 2524h	(Reserved)	–	–	–	–
2525h	2nd motor parameter R1 (auto-tuning data)	H230 (high)	R/W	1 to 65530	0.001 [O]
2526h	(Reserved)	–	–	–	–

Register No.	Function name	Function code	R/W	Monitoring and setting items	Data resolution
2527h	2nd motor parameter R2 (auto-tuning data)	H231 (high)	R/W	1 to 65530	0.001 [O]
2528h	(Reserved)	–	–	–	–
2529h	2nd motor parameter L (auto-tuning data)	H232 (high)	R/W	1 to 65530	0.01 [mH]
252Ah	(Reserved)	–	–	–	–
252Bh	2nd motor parameter Io (auto-tuning data)	H233 (high)	R/W	1 to 65530	0.01 [A]
252Ch	2nd motor parameter J (auto-tuning data)	H234 (high)	R/W	1 to 9999000	0.001
252Dh		H234 (low)	R/W		
252Eh ~	Unused	–	–	Inaccessible	–

B-5 ModBus mapping

B-5-1 Modbus mapping function

B-5-1-1 Functional outline

An existing register number is allocated in an arbitrary register number.

The list of the communication that can use this function is shown below.

No.	Communication
1	Option board
2	Modbus (RS485)
3	USB

B-5-1-2 Setting parameter

Setting parameters of Modbus mapping function:

P200 (Serial comms mode): Communication mode selection

P201 to P210 (Modbus external register 1 to 10): External register selection

P211 to P220 (Modbus register format 1 to 10): Format of external register

P221 to P230 (Modbus register scaling 1 to 10): Scaling data

P301 to P310 (Modbus internal register 1 to 10): Internal register selection

The number of set registers is limited to 10.

B-5-1-2-1 P200 (Serial comms mode): Communication mode selection

Func. Code	Name	Settings	EU
P200	Serial comms mode	00: Standard 01: Free mapping	00

00: Standard Modbus registers according with Appendix B-4 list.

01: Free mapping where special registers on parameters P201 to P210 could be used.

When the setting is changed, new configuration will be reflected immediately. (But only if inverter is not in RUN.)

Please don't access the register relevant to Modbus mapping at the time of P200 data change to avoid unexpected operation.

P201 to P230, P301 to P310: When this parameters are modified is necessary to recycle power supply for this changes to become effective.

B-5-1-2-2 P201-P210 (Modbus external register 1 to 10): External register select

Func. Code	Name	Settings	EU
P201 to P210	Modbus external register 1 to 10	0000h to FFFFh	0000h

Defines the addresses to be used by the external controller.

0000h is considered as not used.

B-5-1-2-3 P301-P310 (Modbus internal register 1 to 10): Internal register selection

Func. Code	Name	Settings	EU
P301 to P310	Modbus internal register 1 to 10	0000h to FFFFh	0000h

Defines the internal register address that will be linked to external registers in parameters P201 to P210.

0000h is considered as not used.

Only single word registers could be addressed but some double word registers could be accessed by a single word with limited range. Check next table for details.

Register No.	R/W	Function name	Data range
1E21h	R	(d001) Output frequency monitor	0.00 to 400.00 [Hz]
1E22h	R	(d004) PID feedback value monitor	0.00 to 10000
1E23h	R	(d007) Output frequency monitor	0.00 to 40000.00
1E24h	R	(d008) Real frequency monitor	-327.68 to 327.68 [Hz]
1E25h	R	(d081) Fault monitor 1	-
1F31h	R/W	(F001) Output frequency setting/monitor	0.0 / Start frequency to 655.35 [Hz]
1F32h	R/W	(F002) Acceleration time 1	0.00 to 655.35 [sec]
1F33h	R/W	(F003) Deceleration time 1	0.00 to 655.35 [sec]
1F34h	R/W	(A020) Multi-step speed reference 0	0.00 / Start frequency to 655.35 [Hz]
1F35h	R/W	(A021) Multi-step speed reference 1	0.00 / Start frequency to 655.35 [Hz]
1F36h	R/W	(A022) Multi-step speed reference 2	0.00 / Start frequency to 655.35 [Hz]
1F37h	R/W	(A023) Multi-step speed reference 3	0.00 / Start frequency to 655.35 [Hz]
1F38h	R/W	(A061) Frequency upper limit	0.00 / Frequency lower limit to 655.35 [Hz]
1F39h	R/W	(A062) Frequency lower limit	0.00 / Start frequency to 655.35 [Hz]
1F3Ah	R/W	(A069) Acceleration stop frequency	0.00 to 655.35 [Hz]
1F3Bh	R/W	(A145) Frequency addition amount	0.00 to 655.35 [Hz]
1F3Ch	R/W	(A154) Deceleration hold frequency	0.00 to 655.35 [Hz]
1F3Dh	R/W	(A156) PID sleep function action threshold	0.00 to 655.35 [Hz]
1F3Eh	R/W	(b007) Frequency matching lower limit frequency setting	0.00 to 655.35 [Hz]

B-5-1-2-4 P211-P220 (Modbus register format 1 to 10): Format of external register

Func. Code	Name	Settings	EU
P211 to P220	Modbus register format 1 to 10	00: Unsigned 01: Signed	00

This parameters could be used to adjust the user register data.

When data is written into the inverter, the sign information from P211 to P220 is used to convert data according to MX2.

Example: External register = “signed” (sign-having), Internal register = “unsigned” (sign-less)

After minus data is converted into the absolute value, data writing is carried out after an upper and lower limit check.

In MX2, since the data is sign-less data, it is read as sign-less data.

Example: External register = “signed” (sign-having), Internal register = “signed” (sign-having)

After an upper lower limit check, data writes minus data as it is.

The sign having data is read.

B-5-1-2-5 P221-P230 (Modbus register scaling 1 to 10): Scaling data

Func. Code	Name	Settings	EU
P221 to P230	Modbus register scaling 1 to 10	0.001 to 65.535	1.000

Scale the data when reading or writing an external register to an internal one.

A calculation result is restricted to the following range:

Signed: -32768 to 32767

Unsigned: 0 to 65535

B-5-1-3 Error code

These new error codes has been added:

No.	Code	Explanation
1	31h	Modbus mapping missmatch
2	32h	Access to a duplication register

No.	Internal register	External register	Result
1	0000h (Initial value)	0001h to FFFFh	Error
2	0001h to FFFFh	0000h (Initial value)	Error
3	0001h to FFFFh	0001h to FFFFh	Normal

B-5-1-3-1 Register allocation combination checks

When two or more internal registers in which values differ are in the same external register, both are considered incorrect.

In the same way two or more internal registers couldn't be allocated to one external register.

B-5-1-3-2 Overlapped external register

When an external register and retry a existing register overlap, access to the register is not available.

Moreover, when the overlapping existing register is a double word parameter, access of the register used as a pair is also forbidden.

Example:

External register = 1216 (overlaps with higher rank of existing register: 1216h = A020.)

Internal register = 1201h (existing register: 1201h = A001)

Address 1216h will be associated with two parameters, A020 and A001, As this is not possible only the modbus mapping setting is used and it means that neither lower or higher rank of A020 could be accessed.

B-5-1-3-3 Internal register setup

Is not possible to use a double word or a none existing register as internal register.

B-5-1-4 Examples

B-5-1-4-1 When an external register doesn't overlap with an existing register

P201 = External register: 4001h
P301 = Internal register: 120Fh (A013)
P221 = Scaling: 1.000
P211 = Format: Unsigned
A013 value: 33 (21h)

(1) Read (0x03) / Object register: External register (4001h) Modbus command use register number -1
Transmission: 01 03 **40 00** 00 01 91 CA
Reception: 01 03 02 **00 21** 78 5C

(2) Read (0x03) / Object register: Internal register (120Fh)
Transmission: 01 03 **12 0E** 00 01 E0 B1
Reception: 01 03 02 **00 21** 78 5C

(3) Write (0x06) / Object register: External register (4001h)
Transmission: 01 06 **40 00 00 30** 9C 1E
Reception: 01 06 **40 00 00 30** 9C 1E

(4) Read (0x03) / Object register: Internal register (120Fh)
Transmission: 01 03 **12 0E** 00 01 E0 B1
Reception: 01 03 02 **00 30** B8 50

B-5-1-4-2 When external register overlaps with existing register (1 word)

1. P201 = External register: 1201h (A001)
   P301 = Internal register: 1210h (A014)
   P221 = Scaling: 1.000
   P211 = Format: Unsigned

2. P202 = External register: 5001h
   P302 = Internal register: 1201h (A001)
   P222 = Scaling: 1.000
   P212 = Format: Unsigned

A014 value: 100 (64h)
A001 value: 1 (01h)

(1) Read (0x03) / Object register: External register 1 (1201h)
Transmission: 01 03 **12 00** 00 01 81 72
Reception: 01 03 02 **00 64** B9 AF

(2) Read (0x03) / Object register: Internal register 1 (1210h)
Transmission: 01 03 **12 0F** 00 01 B1 71
Reception: 01 03 02 **00 64** B9 AF

(3) Write (0x06) / Object register: External register 1 (1201h)
Transmission: 01 06 **12 00 00 50** 8C 8E
Reception: 01 06 **12 00 00 50** 8C 8E

(4) Read (0x03) / Object register: Internal register 1 (1210h)
Transmission: 01 03 **12 0F** 00 01 B1 71
Reception: 01 03 02 **00 50** B8 78

(5) Read (0x03) / Object register: External register 2 (5001h)
Transmission: 01 03 **50 00** 00 01 95 0A
Reception: 01 03 02 **00 01** 79 84

B-5-1-4-3 When external register overlaps with existing register (2-word higher rank)

P201 = External register: 1218h (A021 (HIGH))
P301 = Internal register: 120Fh (A013)
P221 = Scaling: 1.000
P211 = Format: Unsigned
A013 value: 33 (21h)

(1) Read (0x03) / Object register: External register (1218h)
Transmission: 01 03 **12 17** 00 01 31 76
Reception: 01 03 02 **00 21** 78 5C

(2) Read (0x03) / Object register: Internal register (120Fh)
Transmission: 01 03 **12 0E** 00 01 E0 B1
Reception: 01 03 02 **00 21** 78 5C

(3) Read (0x03) / Object register: 1219h (A021 (LOW))
Transmission: 01 03 **12 18** 00 01 01 75
Reception: 01 83 **32** C0 E5 (Error 32h: access to duplication register)

(4) Write (0x10) / Object register: 1219h (A021 (LOW))
Transmission: 01 10 **12 18** 00 02 04 00 00 10 00 2A 65
Reception: 01 90 **32** CD D5 (Error 32h: access to duplication register)

B-5-1-4-4 When an external register overlaps with the existing register (2-word low rank)

P201 = External register: 1217h (A020 (LOW))
P301 = Internal register: 120Fh (A013)
P221 = Scaling: 1.000
P211 = Format: Unsigned
A013 value: 33 (21h)

(1) Read (0x03) / Object register: External register (1217h)
Transmission: 01 03 **12 16** 00 01 60 B6
Reception: 01 03 02 **00 21** 78 5C

(2) Read (0x03) / Object register: Internal register (120Fh)
Transmission: 01 03 **12 0E** 00 01 E0 B1
Reception: 01 03 02 **00 21** 78 5C

(3) Read (0x03) / Object register: 1216h (A020 (HIGH))
Transmission: 01 03 **12 15** 00 01 90 B6
Reception: 01 83 **32** C0 E5 (Error 32h: access to duplication register)

(4) Write (0x10) / Object register: 1216h (A020 (HIGH))
Transmission: 01 10 **12 15** 00 02 04 **00 00 10 00** EB FC
Reception: 01 90 **32** CD D5 (Error 32h: access to duplication register)

B-5-1-4-5 When internal register is not correct

1. P201 = External register: 6001h
   P301 = Internal register: 0000h
   P221 = Scaling: 1.000
   P211 = Format: Unsigned

2. P202 = External register: 6002h
   P302 = Internal register: 1216h (A020 (HIGH))
   P222 = Scaling: 1.000
   P212 = Format: Unsigned

3. P203 = External register: 6003h
   P303 = Internal register: 1217h (A020 (LOW))
   P223 = Scaling: 1.000
   P213 = Format: Unsigned

4. P204 = External register: 6004h
   P304 = Internal register: 12FFh
   P224 = Scaling: 1.000
   P214 = Format: Unsigned

(1) Read (0x03) / Object register: External register 1 (6001h)
Transmission: 01 03 **60 00** 00 01 9A 0A
Reception: 01 83 **31** 80 E4 (Error 31h: modbus mapping missmatch)

(2) Read (0x03) / Object register: External register 2 (6002h)
Transmission: 01 03 **60 01** 00 01 CB CA
Reception: 01 83 **31** 80 E4 (Error 31h: modbus mapping missmatch)

(3) Read (0x03) / Object register: External register 3 (6003h)
Transmission: 01 03 **60 02** 00 01 3B CA
Reception: 01 83 **31** 80 E4 (Error 31h: modbus mapping missmatch)

(4) Read (0x03) / Object register: External register 4 (6004h)
Transmission: 01 03 **60 03** 00 01 6A 0A
Reception: 01 83 **31** 80 E4 (Error 31h: modbus mapping missmatch)

B-5-1-4-6 When external register is not correct

1. P201 = External register: 6001h
   P301 = Internal register: 120Fh (A013)
   P221 = Scaling: 1.000
   P211 = Format: Unsigned

2. P202 = External register: 6001h
   P302 = Internal register: 1210h (A014)
   P222 = Scaling: 1.000
   P212 = Format: Unsigned

(1) Read (0x03) / Object register: External register (6001h)
Transmission: 01 03 **60 00** 00 01 9A 0A
Reception: 01 83 **31** 80 E4 (Error 31h: modbus mapping missmatch)

B-5-2 Big/Little endian setup

B-5-2-1 Functional outline

It allows to change the message structure of the Modbus, USB and Option communication.

B-5-2-2 Setting parameter

P400 (Big endian / Little endian selection)

Func. Code	Name	Settings	EU
P400	Big/Little endian selection	00: Big endian 01: Little endian 02: Special endian	00

Example:

Word Data = 0x0102, Double Word Data = 0x01020304

Word Data / Endian of Word Data:

No.	Big endian	Little endian	Special endian
1	01	02	01
2	02	01	02

Double Word Data / Endian of Double Word Data

No.	Big endian	Little endian	Special endian
1	01	04	03
2	02	03	04
3	03	02	01
4	04	01	02

Note The software tool will not operate if modified.

B-5-2-3 Coverage of endian

Endian is applied only to the register data.

It is not applied to the coil and the register number, etc.

B-5-2-4 Parameter enable

P400: Changes on this parameter becomes effective at power ON or after a reset.

B-5-2-5 Communication command that can be used by this function

The list of the communication that can use this function are shown below.

Modbus communication command (RS485, USB)

No.	Modbus function code	Function name
1	03h	Read Holding Register
2	06h	Write Single Register
3	10h	Write Multiple Registers
4	17h	Read/Write Multiple Registers

B-5-2-6 Examples

B-5-2-6-1 Big endian

A013 = Register number: 120Fh
Value: 33 (21h)
F002 = Register number: 1103h
Value: 360000 (57E40h)

(1) Read (0x03) / Object register: 120Fh (A013)
Transmission: 01 03 **12 0E** 00 01 E0 B1
Reception: 01 03 02 **00 21** 78 5C

(2) Read (0x03) / Object register: 1103h (F002)
Transmission: 01 03 **11 02** 00 02 60 F7
Reception: 01 03 04 **00 05 7E 40** CA 62

(3) Write (0x06) / Object register: 120Fh (A013) / Write data: 100 (64h)
Transmission: 01 06 **12 0E 00 64** EC 9A
Reception: 01 06 **12 0E 00 64** EC 9A

(4) Write (0x10) / Object register: 1103h (F002) / Write data: 74565 (12345h)
Transmission: 01 10 **11 02** 00 02 04 **00 01 23 45** 3B 25
Reception: 01 10 **11 02** 00 02 E5 34

B-5-2-6-2 Little endian

A013 = Register number: 120Fh
Value: 33 (21h)
F002 = Register number: 1103h
Value: 360000 (57E40h)

(1) Read (0x03) / Object register: 120Fh (A013)
Transmission: 01 03 **12 0E** 00 01 E0 B1
Reception: 01 03 02 **21 00** A0 14

(2) Read (0x03) / Object register: 1103h (F002)
Transmission: 01 03 **11 02** 00 02 60 F7
Reception: 01 03 04 **40 7E 05 00** 8C BB

(3) Write (0x06) / Object register: 120Fh (A013) / Write data: 100 (64h)
Transmission: 01 06 **12 0E 64 00** C7 B1
Reception: 01 06 **12 0E 64 00** C7 B1

(4) Write (0x10) / Object register: 1103h (F002) / Write data: 74565 (12345h)
Transmission: 01 10 **11 02** 00 02 04 **45 23 01 00** 57 70
Reception: 01 10 **11 02** 00 02 E5 34

B-5-2-6-3 Special endian

A013 = Register number: 120Fh
Value: 33 (21h)
F002 = Register number: 1103h
Value: 360000 (57E40h)

(1) Read (0x03) / Object register: 120Fh (A013)
Transmission: 01 03 **12 0E** 00 01 E0 B1
Reception: 01 03 02 **00 21** 78 5C

(2) Read (0x03) / Object register: 1103h (F002)
Transmission: 01 03 **11 02** 00 02 60 F7
Reception: 01 03 04 **7E 40 00 05** 23 CC

(3) Write (0x06) / Object register: 120Fh (A013) / Write data: 100 (64h)
Transmission: 01 06 **12 0E 00 64** EC 9A
Reception: 01 06 **12 0E 00 64** EC 9A

(4) Write (0x10) / Object register: 1103h (F002) / Write data: 74565 (12345h)
Transmission: 01 10 **11 02** 00 02 04 **23 45 00 01** 69 B7
Reception: 01 10 **11 02** 00 02 E5 34

Appendix C
Drive Parameter Setting Tables

C-1 Introduction

This appendix lists the user-programmable parameters for the MX2 series inverters and the default values for European and U.S. product types. The right-most column of the tables is blank, so you can record values you have changed from the default. This involves just a few parameters for most applications. This appendix presents the parameters in a format oriented toward the keypad on the inverter.

C-2 Parameter Settings for Keypad Entry

MX2 series inverters provide many functions and parameters that can be configured by the user. We recommend that you record all parameters that have been edited, in order to help in troubleshooting or recovery from a loss of parameter data.

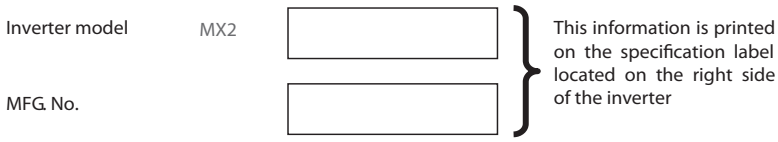

C-2-1 Main Profile Parameters

Note Mark "✓" in b031=10 shows the accessible parameters when b031 is set "10", high level access.

"F" Group Parameters		Default Setting	b031=10	User Setting
Func. Code	Name	(EU)		
F001	Output frequency setting/monitor	0.00	✓	
F002	Acceleration time 1	10.00	✓	
F202	2nd Acceleration time 1	10.00	✓	
F003	Deceleration time 1	10.00	✓	
F203	2nd Deceleration time 1	10.00	✓	
F004	Operator rotation direction selection	00	×	

C-2-2 Standard Functions

Note Mark "✓" in b031=10 shows the accessible parameters when b031 is set "10", high level access.

"A" Group Parameters		Default Setting	b031=10	User Setting
Func. Code	Name	(EU)		
A001	Frequency reference selection	01	×	
A201	Frequency reference selection, 2nd motor	01	×	
A002	Run command selection	01	×	
A202	Run command selection, 2nd motor	01	×	
A003	Base frequency	50.0	×	
A203	2nd set base frequency	50.0	×	
A004	Maximum frequency	50.0	×	
A204	2nd maximum frequency	50.0	×	
A005	O/OI selection	00	×	
A011	O start frequency	0.00	×	
A012	O end frequency	0.00	×	
A013	O start ratio	0	×	
A014	O end ratio	100	×	
A015	O start selection	01	×	
A016	O, O2, OI sampling	8	×	
A017	Drive Programming (EzSQ) Selection	00	×	
A019	Multi-step speed selection	00	×	
A020	Multi-step speed reference 0	6.00	✓	
A220	2nd multi-step speed reference 0	6.00	✓	
A021	Multi-step speed reference 1	0.00	✓	
A022	Multi-step speed reference 2	0.00	✓	
A023	Multi-step speed reference 3	0.00	✓	
A024	Multi-step speed reference 4	0.00	✓	
A025	Multi-step speed reference 5	0.00	✓	
A026	Multi-step speed reference 6	0.00	✓	
A027	Multi-step speed reference 7	0.00	✓	
A028	Multi-step speed reference 8	0.00	✓	
A029	Multi-step speed reference 9	0.00	✓	
A030	Multi-step speed reference 10	0.00	✓	
A031	Multi-step speed reference 11	0.00	✓	
A032	Multi-step speed reference 12	0.00	✓	
A033	Multi-step speed reference 13	0.00	✓	
A034	Multi-step speed reference 14	0.00	✓	
A035	Multi-step speed reference 15	0.00	✓	
A038	Jogging frequency	6.00	✓	
A039	Jogging stop selection	04	×	
A041	Torque boost selection	00	×	
A241	2nd torque boost selection	00	×	
A042	Manual torque boost voltage	1.0	✓	
A242	2nd manual torque boost voltage	1.0	✓	
A043	Manual torque boost frequency	5.0	✓	
A243	2nd manual torque boost frequency	5.0	✓	
A044	V/f characteristics selection	00	×	
A244	2nd V/f characteristics selection	00	×	

"A" Group Parameters		Default Setting	b031=10	User Setting
Func. Code	**Name**	**(EU)**		
A045	Output voltage gain	100	✓	
A245	Output voltage gain, 2nd motor	100	✓	
A046	Automatic torque boost voltage compensation gain	100	✓	
A246	2nd automatic torque boost voltage compensation gain	100	✓	
A047	Automatic torque boost slip compensation gain	100	✓	
A247	2nd automatic torque boost slip compensation gain	100	✓	
A051	DC injection braking selection	01	×	
A052	DC injection braking frequency	0.50	×	
A053	DC injection braking delay time	0.0	×	
A054	DC injection braking power	50 40	×	
A055	DC injection braking time	0.5	×	
A056	DC injection braking method selection	01	×	
A057	Startup DC injection braking power	0	×	
A058	Startup DC injection braking time	0.0	×	
A059	DC injection braking carrier frequency	5.0	×	
A061	Frequency upper limit	0.00	×	
A261	2nd frequency upper limit	0.00	×	
A062	Frequency lower limit	0.00	×	
A262	2nd frequency lower limit	0.00	×	
A063, A065, A067	Jump frequency 1 to 3	0.00	×	
A064, A066, A068	Jump frequency width 1 to 3	0.50	×	
A069	Acceleration stop frequency	0.00	×	
A070	Acceleration stop time	0.0	×	
A071	PID selection	00	×	
A072	PID P gain	1.0	✓	
A073	PID I gain	1.0	✓	
A074	PID D gain	0.00	✓	
A075	PID scale	1.00	×	
A076	PID feedback selection	00	×	
A077	Reverse PID function	00	×	
A078	PID output limit function	0.0	×	
A079	PID feedforward selection	00	×	
A081	AVR selection	02	×	
A281	AVR selection, 2nd motor	02	×	
A082	AVR voltage selection	230/400	×	
A282	AVR voltage selection, 2nd motor	230/400	×	
A083	AVR filter time constant	0.300	×	
A084	AVR deceleration gain	100	×	
A085	Energy-saving operation mode	00	×	
A086	Energy-saving response/accuracy adjustment	50.0	✓	

"A" Group Parameters		Default Setting	b031=10	User Setting
Func. Code	**Name**	**(EU)**		
A092	Acceleration time 2	10.00	✓	
A292	2nd acceleration time 2	10.00	✓	
A093	Deceleration time 2	10.00	✓	
A293	2nd deceleration time 2	10.00	✓	
A094	Select method to switch to Acc2/ Dec2 profile	00	×	
A294	Select method to switch to Acc2/ Dec2 profile, 2nd motor	00	×	
A095	Acc1 to Acc2 frequency transition point	0.00	×	
A295	Acc1 to Acc2 frequency transition point, 2nd motor	0.00	×	
A096	Dec1 to Dec2 frequency transition point	0.00	×	
A296	Dec1 to Dec2 frequency transition point, 2nd motor	0.00	×	
A097	Acceleration curve selection	01	×	
A098	Deceleration curve selection	01	×	
A101	OI input active range start frequency	0.00	×	
A102	OI input active range end frequency	0.00	×	
A103	OI input active range start ratio	20	×	
A104	OI input active range end ratio	100	×	
A105	OI input start frequency enable	00	×	
A131	Acceleration curve parameter	02	×	
A132	Deceleration curve parameter	02	×	
A141	Operation frequency input A setting	02	×	
A142	Operation frequency input B setting	03	×	
A143	Operator selection	00	×	
A145	Frequency addition amount	0.00	×	
A146	Frequency addition direction	00	×	
A150	EL-S-curve ratio 1 during acceleration	10	×	
A151	EL-S-curve ratio 2 during acceleration	10	×	
A152	EL-S-curve ratio 1 during deceleration	10	×	
A153	EL-S-curve ratio 2 during deceleration	10	×	
A154	Deceleration hold frequency	0.00	×	
A155	Deceleration hold time	0.0	×	
A156	PID sleep function action threshold	0.00	×	
A157	PID sleep function action delay time	0.0	×	
A161	[VR] input active range start frequency	0.00	×	
A162	[VR] input active range end frequency	0.00	×	
A163	[VR] input active range start current	0	×	
A164	[VR] input active range end voltage	100	×	
A165	[VR] input start frequency enable	01	×	

C-2-3 Fine Tuning Functions

"B" Group Parameters		Default Setting	b031=10	User Setting
Func. Code	Name	(EU)		
b001	Retry selection	00	×	
b002	Allowable momentary power interruption time	1.0	×	
b003	Retry wait time	1.0	×	
b004	Momentary power interruption/ undervoltage trip during stop selection	00	×	
b005	Momentary power interruption retry time selection	00	×	
b007	Frequency matching lower limit frequency setting	0.00	×	
b008	Trip retry selection	00	×	
b010	Overvoltage/overcurrent retry time selection	3	×	
b011	Trip retry wait time	1.0	×	
b012 b212	Electronic thermal level 2nd electronic thermal level	Rated current Rated current	× ×	
b013	Electronic thermal characteristics selection	00	×	
b213	2nd electronic thermal characteristics selection	00	×	
b015	Free setting, electronic thermal frequency 1	0	×	
b016	Free setting, electronic thermal current 1	0.00	×	
b017	Free setting, electronic thermal frequency 2	0	×	
b018	Free setting, electronic thermal current 2	0.00	×	
b019	Free setting, electronic thermal frequency 3	0	×	
b020	Free setting, electronic thermal current 3	0.00	×	
b021 b221	Overload limit selection Overload limit selection, 2nd motor	01 01	× ×	
b022 b222	Overload limit level Overload limit level, 2nd motor	Rated current x 1.5 (HD) 1.2 (ND) Rated current x 1.5 (HD) 1.2 (ND)	× ×	
b023 b223	Overload limit parameter Overload limit parameter, 2nd motor	1.0 1.0	× ×	
b024	Overload limit selection	01	×	
b025	Overload limit level 2	1.50 x Rated current	×	
b026	Overload limit parameter 2	1.00	×	
b027	Overcurrent suppression function	00	×	
b028	Active Frequency Matching restart level	Rated current	×	
b029	Active Frequency Matching restart parameter	0.50	×	
b030	Starting frequency at Active Frequency Matching restart	00	×	

"B" Group Parameters		Default Setting	b031=10	User Setting
Func. Code	**Name**	**(EU)**		
b031	Soft lock selection	01	×	
b033	Motor cable length parameter	10	✓	
b034	RUN time/Power ON time setting	0	×	
b035	Rotation direction limit selection	00	×	
b036	Reduced voltage startup selection	2	×	
b037	Display selection	00	×	
b038	Initial screen selection	001	×	
b039	User parameter automatic setting function selection	00	×	
b040	Torque limit selection	00	×	
b041	Torque limit 1 (Four-quadrant mode forward power running)	200	×	
b042	Torque limit 2 (Four-quadrant mode reverse regeneration)	200	×	
b043	Torque limit 3 (Four-quadrant mode reverse power running)	200	×	
b044	Torque limit 4 (Four-quadrant mode forward regeneration)	200	×	
b045	Torque LADSTOP selection	00	×	
b046	Reverse rotation prevention selection	00	×	
b049	Dual rate selection	00	×	
b050	Selection of non-stop function at momentary power interruption	00	×	
b051	Starting voltage of non-stop function at momentary power interruption	220/440	×	
b052	Stop deceleration level of non-stop function at momentary power interruption	360/720	×	
b053	Deceleration time of non-stop function at momentary power interruption	1.00	×	
b054	Deceleration starting width of non-stop function at momentary power interruption	0.00	×	
b060	Window comparator O upper limit level	100	✓	
b061	Window comparator O lower limit level	0	✓	
b062	Window comparator O hysteresis width	0	✓	
b063	Window comparator OI upper limit level	100	✓	
b064	Window comparator OI lower limit level	0	✓	
b065	Window comparator OI hysteresis width	0	✓	
b070	Analog operation level at O disconnection	no	×	
b071	Analog operation level at OI disconnection	no	×	
b075	Ambient temperature	40	×	
b078	Integrated power clear	00	✓	
b079	Integrated power display gain	1	×	
b082	Starting frequency	0.50	×	

"B" Group Parameters		Default Setting	b031=10	User Setting
Func. Code	**Name**	**(EU)**		
b083	Carrier frequency	10.0	×	
b084	Initialization selection	00	×	
b085	Initialization parameter selection	01	×	
b086	Frequency conversion coefficient	1.00	✓	
b087	STOP key selection	00	×	
b088	Free-run stop selection	00	×	
b089	Automatic carrier reduction	01	×	
b090	Usage rate of regenerative bracking function	0.0	×	
b091	Stop selection	00	×	
b092	Cooling fan control	01	×	
b093	Clear elapsed time of cooling fan	00	×	
b094	Initialization target data	00	×	
b095	Regenerative braking function operation selection	00	×	
b096	Regenerative braking function ON level	360/720	×	
b097	BRD resistor	100.0	×	
b100	Free V/f frequency 1	0	×	
b101	Free V/f voltage 1	0.0	×	
b102	Free V/f frequency 2	0	×	
b103	Free V/f voltage 2	0.0	×	
b104	Free V/f frequency 3	0	×	
b105	Free V/f voltage 3	0.0	×	
b106	Free V/f frequency 4	0	×	
b107	Free V/f voltage 4	0.0	×	
b108	Free V/f frequency 5	0	×	
b109	Free V/f voltage 5	0.0	×	
b110	Free V/f frequency 6	0	×	
b111	Free V/f voltage 6	0.0	×	
b112	Free V/f frequency 7	0	×	
b113	Free V/f voltage 7	0.0	×	
b120	Brake control selection	00	×	
b121	Brake wait time for release	0.00	×	
b122	Brake wait time for acceleration	0.00	×	
b123	Brake wait time for stopping	0.00	×	
b124	Brake wait time for confirmation	0.00	×	
b125	Brake release frequency	0.00	×	
b126	Brake release current	Rated current	×	
b127	Braking input frequency	0.00	×	
b130	Overvoltage protection function selection during deceleration	01	×	
b131	Overvoltage protection level during deceleration	380 / 760	×	
b132	Overvoltage protection parameter	1.00	×	
b133	Overvoltage protection proportional gain setting	0.20	✓	
b134	Overvoltage protection integral time setting	1.0	✓	
b145	GS input mode	00	×	
b150	Display ex.operator connected	001	✓	

"B" Group Parameters		Default Setting	b031=10	User Setting
Func. Code	**Name**	**(EU)**		
b160	1st parameter of Dual Monitor	001	✓	
b161	2nd parameter of Dual Monitor	002	✓	
b163	Freq. set in monitoring	00	✓	
b164	Auto return initial display	00	×	
b165	Ex. Operator com. Loss action	02	✓	
b166	Data Read/Write selection	00	×	
b171	Inverter mode selection	00	×	
b180	Initialize trigger	00	×	
b190	Password A setting	0000	×	
b191	Password A for authentication	****	×	
b192	Password B setting	0000	×	
b193	Password B for authentication	****	×	
b910	E. thermal Dec Mode	00	×	
b911	E. thermal Dec Time	600.00	×	
b912	E. thermal Dec TimeCnst	120.00	×	
b913	E. thermal AccmGain	100.0	×	

C-2-4 Intelligent Terminal Functions

"C" Group Parameters		Default Setting	b031=10	User Setting
Func. Code	Name	(EU)		
C001	Multi-function input 1 selection	00	×	
C002	Multi-function input 2 selection	01	×	
C003	Multi-function input 3 selection	12	×	
C004	Multi-function input 4 selection	18	×	
C005	Multi-function input 5 selection	02	×	
C006	Multi-function input 6 selection	03	×	
C007	Multi-function input 7 selection	06	×	
C011	Multi-function input 1 operation selection	00	×	
C012	Multi-function input 2 operation selection	00	×	
C013	Multi-function input 3 operation selection	00	×	
C014	Multi-function input 4 operation selection	00	×	
C015	Multi-function input 5 operation selection	00	×	
C016	Multi-function input 6 operation selection	00	×	
C017	Multi-function input 7 operation selection	00	×	
C021	Multi-function output terminal 11 selection	00	×	
C022	Multi-function output terminal 12 selection	01	×	
C026	Relay output (AL2, AL1) function selection	05	×	
C027	[EO] terminal selection	07	×	
C028	AM selection	00	×	
C030	Digital current monitor reference value	Rated current	✓	
C031	Multi-function output terminal 11 contact selection	00	×	
C032	Multi-function output terminal 12 contact selection	00	×	
C036	Relay output (AL2, AL1) contact selection	01	×	
C038	Light load signal output mode	01	×	
C039	Light load detection level	Rated current	×	
C040	Overload warning signal output mode	01	×	
C041	Overload warning level	Rated current	×	
C241	Overload warning level, 2nd motor	Rated current	×	
C042	Arrival frequency during acceleration	0.00	×	
C043	Arrival frequency during deceleration	0.00	×	
C044	PID deviation excessive level	3	×	
C045	Arrival frequency during acceleration 2	0.00	×	
C046	Arrival frequency during deceleration 2	0.00	×	

"C" Group Parameters		Default Setting	b031=10	User Setting
Func. Code	**Name**	**(EU)**		
C047	Pulse train input scale conversion for EO output	1.00	✓	
C052	PID FB upper limit	100	×	
C053	PID FB lower limit	0	×	
C054	Over-torque/under-torque selection	00	×	
C055	Overtorque level (Forward power running)	100	×	
C056	Overtorque level (Reverse regeneration)	100	×	
C057	Overtorque level (Reverse power running)	100	×	
C058	Overtorque level (Forward regeneration)	100	×	
C059	Signal output mode of Over/under torque	01	×	
C061	Thermal warning level	90	×	
C063	0 Hz detection level	0.00	×	
C064	Fin overheat warning level	100	×	
C071	Communication speed selection (Baud rate selection)	05	×	
C072	Communication station No. Selection	1	×	
C074	Communication parity selection	00	×	
C075	Communication stop bit selection	01	×	
C076	Communication error selection	02	×	
C077	Communication error timeout	0.00	×	
C078	Communication wait time	0	×	
C081	O adjustment	100.0	✓	
C082	OI adjustment	100.0	✓	
C085	Thermistor adjustment	100.0	✓	
C091	Debug mode selection	00	×	
C096	Communication selection	00	×	
C098	EzCOM start adr. Of master	1	×	
C099	EzCOM end adr. Of master	1	×	
C100	EzCOM starting trigger	00	×	
C101	UP/DWN selection	00	×	
C102	Reset selection	00	×	
C103	Reset frequency matching selection	00	×	
C104	UP/DWN clear mode	00	×	
C105	EO gain setting	100	✓	
C106	AM gain setting	100	✓	
C109	AM bias setting	0	✓	
C111	Overload warning level 2	Rated current	×	
C130	Output 11 ON delay	0.0	×	
C131	Output 11 OFF delay	0.0	×	
C132	Output 12 ON delay	0.0	×	
C133	Output 12 OFF delay	0.0	×	
C140	Relay output ON delay	0.0	×	
C141	Relay output OFF delay	0.0	×	
C142	Logic output signal 1 selection 1	00	×	
C143	Logic output signal 1 selection 2	00	×	

"C" Group Parameters		Default Setting	b031=10	User Setting
Func. Code	**Name**	**(EU)**		
C144	Logic output signal 1 operator selection	00	×	
C145	Logic output signal 2 selection 1	00	×	
C146	Logic output signal 2 selection 2	00	×	
C147	Logic output signal 2 operator selection	00	×	
C148	Logic output signal 3 selection 1	00	×	
C149	Logic output signal 3 selection 2	00	×	
C150	Logic output signal 3 operator selection	00	×	
C160	Input terminal response time 1	1	×	
C161	Input terminal response time 2	1	×	
C162	Input terminal response time 3	1	×	
C163	Input terminal response time 4	1	×	
C164	Input terminal response time 5	1	×	
C165	Input terminal response time 6	1	×	
C166	Input terminal response time 7	1	×	
C169	Multi-step speed/position determination time	0	×	

C-2-5 Motor Constants Functions

"H" Group Parameters		Default Setting	b031=10	User Setting
Func. Code	**Name**	**(EU)**		
H001	Auto-tuning selection	00	×	
H002	Motor parameter selection	00	×	
H202	2nd motor parameter selection	00	×	
H003	Motor capacity selection	Specified by the capacity of each inverter model	×	
H203	2nd motor capacity selection		×	
H004	Motor pole number selection	4	×	
H204	2nd motor pole number selection	4	×	
H005	Speed response	100	✓	
H005	2nd speed response	100	✓	
H006	Stabilization parameter	100	✓	
H206	2nd stabilization parameter	100	✓	
H020	Motor parameter R1	Depends on the motor capacity	×	
H220	2nd motor parameter R1		×	
H021	Motor parameter R2	Depends on the motor capacity	×	
H221	2nd motor parameter R2		×	
H022	Motor parameter L	Depends on the motor capacity	×	
H222	2nd motor parameter L		×	
H023	Motor parameter Io	Depends on the motor capacity	×	
H223	2nd motor parameter Io		×	
H024	Motor parameter J	Depends on the motor capacity	×	
H224	2nd motor parameter J		×	
H030	Motor parameter R1 (auto-tuning data)	Depends on the motor capacity	×	
H230	2nd motor parameter R1 (auto-tuning data)		×	

"H" Group Parameters		Default Setting	b031=10	User Setting
Func. Code	**Name**	**(EU)**		
H031	Motor parameter R2 (auto-tuning data)	Depends on the motor capacity	×	
H231	2nd motor parameter R2 (auto-tuning data)		×	
H032	Motor parameter L (auto-tuning data)	Depends on the motor capacity	×	
H232	2nd motor parameter L (auto-tuning data)		×	
H033	Motor parameter Io (auto-tuning data)	Depends on the motor capacity	×	
H233	2nd motor parameter Io (auto-tuning data)		×	
H034	Motor parameter J (auto-tuning data)	Depends on the motor capacity	×	
H234	2nd motor parameter J (auto-tuning data)		×	
H050	Slip compensation P gain for V/f control with FB	0.20	✓	
H051	Slip compensation I gain for V/f control with FB	2	✓	
H102	PM motor code selection	00	×	
H103	PM motor capacity	kW dependent	×	
H104	PM motor pole number selection	4	×	
H105	PM rated current	Rated current	×	
H106	PM parameter R	kW dependent	×	
H107	PM parameter Ld	kW dependent	×	
H108	PM parameter Lq	kW dependent	×	
H109	PM parameter Ke	kW dependent	×	
H110	PM parameter J	kW dependent	×	
H111	PM parameter R (auto-tuning data)	kW dependent	×	
H112	PM parameter Ld (auto-tuning data)	kW dependent	×	
H113	PM parameter Lq (auto-tuning data)	kW dependent	×	
H116	PM speed response	100	✓	
H117	PM starting current	70.00	✓	
H118	PM starting time	1.00	✓	
H119	PM stabilization constant	100	✓	
H121	PM minimum frequency	8.0	✓	
H122	PM No-Load current	10.00	✓	
H123	PM starting method	00	×	
H131	PM IMPE 0V wait	10	×	
H132	PM IMPE detect wait	10	×	
H133	PM IMPE detect	30	×	
H134	PM IMPE voltage gain	100	×	

C-2-6 Expansion Card Functions

"P" parameters will be appeared when the expansion option is connected.

"P" Group Parameters		Default Setting	b031=10	User Setting
Func. Code	Name	(EU)		
P001	Operation selection at option 1 error	00	×	
P003	EA terminal selection	00	×	
P004	Pulse train input mode for feedback	00	×	
P011	Encoder pulses	512	×	
P012	Simple positioning selection	00	×	
P014	Creep pulse ratio	125.0	×	
P015	Creep speed	5.00	×	
P017	Positioning range	50	×	
P026	Overspeed error detection level	115.0	×	
P027	Speed deviation error detection level	10.00	×	
P031	Acceleration/deceleration time input type	00	×	
P033	Torque reference input selection	00	×	
P034	Torque reference setting	0	✓	
P036	Torque bias mode	00	×	
P037	Torque bias value	0	✓	
P038	Torque bias polarity selection	00	×	
P039	Speed limit value in torque control (forward)	0.00	✓	
P040	Speed limit value in torque control (reverse)	0.00	✓	
P041	Speed / torque control switching time	0	✓	
P044	Network comm. Watchdog timer	1.00	×	
P045	Operation setting at communica-tions error	00	×	
P046	Instance number	1	×	
P048	Operation setting at idle mode detection	00	×	
P049	Polarity setting for rotation speed	0	×	
P055	Pulse train frequency scale	1.5	×	
P056	Pulse train frequency filter time constant	0.10	×	
P057	Pulse train frequency bias amount	0	×	
P058	Pulse train frequency limit	100	×	
P059	Pulse input lower cut	1.00	×	
P060	Multi-step position command 0	0	✓	
P061	Multi-step position command 1	0	✓	
P062	Multi-step position command 2	0	✓	
P063	Multi-step position command 3	0	✓	
P064	Multi-step position command 4	0	✓	
P065	Multi-step position command 5	0	✓	
P066	Multi-step position command 6	0	✓	
P067	Multi-step position command 7	0	✓	
P068	Zero return mode	00	✓	
P069	Zero return direction selection	00	✓	
P070	Low-speed zero return frequency	5.00	✓	
P071	High-speed zero return frequency	5.00	✓	

"P" Group Parameters		Default Setting	b031=10	User Setting
Func. Code	**Name**	**(EU)**		
P072	Position range specification (forward)	268435455	✓	
P073	Position range specification (reverse)	-268435455	✓	
P075	Positioning mode	00	✓	
P077	Encoder disconnection timeout	1.0	✓	
P080	Position restarting range	0	×	
P081	Save position at power off	00	×	
P082	Curnt pos at poff	0	✓	
P083	Preset position data	-268435455 to 268435455	✓	
P100	Drive Program parameter U(00)	0	✓	
P101	Drive Program parameter U(01)	0	✓	
P102	Drive Program parameter U(02)	0	✓	
P103	Drive Program parameter U(03)	0	✓	
P104	Drive Program parameter U(04)	0	✓	
P105	Drive Program parameter U(05)	0	✓	
P106	Drive Program parameter U(06)	0	✓	
P107	Drive Program parameter U(07)	0	✓	
P108	Drive Program parameter U(08)	0	✓	
P109	Drive Program parameter U(09)	0	✓	
P110	Drive Program parameter U(10)	0	✓	
P111	Drive Program parameter U(11)	0	✓	
P112	Drive Program parameter U(12)	0	✓	
P113	Drive Program parameter U(13)	0	✓	
P114	Drive Program parameter U(14)	0	✓	
P115	Drive Program parameter U(15)	0	✓	
P116	Drive Program parameter U(16)	0	✓	
P117	Drive Program parameter U(17)	0	✓	
P118	Drive Program parameter U(18)	0	✓	
P119	Drive Program parameter U(19)	0	✓	
P120	Drive Program parameter U(20)	0	✓	
P121	Drive Program parameter U(21)	0	✓	
P122	Drive Program parameter U(22)	0	✓	
P123	Drive Program parameter U(23)	0	✓	
P124	Drive Program parameter U(24)	0	✓	
P125	Drive Program parameter U(25)	0	✓	
P126	Drive Program parameter U(26)	0	✓	
P127	Drive Program parameter U(27)	0	✓	
P128	Drive Program parameter U(28)	0	✓	
P129	Drive Program parameter U(29)	0	✓	
P130	Drive Program parameter U(30)	0	✓	
P131	Drive Program parameter U(31)	0	✓	
P140	EzCOM number of data	5	✓	
P141	EzCOM destination 1 address	1	✓	
P142	EzCOM destination 1 register	0000	✓	
P143	EzCOM source 1 register	0000	✓	
P144	EzCOM destination 2 address	1	✓	
P145	EzCOM destination 2 register	0000	✓	
P146	EzCOM source 2 register	0000	✓	

"P" Group Parameters		Default Setting	b031=10	User Setting
Func. Code	**Name**	**(EU)**		
P147	EzCOM destination 3 address	1	✓	
P148	EzCOM destination 3 register	0000	✓	
P149	EzCOM source 3 register	0000	✓	
P150	EzCOM destination 4 address	1	✓	
P151	EzCOM destination 4 register	0000	✓	
P152	EzCOM source 4 register	0000	✓	
P153	EzCOM destination 5 address	1	✓	
P154	EzCOM destination 5 register	0000	✓	
P155	EzCOM source 5 register	0000	✓	
P160	Option I/F cmd W register 1	0000	✓	
P161	Option I/F cmd W register 2	0000	✓	
P162	Option I/F cmd W register 3	0000	✓	
P163	Option I/F cmd W register 4	0000	✓	
P164	Option I/F cmd W register 5	0000	✓	
P165	Option I/F cmd W register 6	0000	✓	
P166	Option I/F cmd W register 7	0000	✓	
P167	Option I/F cmd W register 8	0000	✓	
P168	Option I/F cmd W register 9	0000	✓	
P169	Option I/F cmd W register 10	0000	✓	
P170	Option I/F cmd R register 1	0000	✓	
P171	Option I/F cmd R register 2	0000	✓	
P172	Option I/F cmd R register 3	0000	✓	
P173	Option I/F cmd R register 4	0000	✓	
P174	Option I/F cmd R register 5	0000	✓	
P175	Option I/F cmd R register 6	0000	✓	
P176	Option I/F cmd R register 7	0000	✓	
P177	Option I/F cmd R register 8	0000	✓	
P178	Option I/F cmd R register 9	0000	✓	
P179	Option I/F cmd R register 10	0000	✓	
P180	Profibus node address	0	×	
P181	Profibus clear mode	00	×	
P182	Profibus Map selection	00	×	
P190	CompoNet node address	0	×	
P192	DeviceNet node address	63	×	
P195	ML2 frame length	00	×	
P196	ML2 node address	21	×	
P200	Serial comms mode	00	✓	
P201	Modbus external register 1	0000	✓	
P202	Modbus external register 2	0000	✓	
P203	Modbus external register 3	0000	✓	
P204	Modbus external register 4	0000	✓	
P205	Modbus external register 5	0000	✓	
P206	Modbus external register 6	0000	✓	
P207	Modbus external register 7	0000	✓	
P208	Modbus external register 8	0000	✓	
P209	Modbus external register 9	0000	✓	
P210	Modbus external register 10	0000	✓	
P211	Modbus register format 1	00	✓	
P212	Modbus register format 2	00	✓	

"P" Group Parameters		Default Setting	b031=10	User Setting
Func. Code	**Name**	**(EU)**		
P213	Modbus register format 3	00	✓	
P214	Modbus register format 4	00	✓	
P215	Modbus register format 5	00	✓	
P216	Modbus register format 6	00	✓	
P217	Modbus register format 7	00	✓	
P218	Modbus register format 8	00	✓	
P219	Modbus register format 9	00	✓	
P220	Modbus register format 10	00	✓	
P221	Modbus register scaling 1	1.000	✓	
P222	Modbus register scaling 2	1.000	✓	
P223	Modbus register scaling 3	1.000	✓	
P224	Modbus register scaling 4	1.000	✓	
P225	Modbus register scaling 5	1.000	✓	
P226	Modbus register scaling 6	1.000	✓	
P227	Modbus register scaling 7	1.000	✓	
P228	Modbus register scaling 8	1.000	✓	
P229	Modbus register scaling 9	1.000	✓	
P230	Modbus register scaling 10	1.000	✓	
P301	Modbus internal register 1	0000	✓	
P302	Modbus internal register 2	0000	✓	
P303	Modbus internal register 3	0000	✓	
P304	Modbus internal register 4	0000	✓	
P305	Modbus internal register 5	0000	✓	
P306	Modbus internal register 6	0000	✓	
P307	Modbus internal register 7	0000	✓	
P308	Modbus internal register 8	0000	✓	
P309	Modbus internal register 9	0000	✓	
P310	Modbus internal register 10	0000	✓	
P400	Big/Little endian selection	00	✓	

Appendix D
CE-EMC Installation Guidelines

D-1 CE-EMC Installation Guidelines

You are required to satisfy the EMC directive (2004/108/EC) when using an MX2 inverter in an EU country.

To satisfy the EMC directive and to comply with standard, you need to use a dedicated EMC filter suitable for each model, and follow the guidelines in this section. Following table shows the compliance condition for reference.

Table 1: Condition for the compliance

Model	Cat.	Carrier f	Motor cable
1-ph. 200V class	C1	15 kHz	25 m (Shielded)
3-ph. 400V class	C2	15 kHz	100 m (Shielded)
3-ph. 200V class	C1	15 kHz	25 m (Shielded)
	C2	15 kHz	50 m (Shielded)

Table 2: Applicable EMC filter

Input class	Inverter model	Filter model RASMI
1-ph. 200V class	AB001 / AB002 / AB004	AX-FIM1010-RE (10A)
	AB007	AX-FIM1014-RE (14A)
	AB015 / AB022	AX-FIM1024-RE (24A)
3-ph. 200V class	A2001 / A2002 / A2004 / A2007	AX-FIM2010-RE (10A)
	A2015 / A2022	AX-FIM2020-RE (20A)
	A2037	AX-FIM2030-RE (30A)
	A2055 / A2075	AX-FIM2060-RE (60A)
	A2110	AX-FIM2080-RE (80A)
	A2150	AX-FIM2100-RE (100A)
3-ph. 400V class	A4004 / A4007	AX-FIM3005-RE (5A)
	A4015 / A4022 / A4030	AX-FIM3010-RE (10A)
	A4040	AX-FIM3014-RE (14A)
	A4055 / A4075	AX-FIM3030-RE (23A)
	A4110 / A4150	AX-FIM3050-RE (50A)

D-1-1 Important notes

1. Input choke or other equipment is required if necessary to comply with EMC directive from the harmonic distortion point of view (IEC 61000-3-2 and 4).
2. If the motor cable length exceeds 25 m, use output choke to avoid unexpected problem due to the leakage current from the motor cable (such as malfunction of the thermal relay, vibration of the motor, etc.).
3. As user you must ensure that the HF (high frequency) impedance between adjustable frequency inverter, filter, and ground is as small as possible.
   - Ensure that the connections are metallic and have the largest possible contact areas (zinc-plated mounting plates).
4. Avoid conductor loops that act like antennas, especially loops that encompass large areas.
   - Avoid unnecessary conductor loops.
   - Avoid parallel arrangement of low-level signal wiring and power-carrying or noise-prone conductors.

5. Use shielded wiring for the motor cable and all analog and digital control lines.
   - Allow the effective shield area of these lines to remain as large as possible; i.e., do not strip away the shield (screen) further away from the cable end than absolutely necessary.
   - With integrated systems (for example, when the adjustable frequency inverter is communicating with some type of supervisory controller or host computer in the same control cabinet and they are connected at the same ground + PE-potential), connect the shields of the control lines to ground + PE (protective earth) at both ends. With distributed systems (for example the communicating supervisory controller or host computer is not in the same control cabinet and there is a distance between the systems), we recommend connecting the shield of the control lines only at the end connecting to the adjustable frequency inverter. If possible, route the other end of the control lines directly to the cable entry section of the supervisory controller or host computer. The shield conductor of the motor cables always must connected to ground + PE at both ends.
   - To achieve a large area contact between shield and ground + PE-potential, use a PG screw with a metallic shell, or use a metallic mounting clip.
   - Use only cable with braided, tinned copper mesh shield (type “CY”) with 85% coverage.
   - The shielding continuity should not be broken at any point in the cable. If the use of reactors, contactors, terminals, or safety switches in the motor output is necessary, the unshielded section should be kept as short as possible.
   - Some motors have a rubber gasket between terminal box and motor housing. Very often, the terminal boxes, and particularly the threads for the metal PG screw connections, are painted. Make sure there is always a good metallic connection between the shielding of the motor cable, the metal PG screw connection, the terminal box, and the motor housing. If necessary, carefully remove paint between conducting surfaces.
6. Take measures to minimize interference that is frequently coupled in through installation cables.
   - Separate interfering cables with 0.25 m minimum from cables susceptible to interference. A particularly critical point is laying parallel cables over longer distances. If two cables intersect (one crosses over the other), the interference is smallest if they intersect at an angle of 90°. Cables susceptible to interference should therefore only intersect motor cables, intermediate circuit cables, or the wiring of a rheostat at right angles and never be laid parallel to them over longer distances.

7. Minimize the distance between an interference source and an interference sink (interference- threatened device), thereby decreasing the effect of the emitted interference on the interference sink.
   - You should use only interference-free devices and maintain a minimum distance of 0.25 m from the adjustable frequency inverter.
8. Follow safety measures in the filter installation.
   - If using external EMC filter, ensure that the ground terminal (PE) of the filter is properly connected to the ground terminal of the adjustable frequency inverter. An HF ground connection via metal contact between the housings of the filter and the adjustable frequency inverter, or solely via cable shield, is not permitted as a protective conductor connection. The filter must be solidly and permanently connected with the ground potential so as to preclude the danger of electric shock upon touching the filter if a fault occurs.

To achieve a protective ground connection for the filter:

- Ground the filter with a conductor of at least 10 mm^2 cross-sectional area.
- Connect a second grounding conductor, using a separate grounding terminal parallel to the protective conductor. (The cross section of each single protective conductor terminal must be sized for the required nominal load.)

D-1-2 Installation for MX2 series

Model 3-ph. 200 V class and 3-ph. 400 V class are the same concept for the installation.

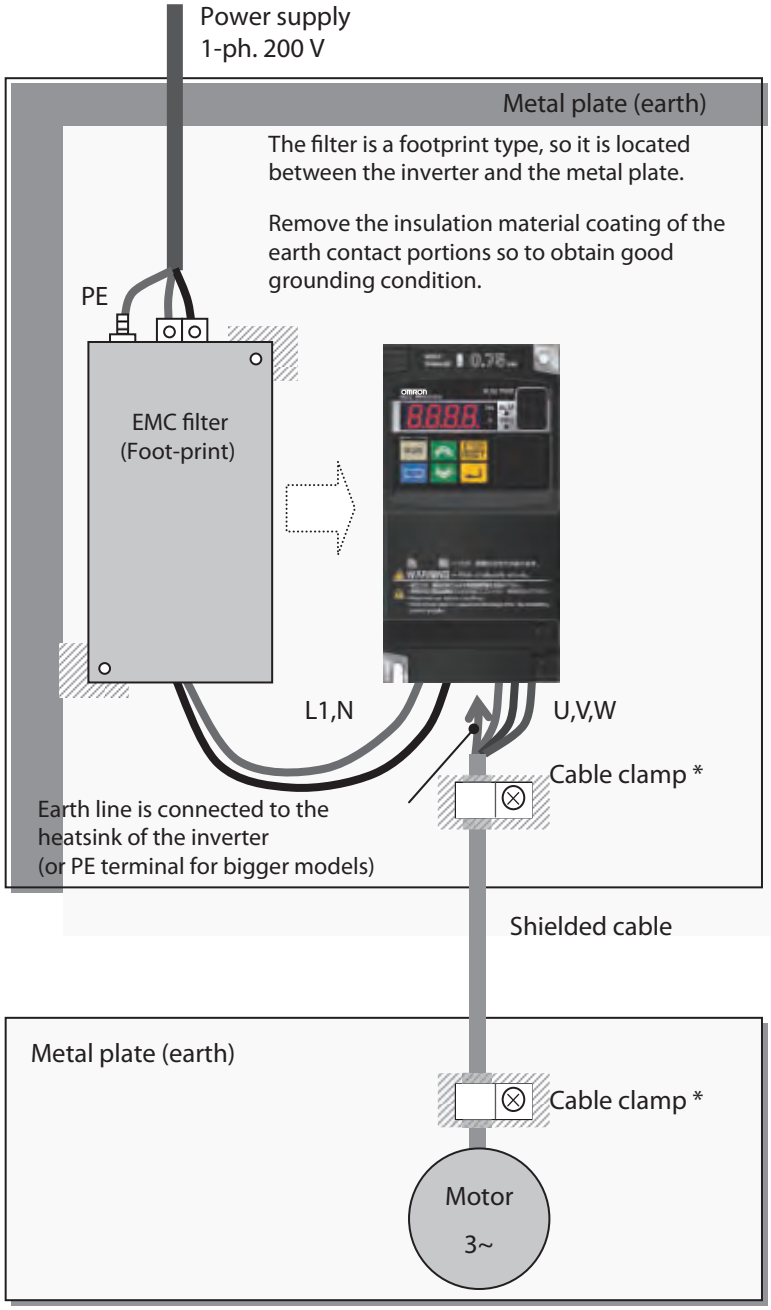

* Both earth portions of the shielded cable must be connected to the earth point by cable clamps.

Input choke or equipment to reduce harmonic current is necessary for CE marking (IEC 61000-3-2 and IEC61000-3-4) from the harmonic current point of view, even conducted emission and radiated emission passed without the input choke.

D-2 Omron EMC Recommendations

⚠ **WARNING** This equipment should be installed, adjusted, and serviced by qualified personal familiar with construction and operation of the equipment and the hazards involved. Failure to observe this precaution could result in bodily injury.

Use the following checklist to ensure the inverter is within proper operating ranges and conditions.

1. The power supply to MX2 inverters must meet these specifications:
   - Voltage fluctuation ±10% or less
   - Voltage imbalance ±3% or less
   - Frequency variation ±4% or less
   - Voltage distortion THD =10% or less
2. Installation measure:
   - Use a filter designed for MX2 inverter. Refer to the instruction of the applicable external EMC filter.
3. Wiring:
   - Shielded wire (screened cable) is required for motor wiring, and the length must be 25 meter or less.
   - If the motor cable length exceeds the value shown above, use output choke to avoid unexpected problem due to the leakage current from the motor cable.
   - Lowering carrier frequency will help to satisfy EMC requirements.
   - Separate the power input and motor wiring from the signal/process circuit wiring.
4. Environmental conditions-when using a filter, follow these guidelines:
   - Ambient temperature: -10 to 40°C
   - Humidity: 20 to 90% RH (non-condensing)
   - Vibration: 5.9 m/sec2 (0.6 G) 10 ~ 55Hz
   - Location: 1000 meters or less altitude, indoors (no corrosive gas or dust)

Appendix E
Safety (ISO 13849-1)

E-1 Introduction

The Gate Suppress function can be utilized to perform a safe stop according to the EN60204-1, stop category 0 (Uncontrolled stop by power removal). It is designed to meet the requirements of the ISO13849-1, PL=d and IEC61508 SIL 2 only in a system in which EDM signal is monitored by an “external device monitor”.

E-2 Stop Category defined in EN60204-1

Category 0: Uncontrolled stop by immediate (< 200 ms) shut-down of the power supply to the actuators.

Category 1: Controlled stop by interrupting the power supply to the actuator level if, for example, the hazardous movement has been brought to a standstill (time-delayed shut-down of the power supply).

Category 2: Controlled stop. The power supply to the drive element is not interrupted. Additional measures to EN 1037 (protection from unexpected restart) are necessary.

E-3 How it works

Interrupting the current to GS1 or GS2, for example removing the link between either GS1 or GS2 and PLC or both GS1/GS2 and PLC disables the drive output, i.e. the power supply to the motor is cut by stopping the switching of the output transistors in a safe way. EDM output is activated when GS1 and GS2 are given to the drive.

Always use both inputs to disable the drive. EDM output conducts when both GS1 and GS2 circuits are working properly. If for any reason only one channel is opened, the drive output is stopped but the EDM output is not activated. In this case the Safe Disable input wiring must be checked.

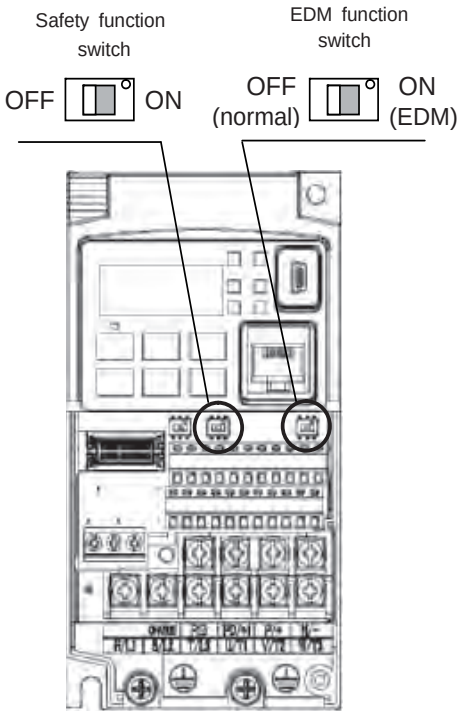

E-4 Activation

Turning on the safety switch automatically assign the GS1 input and GS2 input automatically.

To assign EDM (external device monitor) output, please turn the EDM function switch on. EDM output is automatically assigned on intelligent output terminal 11. (When safety switch or EDM switch is turned off, the intelligent input and output terminal assigned on will be set as “no” function, and contact will remain normally off.)

Always use both inputs to disable the drive. If for any reason only one channel is opened, the drive output is stopped but the EDM output is not activated. In this case the Safe Disable input wiring must be checked.

E-5 Installation

According to the safety standard listed above, please install referring to the example. Please be sure to use the both GS1 and GS2, and construct the system that GS1 and GS2 are both turned off when safety input is given to the inverter.

⚠ **Caution** Be sure to carry out the prooftest when installation is ready before operation.

When the Gate Suppress function is utilized, connect the drive to a safety certified interrupting device utilizing EDM output signal to reconfirm both safety inputs GS1 and GS2.

Item	Function code	Data	Description
Multi-function input 3 and 4 selection	C003	77	GS1: Safety input 1 *1
	C004	78	GS2: Safety input 2 *1
Multi-function input 3 and 4 operation selection	C013	01	NC: Normally Closed *1
	C014	01	NC: Normally Closed *1
Multi-function output terminal 11 selection	C021	62	EDM: External Device Monitor *2
Multi-function output terminal 11 contact selection	C031	00	NO: Normally Open *2
GS input mode	b145	00	No trip
		01	Trip *3 *4

Note 1 They are automatically set when safety switch is turned ON, cannot be changed.

Note 2 Those are automatically assigned when EDM switch is turned ON, cannot be changed.

Note 3 Inverter trips with “E37”. When competing with external trip (E12), E37 has priority.

Note 4 While the drive is the trip status “E37” and either GS1 or GS2 is activated, on the safety by is not guaranteed.

E-6 Wiring example

When the Gate Suppress function is utilized, connect the drive to a safety certified interrupting device utilizing EDM output signal to reconfirm both safety inputs GS1 and GS2.

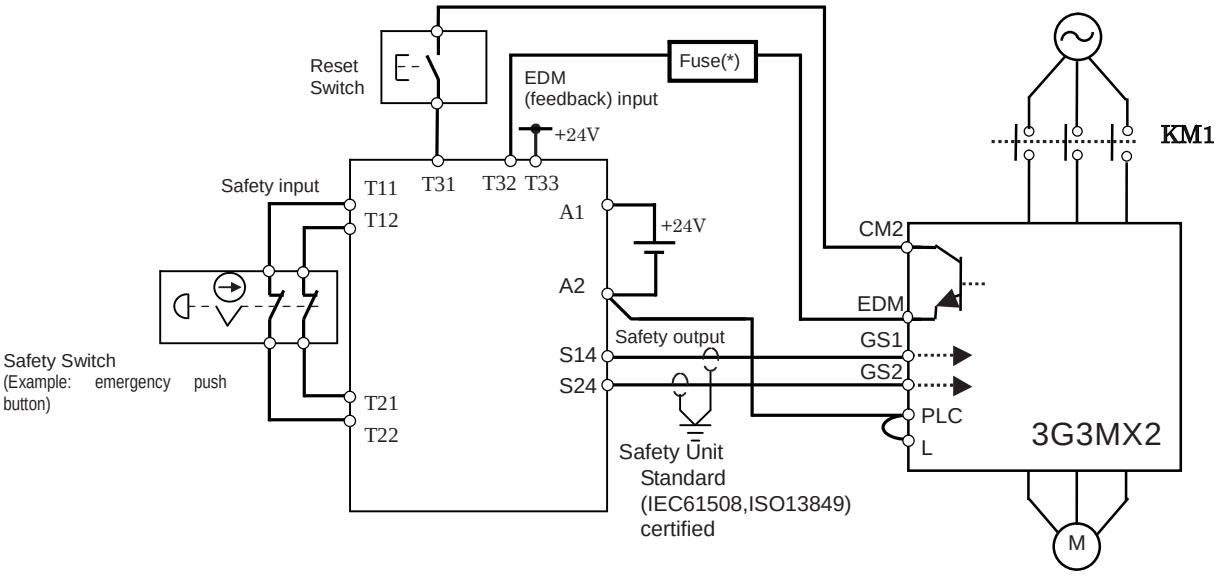

(*) Specifications of the fuse:

The arch extinguish fuse with rated voltage 250 VAC, rated current 100 mA complies to either IEC6127-2/-3/-4.

Example:

SOC ··· http://www.socfuse.com

EQ series 250 VAC, 100 mA (UL, SEMKO, BSI)

littel ··· http://www.littelfuse.co.jp

216 series 250 VAC, 100 mA (CCC, UL, CSA, SEMKO, CE, VDE)

Any external signal voltage connected to the 3G3MX2 must be from a SELV Power.

By pressing the emergency stop button, the current to GS1 and GS2 is shut off, and the inverter output is shut off. By this, motor is free-running. This behaviour is according to the stop category 0 defined in EN60204.

Note 1 Above is the example to use the intelligent input terminal with source logic. When it is used with sink logic, the wiring is to be modified.

Note 2 The wire for safety relay and emergency input signal are to be shielded coaxial cable for example RS174/U (produced by LAPP) by MIL-C17, or KX2B by NF C 93-550 with diameter 2.9 mm with less than 2 meters. Please be sure to ground the shielding.

Note 3 All the inductance related parts such as relay and contactor are required to contain the over-voltage protection circuit.

⚠ **Caution** Inverter doesn't block the current flowing into itself when it is not powered. This may cause the closed circuit when two or more inverters are connected to common I/O wiring as shown below to result in unexpected turning on the input. This may lead to dangerous situation. To avoid this closed circuit, please put the diode (rated: 50 V/0.1 A) in the path as described below.

⚠ **Caution** If the protection diodes used when the units are in wired parallel are only single diodes then their condition would be checked as part of the proof test.

In case of Source logic:

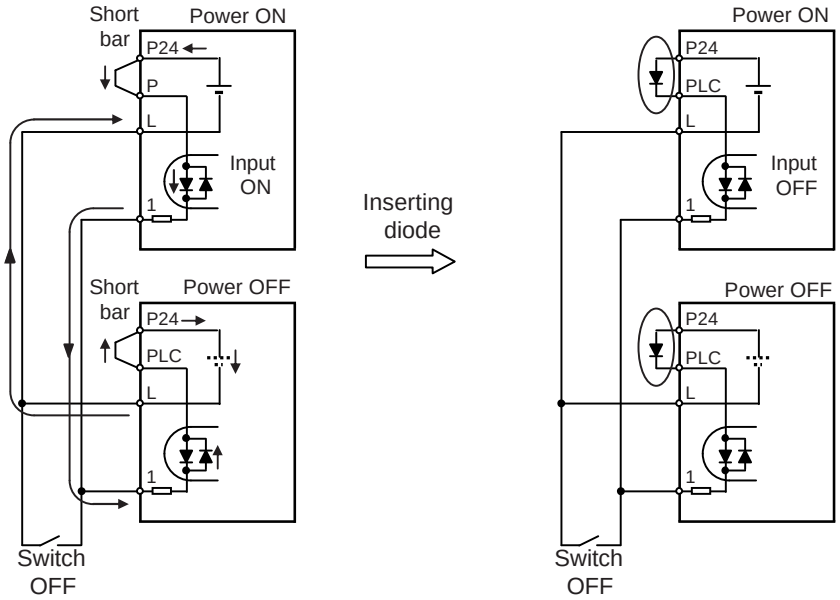

In case of Sink logic:

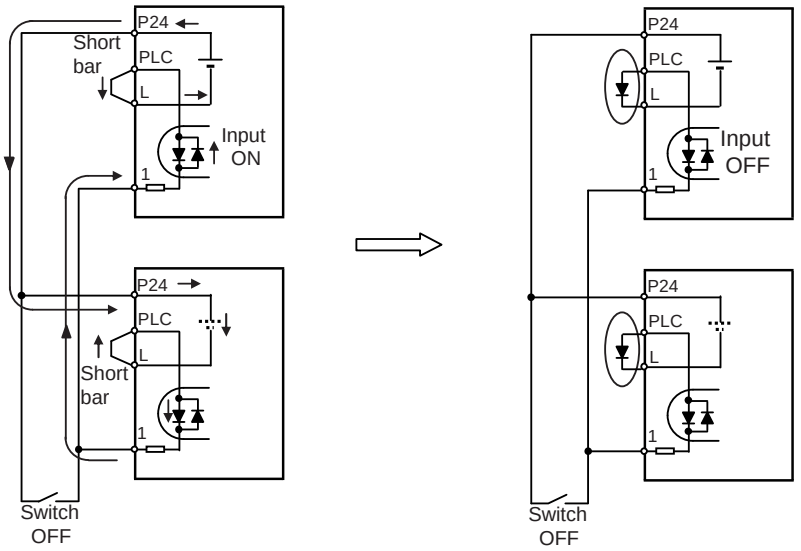

The current loop cause turn the input ON even the switch is off when diode is not inserted.

The current loop is to be prevented by inserting diode instead of short bar.

E-7 Components to be combined

Followings are the example of the safety devices to be combined.

Series	Model	Norms to comply	Certification date
GS9A	301	ISO13849-2 cat4, SIL3	06.06.2007
G9SX	GS226-T15-RC	IEC61508 SIL1-3	04.11.2004
NE1A	SCPU01-V1	IEC61508 SIL3	27.09.2006

The configuration of and components used in any circuit other than an appropiately pre approved safety module that interfaces with the 3G3MX2 GS1/GS2 and EDM ports must be at least equivalent to CAT 3 PLd under ISO 13849-1:2006 in order to be able to claim an overall CAT 3 PLd for the 3G3MX2 and external circuit combination.

The EMI level that the external module has been assessed to must be at least equivalent to that of Appendix E IEC 62061.

E-8 Periodical check (Proof test)

Proof test is essential to be able to reveal any dangerous undetected failures after a period of time, in this case 1 year. Carrying out this proof test at least one a year is the condition to comply the ISO13849-1 PLd.

- To activate (give current to) GS1 and GS2 simultaneously and separately to see output is allowed and EDM is conducting.

Terminal	Status			
GS1	Current OFF	Current ON	Current OFF	Current ON
GS2	Current OFF	Current OFF	Current ON	Current ON
EDM	Conducted	Not conducted	Not conducted	Not conducted
(Output)	Forbidden	Forbidden	Forbidden	Allowed

- To activate (give current to) both GS1 and GS2 to see output is allowed and EDM is not conducting.
- To activate (give current to) GS1, not to activate GS2 and see output is forbidden and EDM is not conducting.
- To activate (give current to) GS2, not to activate GS1 and see output is forbidden and EDM is not conducting.
- To desactivate (interrupt current to) both GS1 and GS2 to see output is forbidden and EDM is conducting.

Be sure to carry out the proof test when installation is ready before operation.

⚠ **Caution** If the protection diodes used when the units are in wired parallel are only single diodes then their condition would be checked as part of the proof test. Check to reconfirm the diodes are not damaged when proof test is done.

E-9 Precautions

⚠ **Caution** To assure, that the Safe Disable function appropiately fulfills the safety requirements of the application, a throughout risk assessment for the whole safety system has to be carried out.

⚠ **Caution** The Safe Disable function does not cut the power supply to the drive and does not provide electrical isolation. Before any installation or maintenance work is done, the drives power supply must be switched off and place a tag/lock-out.

⚠ **Caution** The writing distance for Safe Disable inputs should be shorter than 30 m.

⚠ **Caution** The time from opening the Safe Disable input until the drive output is switched off is less than 10 ms.

E-10 EC DECLARATION OF CONFORMITY

No. EMEC058 A (1/3)

OMRON

EC Declaration of Conformity

We hereby declare that the following products are in conformity with the requirements of the following EC Directive:

Product:	Inverter	
Type:	3G3MX2 series	(Refer to appending types list)
Title and No. of Directive:	EMC Directive	2004/108/EC
	Low Voltage Directive	2006/95/EC

These products are designed and manufactured in accordance with the following standards.

EMI (Electromagnetic Interference): EN61800-3 :2004

Conducted/Radiated:	EN61800-3 :2004

EMS (Electromagnetic Susceptibility): EN61800-3 :2004

ESD:	EN61800-3: 2004/EN61000-4-2 :1995/A1:1998/A2:2001
RF EM Field:	EN61800-3: 2004/EN61000-4-3 :2006/A1:2008
Conducted RF common mode:	EN61800-3: 2004/EN61000-4-6 :2007
Fast Transient:	EN61800-3: 2004/EN61000-4-4 :2004
Surge Power ports:	EN61800-3: 2004/EN61000-4-5 :2006
Voltage Dips and short Interruptions	EN61800-3: 2004/EN61000-4-11 :2004

The examination was performed by Category C1.

LVD (Low Voltage Directive): EN61800-5-1: 2003

The year in which the CE marking was affixed:2009

Manufacturer:

Name: OMRON Corporation, Industrial Automation Company,
Control Device Division H.Q. Automation & Drive Div. Drive Dept. 2

Address: 2-2-1 Nishi-Kusatsu, Kusatsu-city, Shiga-pref, 525-0035 JAPAN

Date: May 27th '09

Signed: _____

E.Ikeno, General Manager

Representative in EU:

Name: OMRON Europe B.V.

Address: Zilverenberg 2, 5234 GM, 's-Hertogenbosch, THE NETHERLANDS

Date: 3.06.2009

Signed: _____

Mr. H. Sintnicolaas, European Manufacturing and Quality Manager

No. EMEC058 A (2/3)

Types List for EC Directive

Model Type	*Rated Input*	*Capacity*	*Remarks*	*Rev.*
3G3MX2-AB001	*Single-phase AC200-240V 50/60Hz*	*0.1kW*	*Standard*	<A>
3G3MX2-AB002	*Single-phase AC200-240V 50/60Hz*	*0.2kW*	*Standard*	<A>
3G3MX2-AB004	*Single-phase AC200-240V 50/60Hz*	*0.4kW*	*Standard*	<A>
3G3MX2-AB007	*Single-phase AC200-240V 50/60Hz*	*0.75kW*	*Standard*	<A>
3G3MX2-AB015	*Single-phase AC200-240V 50/60Hz*	*1.5kW*	*Standard*	<A>
3G3MX2-AB022	*Single-phase AC200-240V 50/60Hz*	*2.2kW*	*Standard*	<A>
3G3MX2-A2001	*Three-phase AC200-240V 50/60Hz*	*0.1kW*	*Standard*	<A>
3G3MX2-A2002	*Three-phase AC200-240V 50/60Hz*	*0.2kW*	*Standard*	<A>
3G3MX2-A2004	*Three-phase AC200-240V 50/60Hz*	*0.4kW*	*Standard*	<A>
3G3MX2-A2007	*Three-phase AC200-240V 50/60Hz*	*0.75kW*	*Standard*	<A>
3G3MX2-A2015	*Three-phase AC200-240V 50/60Hz*	*1.5kW*	*Standard*	<A>
3G3MX2-A2022	*Three-phase AC200-240V 50/60Hz*	*2.2kW*	*Standard*	<A>
3G3MX2-A2037	*Three-phase AC200-240V 50/60Hz*	*3.7kW*	*Standard*	<A>
3G3MX2-A2055	*Three-phase AC200-240V 50/60Hz*	*5.5kW*	*Standard*	<A>
3G3MX2-A2075	*Three-phase AC200-240V 50/60Hz*	*7.5kW*	*Standard*	<A>
3G3MX2-A2110	*Three-phase AC200-240V 50/60Hz*	*11.0kW*	*Standard*	<A>
3G3MX2-A2150	*Three-phase AC200-240V 50/60Hz*	*15.0kW*	*Standard*	<A>
3G3MX2-A4004	*Three-phase AC380-480V 50/60Hz*	*0.4kW*	*Standard*	<A>
3G3MX2-A4007	*Three-phase AC380-480V 50/60Hz*	*0.75kW*	*Standard*	<A>
3G3MX2-A4015	*Three-phase AC380-480V 50/60Hz*	*1.5kW*	*Standard*	<A>
3G3MX2-A4022	*Three-phase AC380-480V 50/60Hz*	*2.2kW*	*Standard*	<A>
3G3MX2-A4030	*Three-phase AC380-480V 50/60Hz*	*3.0kW*	*Standard*	<A>
3G3MX2-A4040	*Three-phase AC380-480V 50/60Hz*	*4.0kW*	*Standard*	<A>
3G3MX2-A4055	*Three-phase AC380-480V 50/60Hz*	*5.5kW*	*Standard*	<A>
3G3MX2-A4075	*Three-phase AC380-480V 50/60Hz*	*7.5kW*	*Standard*	<A>
3G3MX2-A4110	*Three-phase AC380-480V 50/60Hz*	*11.0kW*	*Standard*	<A>
3G3MX2-A4150	*Three-phase AC380-480V 50/60Hz*	*15.0kW*	*Standard*	<A>

No. EMEC058 A (3/3)

Revision History

Rev.	Date	Revised Contents
A	2009/5/20	Original Version

E-11 Safety Certification

2010-02-03

TÜVRheinland®
Precisely Right.

Annex to Report-No.: 968/M 247.00/10

Summary of the characteristic data for use of the product in safety-related applications

Product: Inverter Drive 3G3MX2 series and MX2 series with STO feature

Customer: Omron Corporation
Shiokoji Horikawa, Shimogyo-ku
Kyoto 600-8530
Japan

1. Characteristic data acc. to IEC 61508-1 till -7 and IEC 62061

1.1 Data for use of the product as a subsystem in safety functions

	Value	Remark
Safety Integrity Level	SIL CL 2	
PFH	1,06 E-07 1/h	corresponds to 10,6 % of SIL 2
PFD_{Av}	4,73 E-04	corresponds to 4,7 % of SIL 2; this value is valid for the stated Proof Test Interval T
Proof Test Interval T	1 a	

Remark: At a PFH value, which is < 1 % of the allowed SIL-threshold, the performance of special Proof Tests within the mission time of the product is regarded as not necessary.

2. Characteristic data acc. to EN ISO 13849-1

	Value	Remark
Performance Level	PL d	
Category	Cat. 3	
$MTTF_d$	High	
Average Diagnostic Coverage DC_{av}	Low	

Besides these summary of the characteristic data always the information provided in the product documents of the manufacturer have to be considered.

Source of failure rate data: SN 29500, so far no data from the component manufacturer were available.

Max. average ambient temperature: 40°C

General assumption that 50 % of the component failures are dangerous failures (λ_d = 0,5 λ, $MTTF_d$ = 2 MTTF), so far no further information was available

Appendix F
Unprotected Inverter Operation Mode

F-1 Unprotected Inverter Operation Mode

1. With this function, when unprotected signal is input, the inverter can continue driving.
2. It means that some trips are reflected or (it not possible to avoid), they are automatically reset with no limits.
3. The forced driving is only activated via digital input terminal. (cannot be activated via fieldbus or Drive Programming.)
4. The software trips is invalid in this mode.
5. When a hardware trip occurs, the inverter is turned off and restarts automatically. Then, the inverter drives again. However, when the inverter was in auto tuning state, retrying operation decreases the accuracy and the inverter makes the transition to the trip state.
6. The Bracking resistor overload (BRD) is disabled. However, BRD operates according to %ED, and doesn't detect BRD overload trip. Moreover, beacuse the EXT trip is disabled on the IO signal, the protection by opening EXT circuit with the temperature relay built-in BRD resistance is invalid.
7. The Safety function has priority over the Unprotected Operation mode function.
8. The display shows Unprotected Inverter Operation status:

LED Digital Operator:

7-seg LED displays "7 SEGMENT FONT" when changing to "Unprotected Inverter Operation mode", and PRG LED blinks. This mode is canceled by pressing any key, but the PRG LED blink is not cancelled. During "Unprotected Inverter Operation mode", d090 (Warning monitor) displays "UIO". However, when changing to "Unprotected Inverter Operation mode" and a warning occurs, the warning code is displayed in d090 (Warning monitor).

LCD Digital Operator:

The "WARNING mode" display will appear automatically when changing to "Unprotected Inverter Operation mode", and displays the next screen. Moreover, WARNING LED and orange backlight turns on.

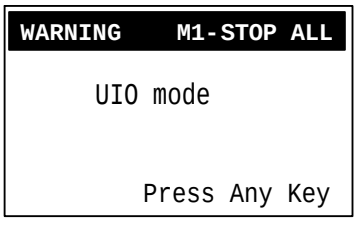

This mode is cancelled by pressing any key, but the WARNING LED and the orange backlight lighting are not cancelled. During "Unprotected Inverter Operation mode", d090 (Warning monitor) displays "UIO". Moreover, the WARNING mode screen displays the following screen:

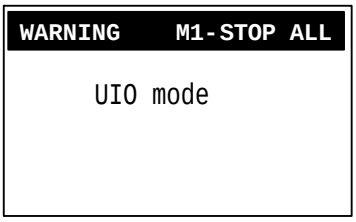

However, when changing to “Unprotected Inverter Operation mode” and a warning occurs, the warning code is displayed in d090 (Warning monitor).

9. The setting procedure for this function is as follows (only via operator):

   When UIO digital input is turned on, if it is turned off before 60 sec, the function is not applied and warranty is kept.

   When UIO digital input is kept active for more than 60 sec, the function is effective (UIO status flag is enabled) and inverter warranty is lost.

   The UIO status history flag is permanently stored in the inverter and cannot be deleted.

10. The “Unprotected Inverter Operation mode” is out of warranty.

11. All of responsability of PS/PL accident by this function is on the user side.

    OMRON does not accept any liability in case the use of this function leads to the personal or material damage.

    This function is designed in a way that it is not possible to enable inadvertently. As well this manual does not contain enough information for enabling it, reducing the risk of activation.

    The aditional information for enabling this function has to be requested to OMRON representative.

OMRON EUROPE B.V. Wegalaan 67-69, NL-2132 JD, Hoofddorp, The Netherlands.
Tel: +31 (0) 23 568 13 00 Fax: +31 (0) 23 568 13 88 industrial.omron.eu

Austria
Tel: +43 (0) 2236 377 800
industrial.omron.at

Belgium
Tel: +32 (0) 2 466 24 80
industrial.omron.be

Czech Republic
Tel: +420 234 602 602
industrial.omron.cz

Denmark
Tel: +45 43 44 00 11
industrial.omron.dk

Finland
Tel: +358 (0) 207 464 200
industrial.omron.fi

France
Tel: +33 (0) 1 56 63 70 00
industrial.omron.fr

Germany
Tel: +49 (0) 2173 6800 0
industrial.omron.de

Hungary
Tel: +36 (0) 1 399 30 50
industrial.omron.hu

Italy
Tel: +39 02 32 681
industrial.omron.it

South Africa
Tel: +27 (0) 11 579 2600
industrial.omron.eu

Netherlands
Tel: +31 (0) 23 568 11 00
industrial.omron.nl

Norway
Tel: +47 (0) 22 65 75 00
industrial.omron.no

Poland
Tel: +48 22 458 66 66
industrial.omron.pl

Portugal
Tel: +351 21 942 94 00
industrial.omron.pt

Russia
Tel: +7 495 648 94 50
industrial.omron.ru

Spain
Tel: +34 902 100 221
industrial.omron.es

Sweden
Tel: +46 (0) 8 632 35 00
industrial.omron.se

Switzerland
Tel: +41 (0) 41 748 13 13
industrial.omron.ch

Turkey
Tel: +90 212 467 30 00
industrial.omron.com.tr

United Kingdom
Tel: +44 (0) 870 752 08 61
industrial.omron.co.uk

Note: Specifications subject to change without notice.
Cat. No. I570-E2-02B

OMRON