OMRON

Machine Automation Controller
NX7

Flagship controller performs large-scale, high-speed, high-accuracy control by synchronizing up to 256 axes with the fastest cycle time of 125 µs



Features

- Implemented OPC UA as standard feature. OPC UA (NX701-1□□□)
- Integration of Logic and Motion in one CPU.
- Conforms to IEC 61131-3 (JIS B 3503) standard programming and PLCopen function blocks for Motion Control. Programming with variables allows users to create complex programs efficiently.
- Fast and accurate control by synchronizing all EtherCAT devices, such as vision sensors, servo drives, and field devices, with the PLC and Motion Engines.
- Offers speed without compromising on reliability and robustness expected from PLCs.
- Complete RAS functions: Transmission frame error check, timeout, bus diagnosis, Watchdog (WDT), memory check, and topology check, etc.
- Ideal for large-scale, fast, and highly-accurate control with up to 256 axes.
- Linear and circular interpolation.
- Electronic gear and cam synchronization.
- The Controller can be directly connected to a database. No special Unit, software, nor middleware is required. (NX701-1□20)

System Configuration

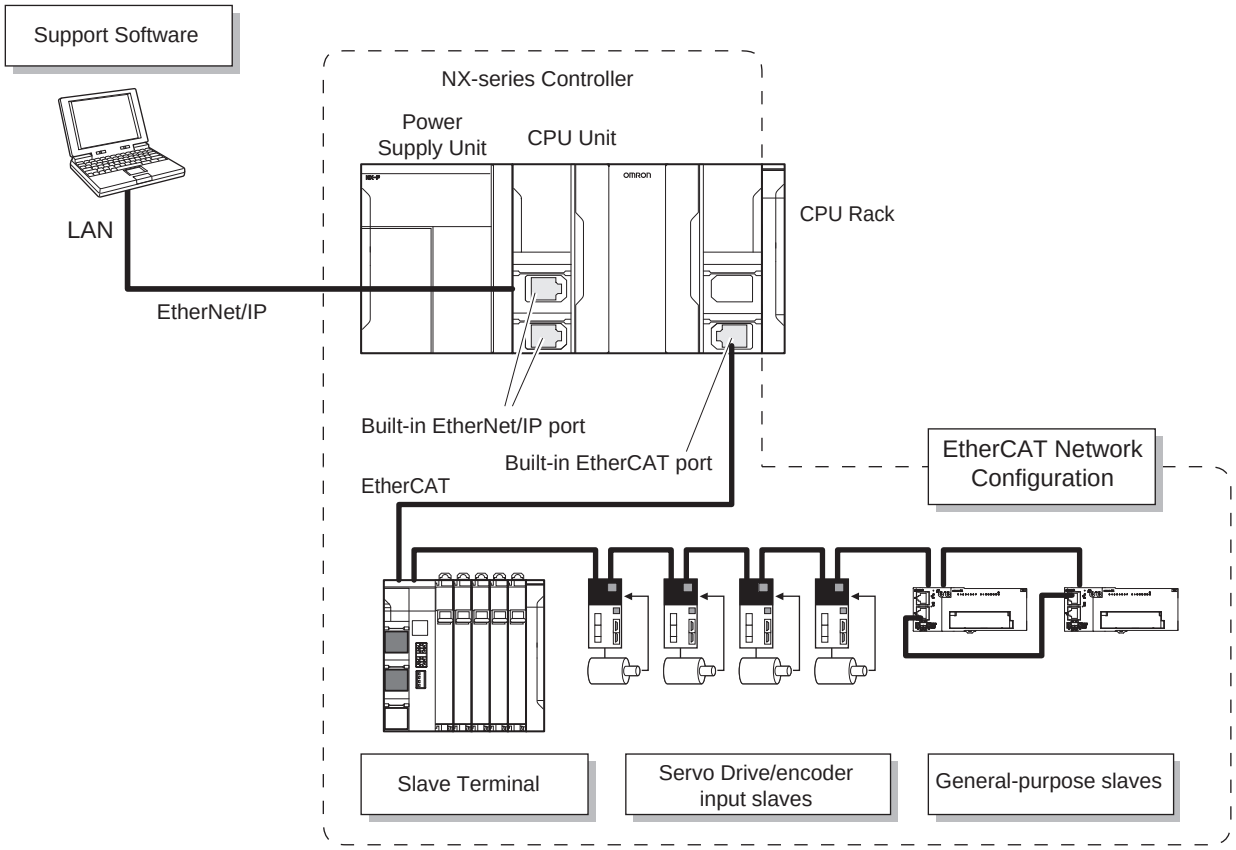

Ordering Information

Applicable standards

Refer to the OMRON website (www.ia.omron.com) or ask your OMRON representative for the most recent applicable standards for each model.

NX701 CPU Units

Product Name	Specifications			Current (Power) consumption	Model
	Program capacity	Memory capacity for variables	Number of motion axes		
NX701 CPU Units OPC UA Support 	80 MB	4 MB: Retained during power interruption 256 MB: Not retained during power interruption	256	40 W (including SD Memory Card and End Cover)	**NX701-1700**
			128		**NX701-1600**
NX701 Database Connection CPU Units OPC UA Support 		4 MB: Retained during power interruption 256 MB: Not retained during power interruption (including Memory for CJ-series Units)	256		**NX701-1720 *1**
			128		**NX701-1620 *1**

*1. NX701-1720-DH, NX701-1620-DH are products equipped with time series data collection system. Consult your Omron sales representative for details.

Accessories

The following accessories come with the CPU Unit.

Product Name	Model	
	NX701-1□00	NX701-1□20
Battery	CJ1W-BAT01	
End Cover	NX-END01 (must be attached to the right end of the CPU Rack)	
End Plate	---	
Fan Unit	NX-FAN01	
SD Memory Card (Flash Memory)	---	HMC-SD492

Power Supply Units

One Power Supply Unit is required for each Rack.

Product Name	Power supply voltage	Output capacity	Options			Model
		Total power consumption	24-VDC service power supply	RUN output	Maintenance forecast monitor	
AC Power Supply Unit	100 to 240 VAC	90 W	No	Yes	No	**NX-PA9001**
DC Power Supply Unit	24 VDC	70 W				**NX-PD7001**

Automation Software Sysmac Studio

The Sysmac Studio is the software that provides an integrated environment for setting, programming, debugging and maintenance of machine automation controllers including the NJ/NX-series CPU Units, NY-series Industrial PC, EtherCAT Slave, and the HMI.

For details, refer to your local OMRON website and *Sysmac Studio Catalog* (Cat. No. P138).

Collection of software functional components Sysmac Library

Please download it from following URL and install to Sysmac Studio.
https://www.ia.omron.com/sysmac_library/

Typical Models

Product	Features	Model
Vibration Suppression Library	The Vibration Suppression Library is used to suppress residual vibration caused by the operation of machines.	**SYSMAC-XR006**
Device Operation Monitor Library	The Device Operation Monitor Library is used to monitor the operation of devices such as air cylinders, sensors, motors, and other devices.	**SYSMAC-XR008**
Dimension Measurement Library	The Dimension Measurement Library is used to dimension measurement with ZW-8000/7000/5000 Confocal Fiber Displacement Sensor, or E9NC-TA0 Contact-Type Smart Sensor.	**SYSMAC-XR014**

Recommended EtherCAT and EtherNet/IP Communications Cables

Use a straight STP (shielded twisted-pair) cable of category 5 or higher with double shielding (aluminum tape and braiding) for EtherCAT.
For EtherNet/IP, required specification for the communications cables varies depending on the baud rate.
For 100BASE-TX/10BASE-T, use a straight or cross STP (shielded twisted-pair) cable of category 5 or higher.
For 1000BASE-T, use a straight or cross STP cable of category 5e or higher with double shielding (aluminum tape and braiding).

Cable with Connectors

Item		Recommended manufacturer	Cable length (m)	Model
Wire Gauge and Number of Pairs: AWG26, 4-pair Cable Cable Sheath material: PUR	Cable with Connectors on Both Ends (RJ45/RJ45) Standard RJ45 plug type *1 Cable color: Yellow *2 EtherCAT/ EtherNet/IP (10BASE/100BASE/1000BASE *4) 	OMRON	0.3	**XS6W-6PUR8SS30CM-YF**
			0.5	**XS6W-6PUR8SS50CM-YF**
			1	**XS6W-6PUR8SS100CM-YF**
			2	**XS6W-6PUR8SS200CM-YF**
			3	**XS6W-6PUR8SS300CM-YF**
			5	**XS6W-6PUR8SS500CM-YF**
Wire Gauge and Number of Pairs: AWG22, 2-pair cable	Cable with Connectors on Both Ends (RJ45/RJ45) Rugged RJ45 plug type *1 Cable color: Light blue EtherCAT/ EtherNet/IP (10BASE/100BASE) 	OMRON	0.3	**XS5W-T421-AMD-K**
			0.5	**XS5W-T421-BMD-K**
			1	**XS5W-T421-CMD-K**
			2	**XS5W-T421-DMD-K**
			5	**XS5W-T421-GMD-K**
			10	**XS5W-T421-JMD-K**
	Cable with Connectors on Both Ends (M12 Straight/M12 Straight) Shield Strengthening Connector cable *3 M12/Smartclick Connectors Cable color: Black EtherCAT/ EtherNet/IP (10BASE/100BASE) 	OMRON	0.5	**XS5W-T421-BM2-SS**
			1	**XS5W-T421-CM2-SS**
			2	**XS5W-T421-DM2-SS**
			3	**XS5W-T421-EM2-SS**
			5	**XS5W-T421-GM2-SS**
			10	**XS5W-T421-JM2-SS**
	Cable with Connectors on Both Ends (M12 Straight/RJ45) Shield Strengthening Connector cable *3 M12/Smartclick Connectors Rugged RJ45 plug type Cable color: Black EtherCAT/ EtherNet/IP (10BASE/100BASE) 	OMRON	0.5	**XS5W-T421-BMC-SS**
			1	**XS5W-T421-CMC-SS**
			2	**XS5W-T421-DMC-SS**
			3	**XS5W-T421-EMC-SS**
			5	**XS5W-T421-GMC-SS**
			10	**XS5W-T421-JMC-SS**

*1. Cables with standard RJ45 plugs are available in the following lengths: 0.2 m, 0.3 m, 0.5 m, 1 m, 1.5 m, 2 m, 3 m, 5 m, 7.5 m, 10 m, 15 m, 20 m.
Cables with rugged RJ45 plugs are available in the following lengths: 0.3 m, 0.5 m, 1 m, 2 m, 3 m, 5 m, 10 m, 15 m.
For details, refer to the *Industrial Ethernet Connectors Catalog* (Cat. No. G019).
*2. Cable colors are available in yellow, green, and blue.
*3. For details, contact your OMRON representative.
*4. The products can be used only with the NX701/NX502.

Cables / Connectors

Item			Recommended manufacturer	Model
Products for EtherCAT or EtherNet/IP (1000BASE-T*2/100BASE-TX)	Wire Gauge and Number of Pairs: AWG24, 4-pair Cable	Cables	Kuramo Electric Co.	KETH-SB *1
		RJ45 Connectors	Panduit Corporation	MPS588-C *1
Products for EtherCAT or EtherNet/IP (100BASE-TX/10BASE-T)	Wire Gauge and Number of Pairs: AWG22, 2-pair Cable	Cables	Kuramo Electric Co.	KETH-PSB-OMR *3
			JMACS Japan Co., Ltd.	PNET/B *3
		RJ45 Assembly Connector 	OMRON	XS6G-T421-1 *3

*1. We recommend you to use the above Cable and RJ45 Connector together.
*2. The products can be used only with the NX701/NX502.
*3. We recommend you to use the above Cable and RJ45 Assembly Connector together.

Optional Products and Maintenance Products

Product name	Specifications	Model
Memory Cards *1	SD memory card, 2GB	**HMC-SD292**
	SDHC memory card, 4GB	**HMC-SD492**
	SDHC memory card, 16GB	**HMC-SD1A2**

*1. There are restrictions on the combination of CPU Unit version and memory card. Refer to NJ/NX-series CPU Unit Software User's Manual (W501) *8-5-2 Specifications of Supported SD Memory Cards, Folders, and Files* for details.

Product name	Specifications		Model
Battery Set 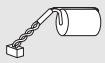	Battery for NX701-□□□□/NJ501-□□□□/ NJ301-□□□□/NJ101-□□□□ NJ/NX-Series CPU Unit maintenance	**Note:** **1.** The battery is included as a standard accessory with the CPU Unit. **2.** The battery service life is 2.5 years at 25°C. (The service life depends on the ambient operating temperature and the power conditions.) **3.** Use batteries within two years of manufacture.	**CJ1W-BAT01**
End Cover 	Mounted to the right-hand side of NX-Series CPU Racks.	One End Cover is provided as a standard accessory with each CPU Unit and I/O Interface Unit.	**NX-END01**

DIN Track Accessories

Product name	Specifications	Model
DIN Track 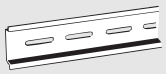	Length: 0.5 m; Height: 7.3 mm	**PFP-50N**
	Length: 1 m; Height: 7.3 mm	**PFP-100N**
	Length: 1 m; Height: 16 mm	**PFP-100N2**
End Plate 	There are 2 stoppers provided with CPU Units and I/O Interface Units as standard accessories to secure the Units on the DIN Track.	**PFP-M**

NX Units

Digital Input Units

Product Name	Specification					Model
	Number of points	Internal I/O common	Rated input voltage	I/O refreshing method	ON/OFF response time	
DC Input Unit  (Screwless Clamping Terminal Block, 12 mm Width/24 mm Width)	4 points	NPN	12 to 24 VDC	Switching Synchronous I/O refreshing and Free-Run refreshing	20 µs max./400 µs max.	**NX-ID3317**
			24 VDC		100 ns max./100 ns max.	**NX-ID3343**
				Input refreshing with input changed time only *		**NX-ID3344**
		PNP	12 to 24 VDC	Switching Synchronous I/O refreshing and Free-Run refreshing	20 µs max./400 µs max.	**NX-ID3417**
			24 VDC		100 ns max./100 ns max.	**NX-ID3443**
				Input refreshing with input changed time only *		**NX-ID3444**
	8 points	NPN		Switching Synchronous I/O refreshing and Free-Run refreshing	20 µs max./400 µs max.	**NX-ID4342**
		PNP				**NX-ID4442**
	16 points	NPN				**NX-ID5342**
		PNP				**NX-ID5442**
	32 points	NPN				**NX-ID6342**
		PNP				**NX-ID6442**
DC Input Unit  (M3 Screw Terminal Block, 30 mm Width)	16 points	For both NPN/PNP	24 VDC	Switching Synchronous I/O refreshing and Free-Run refreshing	20 µs max./400 µs max.	**NX-ID5142-1**
DC Input Unit  (MIL Connector, 30 mm Width)	16 points	For both NPN/PNP	24 VDC	Switching Synchronous I/O refreshing and Free-Run refreshing	20 µs max./400 µs max.	**NX-ID5142-5**
	32 points					**NX-ID6142-5**
DC Input Unit  (Fujitsu/OTAX Connector, 30 mm Width)	32 points	For both NPN/PNP	24 VDC	Switching Synchronous I/O refreshing and Free-Run refreshing	20 µs max./400 µs max.	**NX-ID6142-6**
AC Input Unit  (Screwless Clamping Terminal Block, 12 mm Width)	4 points	200 to 240 VAC, 50/60 Hz (170 to 264 VAC, ±3 Hz)		Free-Run refreshing	10 ms max./40 ms max.	**NX-IA3117**

* To use input refreshing with input changed time, the EtherCAT Coupler Unit with unit version 1.1 or later and the Sysmac Studio version 1.07 or higher are required.

Digital output Units

Product Name	Specification						Model
	Number of points	Internal I/O common	Maximum value of load current	Rated voltage	I/O refreshing method	ON/OFF response time	
Transistor Output Unit  (Screwless Clamping Terminal Block, 12 mm Width/24 mm Width)	2 points	NPN	0.5 A/point, 1 A/Unit	24 VDC	Output refreshing with specified time stamp only *	300 ns max./ 300 ns max.	**NX-OD2154**
		PNP					**NX-OD2258**
	4 points	NPN	0.5 A/point, 2 A/Unit	12 to 24 VDC	Switching Synchronous I/O refreshing and Free-Run refreshing	0.1 ms max./ 0.8 ms max.	**NX-OD3121**
				24 VDC		300 ns max./ 300 ns max.	**NX-OD3153**
		PNP				0.5 ms max./ 1.0 ms max.	**NX-OD3256**
						300 ns max./ 300 ns max.	**NX-OD3257**
			2 A/point, 8 A/Unit			0.5 ms max./ 1.0 ms max.	**NX-OD3268**
	8 points	NPN	0.5 A/point, 4 A/Unit	12 to 24 VDC		0.1 ms max./ 0.8 ms max.	**NX-OD4121**
		PNP		24 VDC		0.5 ms max./ 1.0 ms max.	**NX-OD4256**
	16 points	NPN		12 to 24 VDC		0.1 ms max./ 0.8 ms max.	**NX-OD5121**
		PNP		24 VDC		0.5 ms max./ 1.0 ms max.	**NX-OD5256**
	32 points	NPN	0.5 A/point, 4 A/terminal block, 8 A/Unit	12 to 24 VDC		0.1 ms max./ 0.8 ms max.	**NX-OD6121**
		PNP		24 VDC		0.5 ms max./ 1.0 ms max.	**NX-OD6256**
Transistor Output Unit  (M3 Screw Terminal Block, 30 mm Width)	16 points	NPN	0.5 A/point, 5 A/Unit	12 to 24 VDC	Switching Synchronous I/O refreshing and Free-Run refreshing	0.1 ms max./ 0.8 ms max.	**NX-OD5121-1**
		PNP		24 VDC		0.5 ms max./ 1.0 ms max.	**NX-OD5256-1**
Transistor Output Unit  (MIL Connector, 30 mm Width)	16 points	NPN	0.5 A/point, 2 A/Unit	12 to 24 VDC	Switching Synchronous I/O refreshing and Free-Run refreshing	0.1 ms max./ 0.8 ms max.	**NX-OD5121-5**
		PNP		24 VDC		0.5 ms max./ 1.0 ms max.	**NX-OD5256-5**
	32 points	NPN	0.5 A/point, 2 A/common, 4 A/Unit	12 to 24 VDC		0.1 ms max./ 0.8 ms max.	**NX-OD6121-5**
		PNP		24 VDC		0.5 ms max./ 1.0 ms max.	**NX-OD6256-5**
Transistor Output Unit  (Fujitsu/OTAX Connector, 30 mm Width)	32 points	NPN	0.5 A/point, 2 A/common, 4 A/Unit	12 to 24 VDC	Switching Synchronous I/O refreshing and Free-Run refreshing	0.1 ms max./ 0.8 ms max.	**NX-OD6121-6**
Relay Output Unit  (Screwless Clamping Terminal Block, 12 mm Width/24 mm Width)	2 points	N.O.	250 VAC/2 A ($\cos\phi$=1) 250 VAC/2 A ($\cos\phi$=0.4) 24 VDC/2 A 4 A/Unit		Free-Run refreshing	15 ms max./15 ms max.	**NX-OC2633**
		N.O.+N.C.					**NX-OC2733**
	8 points	N.O.	250 VAC/2 A ($\cos\phi$=1) 250 VAC/2 A ($\cos\phi$=0.4) 24 VDC/2 A 8 A/Unit		Free-Run refreshing	15 ms max./15 ms max.	**NX-OC4633**

* To use input refreshing with input changed time, the EtherCAT Coupler Unit with unit version 1.1 or later and the Sysmac Studio version 1.07 or higher are required.

Digital Mixed I/O Units

Product Name	Specification					Model
	Number of points	Internal I/O common	Maximum value of load current	I/O refreshing method	ON/OFF response time	
DC Input/Transistor Output Unit  (MIL Connector, 30 mm Width)	Outputs: 16 points Inputs: 16 points	Outputs: NPN Inputs: For both NPN/PNP	Outputs: 12 to 24 VDC Inputs: 24 VDC	Switching Synchronous I/O refreshing and Free-Run refreshing	Outputs: 0.1 ms max./0.8 ms max. Inputs: 20 µs max./400 µs max.	**NX-MD6121-5**
		Outputs: PNP Inputs: For both NPN/PNP	Outputs: 24 VDC Inputs: 24 VDC		Outputs: 0.5 ms max./1.0 ms max. Inputs: 20 µs max./400 µs max.	**NX-MD6256-5**
DC Input/Transistor Output Unit  (Fujitsu/OTAX Connector, 30 mm Width)	Outputs: 16 points Inputs: 16 points	Outputs: NPN Inputs: For both NPN/PNP	Outputs: 12 to 24 VDC Inputs: 24 VDC	Switching Synchronous I/O refreshing and Free-Run refreshing	Outputs: 0.1 ms max./0.8 ms max. Inputs: 20 µs max./400 µs max.	**NX-MD6121-6**

High-speed Analog Input Units

Product name	Specifications								Model
	Number of points	Input range	Resolution	Input method	Conversion time	Trigger input section		I/O refreshing method	
						Number of points	Internal I/O common		
High-speed Analog Input Unit 	4	-10 to 10 V -5 to 5 V 0 to 10 V 0 to 5 V 1 to 5 V 0 to 20 mA 4 to 20 mA	• Input range of -10 to 10 V or -5 to 5 V: 1/64,000 (full scale) • Other input range: 1/32,000 (full scale)	Differential input	5 µs per channel	4	NPN	Synchro-nous I/O refreshing	**NX-HAD401**
							PNP		**NX-HAD402**

Analog Input Units

Product Name	Specification									Model
	Number of points	Input range	Resolution	Conversion value, decimal number (0 to 100%)	Over all accuracy (25°C)	Input method	Conversion time	Input impedance	I/O refreshing method	
Voltage Input Unit 	2 points	-10 to +10 V	1/8000	-4000 to 4000	±0.2% (full scale)	Single-ended input	250 µs/ point	1 MΩ min.	Free-Run refreshing	**NX-AD2603**
						Differential Input				**NX-AD2604**
			1/30000	-15000 to 15000	±0.1% (full scale)	Differential Input	10 µs/ point		Selectable Synchronous I/O refreshing or Free-Run refreshing	**NX-AD2608**
	4 points		1/8000	-4000 to 4000	±0.2% (full scale)	Single-ended input	250 µs/ point		Free-Run refreshing	**NX-AD3603**
						Differential Input				**NX-AD3604**
			1/30000	-15000 to 15000	±0.1% (full scale)	Differential Input	10 µs/ point		Selectable Synchronous I/O refreshing or Free-Run refreshing	**NX-AD3608**
	8 points		1/8000	-4000 to 4000	±0.2% (full scale)	Single-ended input	250 µs/ point		Free-Run refreshing	**NX-AD4603**
						Differential Input				**NX-AD4604**
			1/30000	-15000 to 15000	±0.1% (full scale)	Differential Input	10 µs/ point		Selectable Synchronous I/O refreshing or Free-Run refreshing	**NX-AD4608**
Current Input Unit 	2 points	4 to 20 mA	1/8000	0 to 8000	±0.2% (full scale)	Single-ended input	250 µs/ point	250 Ω	Free-Run refreshing	**NX-AD2203**
						Differential Input				**NX-AD2204**
			1/30000	0 to 30000	±0.1% (full scale)	Differential Input	10 µs/ point		Selectable Synchronous I/O refreshing or Free-Run refreshing	**NX-AD2208**
	4 points		1/8000	0 to 8000	±0.2% (full scale)	Single-ended input	250 µs/ point		Free-Run refreshing	**NX-AD3203**
						Differential Input				**NX-AD3204**
			1/30000	0 to 30000	±0.1% (full scale)	Differential Input	10 µs/ point		Selectable Synchronous I/O refreshing or Free-Run refreshing	**NX-AD3208**
	8 points		1/8000	0 to 8000	±0.2% (full scale)	Single-ended input	250 µs/ point	85 Ω	Free-Run refreshing	**NX-AD4203**
						Differential Input				**NX-AD4204**
			1/30000	0 to 30000	±0.1% (full scale)	Differential Input	10 µs/ point		Selectable Synchronous I/O refreshing or Free-Run refreshing	**NX-AD4208**

Analog Output Units

Product Name	Specification							Model
	Number of points	Input range	Resolution	Output setting value, decimal number (0 to 100%)	Over all accuracy (25°C)	Conversion time	I/O refreshing method	
Voltage Output Unit 	2 points	-10 to +10 V	1/8000	-4000 to 4000	±0.3% (full scale)	250 µs/point	Free-Run refreshing	**NX-DA2603**
			1/30000	-15000 to 15000	±0.1% (full scale)	10 µs/point	Selectable Synchronous I/O refreshing or Free-Run refreshing	**NX-DA2605**
	4 points		1/8000	-4000 to 4000	±0.3% (full scale)	250 µs/point	Free-Run refreshing	**NX-DA3603**
			1/30000	-15000 to 15000	±0.1% (full scale)	10 µs/point	Selectable Synchronous I/O refreshing or Free-Run refreshing	**NX-DA3605**
Current Output Unit 	2 points	4 to 20 mA	1/8000	0 to 8000	±0.3% (full scale)	250 µs/point	Free-Run refreshing	**NX-DA2203**
			1/30000	0 to 30000	±0.1% (full scale)	10 µs/point	Selectable Synchronous I/O refreshing or Free-Run refreshing	**NX-DA2205**
	4 points		1/8000	0 to 8000	±0.3% (full scale)	250 µs/point	Free-Run refreshing	**NX-DA3203**
			1/30000	0 to 30000	±0.1% (full scale)	10 µs/point	Selectable Synchronous I/O refreshing or Free-Run refreshing	**NX-DA3205**

Temperature Control Units

Product name	Specifications								Model
	Number of channels	Input type	Output	Number of output points	Number of CT input points	Control type	Conversion time	I/O refreshing method	
Advanced Temperature Control Unit 	4	Universal input (thermocouple, resistance thermometer, analog voltage, analog current)	Voltage output (for driving SSR)	4	4	Heating/cooling control	50 ms	Free-Run refreshing	**NX-HTC3510-5**
			Linear current output						
	8		Voltage output (for driving SSR)	8	8	Standard control			**NX-HTC4505-5**
Temperature Control Unit 2-channel Type 	2	Universal input (thermocouple, resistance thermometer)	Voltage output (for driving SSR)	2	2	Standard control			**NX-TC2405**
					None	Standard control			**NX-TC2406**
			Voltage output (for driving SSR)	4	None	Heating/cooling control			**NX-TC2407**
			Linear current output	2	None	Standard control			**NX-TC2408**
Temperature Control Unit 4-channel Type 	4		Voltage output (for driving SSR)	4	4	Standard control			**NX-TC3405**
					None	Standard control			**NX-TC3406**
			Voltage output (for driving SSR)	8	None	Heating/cooling control			**NX-TC3407**
			Linear current output	4	None	Standard control			**NX-TC3408**

Temperature Input Units

Product Name	Specification							Model
	Number of points	Input type	Resolution (25°C)	Over all accuracy (25°C)	Conversion time	I/O refreshing method	Terminals	
Thermocouple Input type 	2 points	Thermocouple	0.1°C max. *1	Refer to your OMRON website for details.	250 ms/Unit	Free-Run refreshing	16 Terminals	**NX-TS2101**
	4 points						16 Terminals x 2	**NX-TS3101**
	2 points		0.01°C max.		10 ms/Unit		16 Terminals	**NX-TS2102**
	4 points						16 Terminals x 2	**NX-TS3102**
	2 points		0.001°C max.		60 ms/Unit		16 Terminals	**NX-TS2104**
	4 points						16 Terminals x 2	**NX-TS3104**
Resistance Thermometer Input type 	2 points	Resistance Thermometer (Pt100/Pt1000, three-wire) *2	0.1°C max.		250 ms/Unit		16 Terminals	**NX-TS2201**
	4 points						16 Terminals x 2	**NX-TS3201**
	2 points		0.01°C max.		10 ms/Unit		16 Terminals	**NX-TS2202**
	4 points						16 Terminals x 2	**NX-TS3202**
	2 points		0.001°C max.		60 ms/Unit		16 Terminals	**NX-TS2204**
	4 points						16 Terminals x 2	**NX-TS3204**

*1. The resolution is 0.2°C max. when the input type is R, S, or W.
*2. The NX-TS2202 and NX-TS3202 only supports Pt100 three-wire sensor.

Heater Burnout Detection Units

Product Name	Specification							Model
	CT input section		Control output section					
	Number of inputs	Maximum heater current	Number of outputs	Internal I/O common	Maximum load current	Rated voltage	I/O refreshing method	
Heater Burnout Detection Unit 	4	50 AAC	4	NPN	0.1 A/point, 0.4 A/Unit	12 to 24 VDC	Free-Run refreshing	NX-HB3101
				PNP		24 VDC		NX-HB3201

Load Cell Input Unit

Product Name	Specification					Model
	Number of Model Standards points	Conversion cycle	I/O refreshing method *	Load cell excitation voltage	Input range	
Load Cell Input Unit 	1	125 µs	• Free-Run refreshing • Synchronous I/O refreshing • Task period prioritized refreshing	5 VDC ± 10%	-5.0 to 5.0 mV/V	NX-RS1201

* Refer to the *NX-series Load Cell Input Unit User's Manual* (W565) for detailed information on I/O refresh cycle.

Position interface: Incremental Encoder Input Units

Product Name	Specification					Model
	Number of channels	External inputs	Maximum response frequency	I/O refreshing method	Number of I/O entry mappings	
Incremental Encoder Input Unit 	1 (NPN)	3 (NPN)	500 kHz	• Free-Run refreshing • Synchronous I/O refreshing	1/1	NX-EC0112
	1 (PNP)	3 (PNP)				NX-EC0122
	1	3 (NPN)	4 MHz			NX-EC0132
		3 (PNP)				NX-EC0142
	2 (NPN)	None	500 kHz		2/2	NX-EC0212
	2 (PNP)					NX-EC0222

Position interface: SSI Input Units

Product Name	Specification					Model
	Number of channels	Input/Output form	Maximum data length	Encoder power supply	Type of external connections	
SSI Input Unit 	1	EIA standard RS-422-A	32 bits	24 VDC, 0.3 A/CH	Screwless push-in terminal block (12 terminals)	NX-ECS112
	2	EIA standard RS-422-A	32 bits	24 VDC, 0.3 A/CH	Screwless push-in terminal block (12 terminals)	NX-ECS212

Position interface: Pulse Output Units

Product Name	Specification							Model
	Number of channels *1	External inputs	External outputs	Maximum pulse output speed	I/O refreshing method	Number of I/O entry mappings	Control output interface	
Pulse Output Unit 	1 (NPN)	2 (NPN)	1 (NPN)	500 kpps	• Synchronous I/O refreshing • Task period prioritized refreshing *2	1/1	Open collector output	NX-PG0112
	1 (PNP)	2 (PNP)	1 (PNP)					NX-PG0122
	2	5 inputs/CH (NPN)	3 outputs/CH (NPN)	4 Mpps		2/2	Line driver output	NX-PG0232-5
		5 inputs/CH (PNP)	3 outputs/CH (PNP)					NX-PG0242-5
	4	5 inputs/CH (NPN)	3 outputs/CH (NPN)			4/4		NX-PG0332-5
		5 inputs/CH (PNP)	3 outputs/CH (PNP)					NX-PG0342-5

*1. This is the number of pulse output channels.
*2. Unit version 1.2 or later and an NX-ECC203 EtherCAT Coupler Unit are required.

EtherCAT Slave Unit

Product name	Specifications		Model
	Send/receive PDO data sizes *1	Refreshing method	
EtherCAT Slave Unit 	″ Data input by the EtherCAT master (TxPDOs) 1,204 bytes max. ″ Data output by the EtherCAT master (RxPDOs) 1,200 bytes max.	Free-Run Mode	NX-ECT101

*1. The following shows the contents of the TxPDO data.
• I/O data set from the CPU Unit to the EtherCAT master: 1,200 bytes or less
• Status to notify the EtherCAT master: 4 bytes or less

Communications Interface Units

Product Name	Serial interface	External connection terminals	Number of serial ports	Communications protocol	Model
Communications Interface Unit 	RS-232C	Screwless Clamping Terminal Block	1 port	• No-protocol • Signal lines	NX-CIF101
	RS-422A/485				NX-CIF105
	RS-232C	D-Sub connector	2 ports		NX-CIF210

RFID Units

Product name	Amplifier/Antenna	No. of unit numbers used	Model
RFID Unit (1Ch) 	V680 series	1	NX-V680C1
RFID Unit (2Ch) 		2	NX-V680C2

IO-Link Master Unit

Product Name	Specification			Model
	Number of IO-Link ports	I/O refreshing method	I/O connection terminals	
IO-Link Master Unit 	4	Free-Run refreshing	Screwless clamping terminal block	**NX-ILM400**

System Units

Product Name	Specification	Model
Additional NX Unit Power Supply Unit 	Power supply voltage: 24 VDC (20.4 to 28.8 VDC) NX Bus power supply capacity: 10 W max.	**NX-PD1000**
Additional I/O Power Supply Unit 	Power supply voltage: 5 to 24 VDC (4.5 to 28.8 VDC) I/O power feed maximum current: 4 A	**NX-PF0630**
	Power supply voltage: 5 to 24 VDC (4.5 to 28.8 VDC) I/O power feed maximum current: 10 A *	**NX-PF0730**
I/O Power Supply Connection Unit 	Number of I/O power terminals: IOG: 16 terminals Current capacity of I/O power terminal: 4 A/terminal max.	**NX-PC0010**
	Number of I/O power terminals: IOV: 16 terminals Current capacity of I/O power terminal: 4 A/terminal max.	**NX-PC0020**
	Number of I/O power terminals: IOV: 8 terminals, IOG: 8 terminals Current capacity of I/O power terminal: 4 A/terminal max	**NX-PC0030**
Shield Connection Unit 	Number of shield terminals: 14 terminals (The following two terminals are functional ground terminals.)	**NX-TBX01**

EtherNet/IP Coupler Unit

Product name	Current consumption	Maximum I/O power supply current	Model
EtherNet/IP Coupler Unit *1 	1.60 W or lower	10 A	**NX-EIC202**

*1. One End Cover NX-END01 is provided with the EtherCAT Coupler Unit.

EtherCAT Coupler Units

NX-series Units on previous pages and NX-series Safety Units can be used by connecting to the EtherCAT Coupler Unit that is connected to the built-in EtherCAT port on the NX7 CPU Unit.

Product Name	Communications cycle in DC Mode	Current consumption	Maximum I/O power supply current	Model
EtherCAT Coupler Unit *1 	250 to 4000 μs *2	1.45 W max.	4 A	**NX-ECC201**
	250 to 4000 μs *2		10 A	**NX-ECC202**
	125 to 10000 μs *2	1.25 W max.		**NX-ECC203**

*1. One End Cover NX-END01 is provided with the EtherCAT Coupler Unit.
*2. This depends on the specifications of the EtherCAT master. For example, the values are as follows when the EtherCAT Coupler Unit is connected to the built-in EtherCAT port on an NJ5-series CPU Unit: 500 μs, 1,000 μs, 2,000 μs, and 4,000 μs. Refer to the *NJ/NX-series CPU Unit Built-in EtherCAT Port User' Manual* (Cat. No. W505) for the specifications of the built-in EtherCAT ports on NJ/NX-series CPU Units. This also depends on the unit configuration.

Safety CPU Units

Appearance	Specification					Model
	Maximum number of safety I/O points	Program capacity	Number of safety master connections	I/O refreshing method	Unit version	
	256 points	512 KB	32	Free-Run refreshing	Ver.1.1	**NX-SL3300**
	1024 points	2048 KB	128	Free-Run refreshing	Ver.1.1	**NX-SL3500**

Safety Input Units

Appearance	Specification								Model
	Number of safety input points	Number of test output points	Internal I/O common	Rated input voltage	OMRON special safety input devices	Number of safety slave connections	I/O refreshing method	Unit version	
	4 points	2 points	Sinking inputs (PNP)	24 VDC	Can be connected.	1	Free-Run refreshing	Ver.1.1	**NX-SIH400**
	8 points	2 points	Sinking inputs (PNP)	24 VDC	Cannot be connected.	1	Free-Run refreshing	Ver.1.0	**NX-SID800**

Safety Output Units

Appearance	Specification							Model
	Number of Model safety output points	Internal I/O common	Maximum load current	Rated voltage	Number of safety slave connections	I/O refreshing method	Unit version	
	2 points	Sourcing outputs (PNP)	2.0 A/point, 4.0 A/Unit at 40°C, and 2.5A/Unit at 55°C The maximum load current depends on the installation orientation and ambient temperature.	24 VDC	1	Free-Run refreshing	Ver.1.0	**NX-SOH200**
	4 points	Sourcing outputs (PNP)	0.5 A/point and 2.0 A/Unit	24 VDC	1	Free-Run refreshing	Ver.1.0	**NX-SOD400**

General Specifications

Item		Specification
Enclosure		Mounted in a panel
Grounding Method		Ground to less than 100 Ω
Dimensions (height×depth×width)		100 mm × 100 mm × 132 mm
Weight		880 g (including the End Cover)
Power consumption		40 W (including SD Memory Card and End Cover)
Operation Environment	**Ambient Operating Temperature**	0 to 55°C
	Ambient Operating Humidity	10% to 95% (with no condensation)
	Atmosphere	Must be free from corrosive gases.
	Ambient Storage Temperature	-25 to 70°C (excluding battery and fan unit)
	Altitude	2,000 m or less
	Pollution Degree	2 or less: Meets IEC 61010-2-201.
	Noise Immunity	2 kV on power supply line (Conforms to IEC 61000-4-4.)
	Overvoltage Category	Category II: Meets IEC 61010-2-201.
	EMC Immunity Level	Zone B
	Vibration Resistance	Conforms to IEC 60068-2-6. 5 to 8.4 Hz with 3.5-mm amplitude, 8.4 to 150 Hz Acceleration of 9.8 m/s^2 for 100 min in X, Y, and Z directions (10 sweeps of 10 min each = 100 min total)
	Shock Resistance	Conforms to IEC 60068-2-27. 147 m/s^2, 3 times in X, Y, and Z directions (100 m/s^2 for Relay Output Units)
Battery	**Life**	2.5 years (at 25°C, Power ON time rate 0% (power OFF))
	Model	CJ1W-BAT01
Applicable Standards *1		cULus, EU, UKCA, RCM, KC, NK, LR

*1. Refer to the OMRON website (http://www.ia.omron.com/) or consult your OMRON representative for the most recent applicable standards for each model.

Performance Specifications

Item				NX701-	
				17□0	16□0
Processing Time	Instruction Execution Times	LD instruction		0.37 ns or more	
		Math Instructions (for Long Real Data)		3.2 ns or more	
Programming	Program capacity *1	Size		80 MB (1600 KS)	
		Number	POU definition	6,000	
			POU instance	48,000	
	Variables capacity	No Retain Attribute *2	Size	256 MB	
			Number	360,000	
		Retain Attribute *3	Size	4 MB	
			Number	40,000	
	Data type	Number		8,000	
	Memory for CJ-Series Units (Can be Specified with AT Specifications for Variables.)	CIO Area		NX701-1□00: --- NX701-1□20: 6144 words (CIO 0 to CIO 6143) *4	
		Work Area		NX701-1□00: --- NX701-1□20: 512 words (W0 to W511) *4	
		Holding Area		NX701-1□00: --- NX701-1□20: 1536 words (H0 to H1535) *5	
		DM Area		NX701-1□00: --- NX701-1□20: 32768 words (D0 to D32767) *5	
		EM Area		NX701-1□00: --- NX701-1□20: 32768 words × 25 banks (E0_00000 to E18_32767) *6	
Unit Configuration	Maximum Number of Connectable Units	Maximum number of NX unit on the system		4,096 (on NX series EtherCAT slave terminal)	
	Maximum number of Expansion Racks			0	
	Power Supply Unit for CPU Rack and Expansion Racks	Model		NX-PA9001 NX-PD7001	
		Power OFF Detection Time	AC Power Supply	30 to 45 ms	
			DC Power Supply	5 to 20ms	
Motion Control	Number of Controlled Axes	Maximum Number of Controlled Axes		Maximum number of axes which can be defined.	
				256 axes	128 axes
		Motion control axes		Maximum number of motion control axes which can be defined. All motion control function is available.	
				256 axes	128 axes
		Maximum number of used real axes		Maximum number of used real axes. The Number of used real axes includes following servo axes and encoder axes.	
				256 axes	128 axes
		Used motion control servo axes		Maximum number of servo axes which all motion control function is available.	
				256 axes	128 axes
		Maximum number of axes for linear interpolation axis control		4 axes per axes group	
		Number of axes for circular interpolation axis control		2 axes per axes group	
	Maximum Number of Axes Groups			64 groups	
	Motion Control Period			The same control period as that is used for the process data communications cycle for EtherCAT.	
	Cams	Number of Cam Data Points	Maximum Points per Cam Table	65,535 points	
			Maximum Points for All Cam Tables	1,048,560 points	
		Maximum Number of Cam Tables		640 tables	
	Position Units			Pulses, millimeters, micrometers, nanometers, degrees or inches	
	Override Factors			0.00% or 0.01% to 500.00%	

*1. This is the capacity for the execution objects and variable tables (including variable names).
*2. Words for CJ-series Units in the Holding, DM, and EM Areas are not included. For NX701-1□20, Words for CJ-series Units are included.
*3. Words for CJ-series Units in the CIO and Work Areas are not included. For NX701-1□20, Words for CJ-series Units are included.
*4. You can set the size in 1ch unit. Use Non-Retain attribute memory.
*5. You can set the size in 1ch unit. Use Retain attribute memory.
*6. NX701-1□20 use the dedicated area for the spool function. Even if the spool function is valid, Retain attribute memory is not used.

Item				NX701-	
				17□0	16□0
Built-in EtherNet/IP Port	Number of port			2	
	Physical Layer			10BASE-T/100BASE-TX /1000BASE-T	
	Frame length			1514 max.	
	Media Access Method			CSMA/CD	
	Modulation			Baseband	
	Topology			Star	
	Baud Rate			1Gbps (1000BASE-T)	
	Transmission Media			STP (shielded, twisted-pair) cable of Ethernet category 5, 5e or higher	
	Maximum Transmission Distance between Ethernet Switch and Node			100m	
	Maximum Number of Cascade Connections			There are no restrictions if Ethernet switch is used.	
	CIP service: Tag Data Links (Cyclic Communications)	Maximum Number of Connections		256 / port total 512	
		Packet interval *7		0.5 to 10,000 ms in 0.5-ms increments Can be set for each connection.	
		Permissible Communications Band		40,000 pps *8 including heartbeat	
		Maximum Number of Tag Sets		256 / port total 512	
		Tag types		Network variables	
		Number of tags per connection (i.e., per tag set)		8 (7 tags if Controller status is included in the tag set.)	
		Maximum Link Data Size per Node (total size for all tags)		256 / port total 512	
		Maximum number of tag		369,664 byte (Total in 2 ports 739,328 byte)	
		Maximum Data Size per Connection		1,444 byte	
		Maximum Number of Registrable Tag Sets		256 / port total 512 (1 connection = 1 tag set)	
		Maximum Tag Set Size		1,444 bytes (Two bytes are used if Controller status is included in the tag set.)	
		Multi-cast Packet Filter *9		Supported.	
	Cip Message Service: Explicit Messages	Class 3 (number of connections)		128 / port total 256 (clients plus server)	
		UCMM (non-connection type)	Maximum Number of Clients that Can Communicate at One Time	32 / port total 64	
			Maximum Number of Servers that Can Communicate at One Time	32 / port total 64	
	Maximum number of TCP socket service			30	

*7. Data is updated on the line in the specified interval regardless of the number of nodes.
*8. Means packets per second, i.e., the number of communications packets that can be sent or received in one second.
*9. An IGMP client is mounted for the EtherNet/IP port. If an ethernet switch that supports IGMP snooping is used, filtering of unnecessary multicast packets is performed.

Item				NX701-	
				17□0	16□0
Built-in EtherNet/IP Port	OPC UA Server	Support Profile/Model		Embedded 2017 UA Server Profile PLCopen Information Model 1.00	
		Default Endpoint/Port		opc.tcp://192.168.250.1:4840/	
		Maximum number of sessions (Client)		5	
		Maximum number of Monitored Items per server		20,000	
		Sampling rate of the Monitored Items (ms)		0, 50, 100, 250, 500, 1000,2000, 5000, 10000 if set to 0 (zero), it is assumed that is set to 50.	
		Maximum number of Subscriptions per server		100	
		Maximum number of variables that can be published		100,000	
		Maximum number of structure definitions that can be published		100	
		Restrictions on variables unable to be published		• Variable which size are over 60 KB • Double and over dimensional array of structures (global variables) • Structures includes double and over dimensional array (global variables) • Structures nested 4 and over Unions • Array which's index number don't start from 0 • Array which's element is over 2048 (global variables) • Structures which's members are over 100.	
		SecurityPolicy/Mode		• None • Sign - Basic128Rsa15 • Sign - Basic256 • Sign - Basic256Sha256 • Sign - Aes128Sha256RsaOaep • Sign - Aes256Sha256RsaPss • SignAndEncrypt - Basic128Rsa15 • SignAndEncrypt - Basic256 • SignAndEncrypt - Basic256Sha256 • SignAndEncrypt - Aes128Sha256RsaOaep • SignAndEncrypt - Aes256Sha256RsaPss	
		Application Authentication	Authentication	X.509	
			Maximum number of certification	Trusted certification: 32 Issuer certification: 32 Rejected certification: 32	
		User Authentication	Authentication	User name / Password / Role *10 Anonymous	
Built-in EtherCAT Port	Communications Standard			IEC 61158 Type12	
	EtherCAT Master Specifications			Class B (Feature Pack Motion Control compliant)	
	Physical Layer			100BASE-TX	
	Modulation			Baseband	
	Baud Rate			100 Mbps (100Base-TX)	
	Duplex mode			Auto	
	Topology			Line, daisy chain, and branching	
	Transmission Media			Twisted-pair cable of category 5 or higher (double-shielded straight cable with aluminum tape and braiding)	
	Maximum Transmission Distance between Nodes			100m	
	Maximum Number of Slaves			512	
	Range of node address			1-512	
	Maximum Process Data Size			Inputs: 11,472 bytes Outputs: 11,472 bytes *11	
	Maximum Process Data Size per Slave			Inputs: 1,434 bytes Outputs: 1,434 bytes	
	Communications Cycle			• Primary periodic task: 125 μs, 250 μs to 8 ms (in 250-μs increments) • Priority-5 periodic task: 125 μs, 250 μs to 100 ms (in 250-μs increments)	
	Sync Jitter			1 μs max.	
Internal Clock				At ambient temperature of 55°C: -4.5 to +4.5 min error per month At ambient temperature of 25°C: -3.5 to +3.5 min error per month At ambient temperature of 0°C: -4.5 to +4.5 min error per month	

*10.Roles can be set for the unit versions 1.34 or later of CPU Units.
*11.The data must be within eight frames.

Function Specifications

Item				NX701-□□□□
Tasks	Function			I/O refreshing and the user program are executed in units that are called tasks. Tasks are used to specify execution conditions and execution priority.
		Periodically Executed Tasks	Maximum Number of Primary Periodic Tasks	1
			Maximum Number of Periodic Tasks	4
		Conditionally executed tasks	Maximum number of event tasks	32
			Execution conditions	When Activate Event Task instruction is executed or when condition expression for variable is met.
Programming	POU (program organization units)	Programs		POUs that are assigned to tasks.
		Function Blocks		POUs that are used to create objects with specific conditions.
		Functions		POUs that are used to create an object that determine unique outputs for the inputs, such as for data processing.
	Programming Languages	Types		Ladder diagrams *1 and structured text (ST)
	Namespaces			A concept that is used to group identifiers for POU definitions.
	Variables	External Access of Variables	Network Variables	The function which allows access from the HMI, host computers, or other Controllers
	Data Types	Data Types	Boolean	BOOL
			Bit Strings	BYTE, WORD, DWORD, LWORD
			Integers	INT, SINT, DINT,LINT, UINT, USINT, UDINT, ULINT
			Real Numbers	REAL, LREAL
			Durations	TIME
			Dates	DATE
			Times of Day	TIME_OF_DAY
			Date and Time	DATE_AND_TIME
			Text Strings	STRING
		Derivative Data Types		Structures, unions, enumerations
		Structures	Function	A derivative data type that groups together data with different variable types.
			Maximum Number of Members	2048
			Nesting Maximum Levels	8
			Member Data Types	Basic data types, structures, unions, enumerations, array variables
			Specifying Member Offsets	You can use member offsets to place structure members at any memory locations.
		Unions	Function	A derivative data type that groups together data with different variable types.
			Maximum Number of Members	4
			Member Data Types	BOOL, BYTE, WORD, DWORD, LWORD
		Enumerations	Function	A derivative data type that uses text strings called enumerators to express variable values.
	Data Type Attributes	Array Specifications	Function	An array is a group of elements with the same data type. You specify the number (subscript) of the element from the first element to specify the element.
			Maximum Number of Dimensions	3
			Maximum Number of Elements	65535
			Array Specifications for FB Instances	Supported.
		Range Specifications		You can specify a range for a data type in advance. The data type can take only values that are in the specified range.
		Libraries		User libraries

*1. Inline ST is supported. (Inline ST is ST that is written as an element in a ladder diagram.)

Item				NX701-□□□□
Motion Control	Control Modes			position control, velocity control, torque control
	Axis Types			Servo axes, virtual servo axes, encoder axes, and virtual encoder axes
	Positions that can be managed			Command positions and actual positions
	Single-axis	Single-axis Position Control	Absolute Positioning	Positioning is performed for a target position that is specified with an absolute value.
			Relative Positioning	Positioning is performed for a specified travel distance from the command current position.
			Interrupt Feeding	Positioning is performed for a specified travel distance from the position where an interrupt input was received from an external input.
			Cyclic synchronous absolute positioning	The function which outputs command positions in every control period in the position control mode.
		Single-axis Velocity Control	Velocity Control	Velocity control is performed in Position Control Mode.
			Cyclic Synchronous Velocity Control	A velocity command is output each control period in Velocity Control Mode.
		Single-axis Torque Control	Torque Control	The torque of the motor is controlled.
		Single-axis Synchronized Control	Starting Cam Operation	A cam motion is performed using the specified cam table.
			Ending Cam Operation	The cam motion for the axis that is specified with the input parameter is ended.
			Starting Gear Operation	A gear motion with the specified gear ratio is performed between a master axis and slave axis.
			Positioning Gear Operation	A gear motion with the specified gear ratio and sync position is performed between a master axis and slave axis.
			Ending Gear Operation	The specified gear motion or positioning gear motion is ended.
			Synchronous Positioning	Positioning is performed in sync with a specified master axis.
			Master Axis Phase Shift	The phase of a master axis in synchronized control is shifted.
			Combining Axes	The command positions of two axes are added or subtracted and the result is output as the command position.
		Single-axis Manual Operation	Powering the Servo	The Servo in the Servo Drive is turned ON to enable axis motion.
			Jogging	An axis is jogged at a specified target velocity.
		Auxiliary Functions for Single-axis Control	Resetting Axis Errors	Axes errors are cleared.
			Homing	A motor is operated and the limit signals, home proximity signal, and home signal are used to define home.
			Homing with parameter	Specifying the parameter, a motor is operated and the limit signals, home proximity signal, and home signal are used to define home.
			High-speed Homing	Positioning is performed for an absolute target position of 0 to return to home.
			Stopping	An axis is decelerated to a stop at the specified rate.
			Immediately Stopping	An axis is stopped immediately.
			Setting Override Factors	The target velocity of an axis can be changed.
			Changing the Current Position	The command current position or actual current position of an axis can be changed to any position.
			Enabling External Latches	The position of an axis is recorded when a trigger occurs.
			Disabling External Latches	The current latch is disabled.
			Zone Monitoring	You can monitor the command position or actual position of an axis to see when it is within a specified range (zone).
			Enabling digital cam switches	You can turn a digital output ON and OFF according to the position of an axis.
			Monitoring Axis Following Error	You can monitor whether the difference between the command positions or actual positions of two specified axes exceeds a threshold value.
			Resetting the Following Error	The error between the command current position and actual current position is set to 0.
			Torque Limit	The torque control function of the Servo Drive can be enabled or disabled and the torque limits can be set to control the output torque.
			Slave Axis Position Compensation	This function compensates the position of the slave axis currently in synchronized control.
			Cam monitor	Outputs the specified offset position for the slave axis in synchronous control.
			Start velocity	You can set the initial velocity when axis motion starts.

Item				NX701-□□□□
Motion Control	Axes Groups	Multi-axes Coordinated Control	Absolute Linear Interpolation	Linear interpolation is performed to a specified absolute position.
			Relative Linear Interpolation	Linear interpolation is performed to a specified relative position.
			Circular 2D Interpolation	Circular interpolation is performed for two axes.
			Axes Group Cyclic Synchronous Absolute Positioning	A positioning command is output each control period in Position Control Mode.
		Auxiliary Functions for Multi-axes Coordinated Control	Resetting Axes Group Errors	Axes group errors and axis errors are cleared.
			Enabling Axes Groups	Motion of an axes group is enabled.
			Disabling Axes Groups	Motion of an axes group is disabled.
			Stopping Axes Groups	All axes in interpolated motion are decelerated to a stop.
			Immediately Stopping Axes Groups	All axes in interpolated motion are stopped immediately.
			Setting Axes Group Override Factors	The blended target velocity is changed during interpolated motion.
			Reading Axes Group Positions	The command current positions and actual current positions of an axes group can be read.
			Changing the Axes in an Axes Group	The Composition Axes parameter in the axes group parameters can be overwritten temporarily.
	Common Items	Cams	Setting Cam Table Properties	The end point index of the cam table that is specified in the input parameter is changed.
			Saving Cam Tables	The cam table that is specified with the input parameter is saved in non-volatile memory in the CPU Unit.
			Generating cam tables	The cam table that is specified with the input parameter is generated from the cam property and cam node.
		Parameters	Writing MC Settings	Some of the axis parameters or axes group parameters are overwritten temporarily.
			Changing axis parameters	You can access and change the axis parameters from the user program.
	Auxiliary Functions	Count Modes		You can select either Linear Mode (finite length) or Rotary Mode (infinite length).
		Unit Conversions		You can set the display unit for each axis according to the machine.
		Acceleration/ Deceleration Control	Automatic Acceleration/ Deceleration Control	Jerk is set for the acceleration/deceleration curve for an axis motion or axes group motion.
			Changing the Acceleration and Deceleration Rates	You can change the acceleration or deceleration rate even during acceleration or deceleration.
		In-position Check		You can set an in-position range and in-position check time to confirm when positioning is completed.
		Stop Method		You can set the stop method to the immediate stop input signal or limit input signal.
		Re-execution of Motion Control Instructions		You can change the input variables for a motion control instruction during execution and execute the instruction again to change the target values during operation.
		Multi-execution of Motion Control Instructions (Buffer Mode)		You can specify when to start execution and how to connect the velocities between operations when another motion control instruction is executed during operation.
		Continuous Axes Group Motions (Transition Mode)		You can specify the Transition Mode for multi-execution of instructions for axes group operation.
		Monitoring Functions	Software Limits	Software limits are set for each axis.
			Following Error	The error between the command current value and the actual current value is monitored for an axis.
			Velocity, Acceleration Rate, Deceleration Rate, Torque, Interpolation Velocity, Interpolation Acceleration Rate, And Interpolation Deceleration Rate	You can set and monitor warning values for each axis and each axes group.
		Absolute Encoder Support		You can use an OMRON G5-Series or 1S-Series Servomotor with an Absolute Encoder to eliminate the need to perform homing at startup.
		Input signal logic inversion		You can inverse the logic of immediate stop input signal, positive limit input signal, negative limit input signal, or home proximity input signal.
	External Interface Signals			The Servo Drive input signals listed on the right are used. Home signal, home proximity signal, positive limit signal, negative limit signal, immediate stop signal, and interrupt input signal
Unit (I/O) Management	EtherCAT Slaves	Maximum Number of Slaves		512

Item				NX701-□□□□
Communications	Secure Communications			Function for secure communication with support software
	Built-in EtherNet/IP port Internal Port	Communications protocol		TCP/IP, UDP/IP
		CIP Communications Service	Tag Data Links	Programless cyclic data exchange is performed with the devices on the EtherNet/IP network.
			Message Communications	CIP commands are sent to or received from the devices on the EtherNet/IP network.
		TCP/IP functions	CIDR	The function which performs IP address allocations without using a class (class A to C) of IP address.
			IP Forwarding	The function which forward IP packets between interfaces.
		TCP/IP Applications	Socket Services	Data is sent to and received from any node on Ethernet using the UDP or TCP protocol. Socket communications instructions are used.
			FTP client	File can be read from or written to computers at other Ethernet nodes from the CPU Unit. FTP client communications instructions are used.
			FTP Server	Files can be read from or written to the SD Memory Card in the CPU Unit from computers at other Ethernet nodes.
			Automatic Clock Adjustment	Clock information is read from the NTP server at the specified time or at a specified interval after the power supply to the CPU Unit is turned ON. The internal clock time in the CPU Unit is updated with the read time.
			SNMP Agent	Built-in EtherNet/IP port internal status information is provided to network management software that uses an SNMP manager.
		OPC UA	Server Function	Functions to respond to requests from clients on the OPC UA network
	EtherCAT Port	Supported Services	Process Data Communications	Control information is exchanged in cyclic communications between the EtherCAT master and slaves.
			SDO Communications	A communications method to exchange control information in noncyclic event communications between EtherCAT master and slaves. This communications method is defined by CoE.
		Network Scanning		Information is read from connected slave devices and the slave configuration is automatically generated.
		DC (Distributed Clock)		Time is synchronized by sharing the EtherCAT system time among all EtherCAT devices (including the master).
		Packet Monitoring		The frames that are sent by the master and the frames that are received by the master can be saved.The data that is saved can be viewed with WireShark or other applications.
		Enable/disable Settings for Slaves		The slaves can be enabled or disabled as communications targets.
		Disconnecting/Connecting Slaves		Temporarily disconnects a slave from the EtherCAT network for maintenance, such as for replacement of the slave, and then connects the slave again.
		Supported Application Protocol	CoE	SDO messages of the CAN application can be sent to slaves via EtherCAT.
	Communications Instructions			The following instructions are supported. CIP communications instructions, socket communications instructions, SDO message instructions, no-protocol communications instructions *2, FTP client instructions, and Modbus RTU protcol instructions *2
Operation Management	RUN Output Contacts			The output on the Power Supply Unit turns ON in RUN mode.
System Management	Event Logs	Function		Events are recorded in the logs.
		Maximum number of events	System event log	2,048
			Access event log	1,024
			User-defined event log	1,024

*2. Supported only by the CPU Units with unit version 1.11 or later.

Item				NX701-□□□□
Debugging	Online Editing	Single		Programs, function blocks, functions, and global variables can be changed online. Different operators can change different POUs across a network.
	Forced Refreshing			The user can force specific variables to TRUE or FALSE.
		Maximum Number of Forced Variables	Device Variables for EtherCAT Slaves	64
	MC Test Run			Motor operation and wiring can be checked from the Sysmac Studio.
	Synchronizing			The project file in the Sysmac Studio and the data in the CPU Unit can be made the same when online.
	Differentiation monitoring			Rising/falling edge of contacts can be monitored.
		Maximum number of contacts		8
	Data Tracing	Types	Single Triggered Trace	When the trigger condition is met, the specified number of samples are taken and then tracing stops automatically.
			Continuous Trace	Data tracing is executed continuously and the trace data is collected by the Sysmac Studio.
		Maximum Number of Simultaneous Data Trace		4
		Maximum Number of Records		10,000
		Sampling	Maximum Number of Sampled Variables	192 variables
		Timing of Sampling		Sampling is performed for the specified task period, at the specified time, or when a sampling instruction is executed.
		Triggered Traces		Trigger conditions are set to record data before and after an event.
			Trigger Conditions	When BOOL variable changes to TRUE or FALSE Comparison of non-BOOL variable with a constant Comparison Method: Equals (=), Greater than (>), Greater than or equals (≥), Less Than (<), Less than or equals (≤), Not equal (≠)
			Delay	Trigger position setting: A slider is used to set the percentage of sampling before and after the trigger condition is met.
	Simulation			The operation of the CPU Unit is emulated in the Sysmac Studio.
Reliability Functions	Self-diagnosis	Controller Errors	Levels	Major fault, partial fault, minor fault, observation, and information
		User-defined errors		User-defined errors are registered in advance and then records are created by executing instructions.
			Levels	8 levels
Security	Protecting Software Assets and Preventing Operating Mistakes	CPU Unit Names and Serial IDs		When going online to a CPU Unit from the Sysmac Studio, the CPU Unit name in the project is compared to the name of the CPU Unit being connected to.
		Protection	User Program Transfer with No Restoration Information	You can prevent reading data in the CPU Unit from the Sysmac Studio.
			CPU Unit Write Protection	You can prevent writing data to the CPU Unit from the Sysmac Studio or SD Memory Card.
			Overall Project File Protection	You can use passwords to protect .smc files from unauthorized opening on the Sysmac Studio.
			Data Protection	You can use passwords to protect POUs on the Sysmac Studio.
		Verification of Operation Authority		Online operations can be restricted by operation rights to prevent damage to equipment or injuries that may be caused by operating mistakes.
			Number of Groups	5
		User Authentication		This function authenticates each user when Sysmac Studio is going online with the Controller and restricts operation according to the user's privileges.
			Number of Groups	5
		Verification of User Program Execution ID		The user program cannot be executed without entering a user program execution ID from the Sysmac Studio for the specific hardware (CPU Unit).
SD Memory Card Functions	Storage Type			SD Memory Card, SDHC Memory Card
	Application	Automatic transfer from SD Memory Card		The data in the autoload folder on an SD Memory Card is automatically loaded when the power supply to the Controller is turned ON.
		Transfer program from SD Memory Card *2		The user program on an SD Memory Card is loaded when the user changes system-defined variable to TRUE.
		SD Memory Card Operation Instructions		You can access SD Memory Cards from instructions in the user program.
		File Operations from the Sysmac Studio		You can perform file operations for Controller files in the SD Memory Card and read/write standard document files on the computer.
		SD Memory Card Life Expiration Detection		Notification of the expiration of the life of the SD Memory Card is provided in a systemdefined variable and event log.

*2. Supported only by the CPU Units with unit version 1.11 or later.

Item				NX701-□□□□
Backup functions	SD Memory Card backup functions	Operation	Using front switch	You can use front switch to backup, compare, or restore data.
			Using system-defined variables	You can use system-defined variables to backup, compare, or restore data. *3
			Memory Card Operations Dialog Box on Sysmac Studio	Backup and verification operations can be performed from the SD Memory Card Operations Dialog Box on the Sysmac Studio.
			Using instruction	Backup operation can be performed by using instruction.
		Protection	Prohibiting backing up data to the SD Memory Card	Prohibit SD Memory Card backup functions.
	Sysmac Studio Controller backup functions			Backup, restore, and verification operations for Units can be performed from the Sysmac Studio.

*3. Restore is supported with unit version 1.14 or later.

Function Specifications of Database Connection CPU Units

Besides functions of the NX701-□□□□, functions supported by the NX701-1□20 is as follows.

Item			Description
			NX701-1□20
Supported port			Built-in EtherNet/IP port
Supported DB *1*2			Microsoft Corporation: SQL Server 2012/2014/2016/2017/2019/2022 Oracle Corporation: Oracle Database 11g /12c/18c/19c/21c/23ai (23c) MySQL Community Edition 5.6/5.7/8.0 *3 International Business Machines Corporation (IBM): DB2 for Linux, UNIX and Windows 9.7/10.1/10.5/11.1 Firebird Foundation Incorporated: Firebird 2.5 The PostgreSQL Global Development Group: PostgreSQL 9.4/9.5/9.6/10/11/12/13/14/15/16
Number of DB Connections (Number of databases that can be connected at the same time)			3 connections max. *4
Instruction	**Supported operations**		The following operations can be performed by executing DB Connection Instructions in the NJ/NX-series CPU Units. Inserting records (INSERT), Updating records (UPDATE), Retrieving records (SELECT), Deleting records (DELETE), Execute Stored Procedure *5, and Execute Batch Insert *5
	Max. number of instructions for simultaneous execution		32
	Max. number of columns in an INSERT operation		SQL Server: 1,024 Oracle: 1,000 DB2: 1,000 MySQL: 1,000 Firebird: 1,000 PostgreSQL: 1,000
	Max. number of columns in an UPDATE operation		SQL Server: 1,024 Oracle: 1,000 DB2: 1,000 MySQL: 1,000 Firebird: 1,000 PostgreSQL: 1,000
	Max. number of columns in a SELECT operation		SQL Server: 1,024 Oracle: 1,000 DB2: 1,000 MySQL: 1,000 Firebird: 1,000 PostgreSQL: 1,000
	Max. number of records in the output of a SELECT operation		65,535 elements, 4 MB
	Stored procedure call *5	**Supported databases**	• SQL Server • Oracle Database • MySQL Community Edition • PostgreSQL
		Argument (Sum of IN, OUT and INOUT)	Up to 256 variables *6
		Return value	One variable
		Result set	Supported
		Spool function	Not supported
	Batch insert execution *5	**Supported databases**	• SQL Server • Oracle Database • MySQL Community Edition • PostgreSQL
		Supported data size	Less than 1,000 columns and upper limit (8 MB) of structure variable size or less *7
		Spool function	Not supported
	Max. number of DB Map Variables for which a mapping can be connected		SQL Server: 60 Oracle: 30 DB2: 30 MySQL: 30 Firebird: 15 PostgreSQL: 30 *8
Run mode of the DB Connection Service			Operation Mode or Test Mode • Operation Mode: When each instruction is executed, the service actually accesses the DB. • Test Mode: When each instruction is executed, the service ends the instruction normally without accessing the DB actually.
Spool function			Used to store SQL statements when an error occurred and resend the statements when the communications are recovered from the error.
	Spool capacity		2 MB *9
Operation Log function			The following three types of logs can be recorded. • Execution Log: Log for tracing the executions of the DB Connection Service. • Debug Log: Detailed log for SQL statement executions of the DB Connection Service. • SQL Execution Failure Log: Log for execution failures of SQL statements in the DB.
DB Connection Service shutdown function			Used to shut down the DB Connection Service after automatically saving the Operation Log files into the SD Memory Card.
Encrypted Communication		**Supported databases**	• SQL Server • Oracle Database • MySQL Community Edition • PostgreSQL
		TLS Ver.	TLS 1.2

*1. SQL Server 2014, Oracle Database 12c and PostgreSQL 9.4 are supported by the DB Connection Service Version 1.02 or higher.
SQL Server 2016, My SQL 5.7, DB2 11.1 and Postgre SQL 9.5/9.6 are supported by the DB Connection Service Version 1.03 or higher.
SQL Server 2017 is supported by the DB Connection Service Version 1.04 or higher.
Oracle Database 18c, MySQL Community Edition 8.0 and PostgreSQL 10 are supported by the DB Connection Service Version 2.00 or higher.
You cannot use Oracle 10g with the DB Connection Service version 2.00 or higher.
SQL Server 2019, Oracle Database 19c and PostgreSQL 11/12/13 are supported by the DB Connection Service Version 2.01 or higher.
SQL Server 2022, Oracle Database 21c/23ai (23c) and PostgreSQL 14/15/16 are supported by the DB Connection Service Version 2.04 or higher.
*2. Connection to the DB on the cloud is not supported.
*3. The supported storage engines of the DB are InnoDB and MyISAM.
*4. When two or more DB Connections are established, the operation cannot be guaranteed if you set different database types for the connections.
*5. The function is available for the DB Connection Service Version 2.00 or higher.
*6. Depends on members of a structure.
*7. Constrained by the memory capacity for variables. See the specifications for the memory capacity for variables.
*8. Even if the number of DB Map Variables has not reached the upper limit, the total number of members of structures used as data type of DB Map Variables is 10,000 members max.
*9. Refer to "NJ/NX-series Database Connection CPU Units User's Manual(W527)" for the information.

Note: The extended support for databases has ended for the following DB versions.
Please consider replacing the current database with a new version.

Item	Discription
Microsoft Corporation: SQL Server	2008/2008R2
Oracle Corporation: Oracle Database	10g
Oracle Corporation: MySQL Community Edition	5.1/5.5
International Business Machines Corporation (IBM): DB2 for Linux, UNIX and Windows	9.5
Firebird Foundation Incorporated: Firebird	2.1
The PostgreSQL Global Development Group: PostgreSQL	9.2/9.3

Version Information

Unit Versions and Programming Devices (NX701 CPU Units)

Refer to "NX-series CPU Unit Hardware User's Manual (W535)".

Functions That Were Added or Changed for Each Unit Version and Sysmac Studio version

Refer to "NX-series CPU Unit Hardware User's Manual (W535)".

Components and Functions

CPU Unit

NX701-□□□□

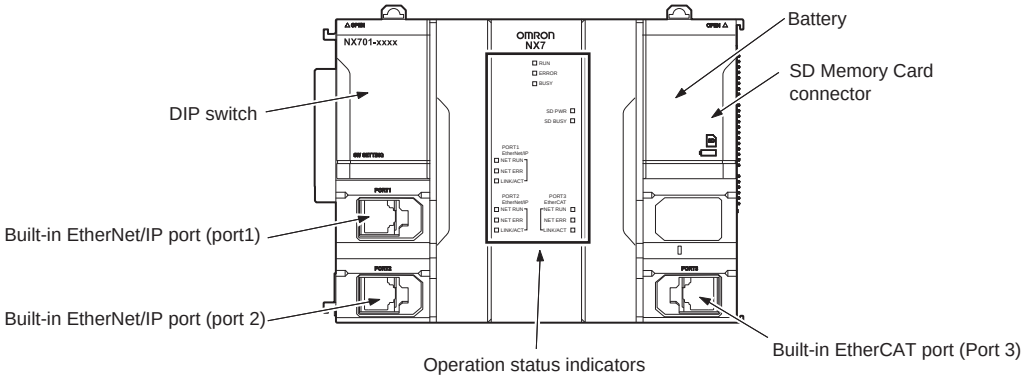

Power Supply Unit

NX-PA9001

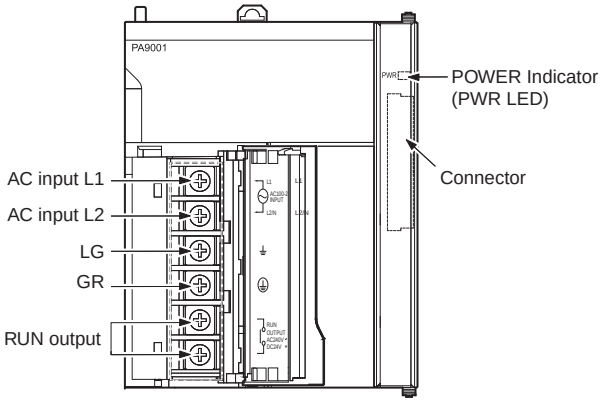

NX-PD7001

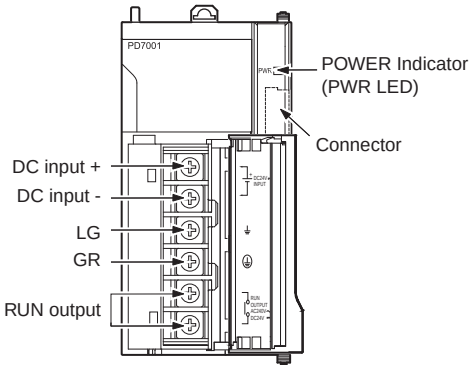

Dimensions

(Unit: mm)

CPU Units

NX701-□□□□



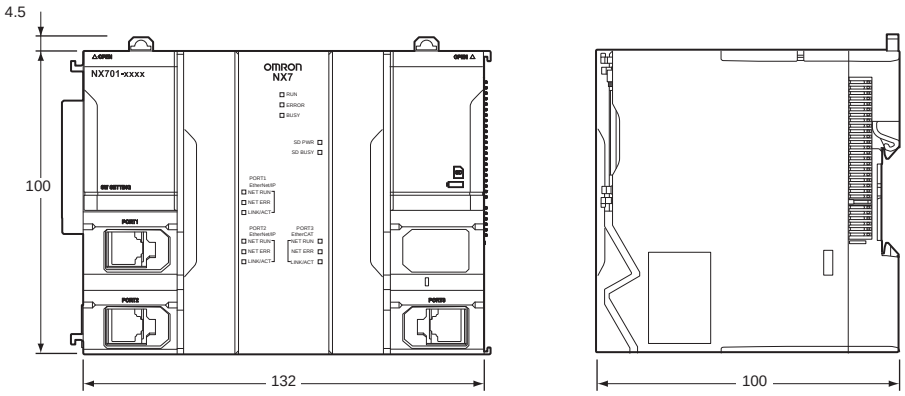

When a cable is connected (such as a communications cable)

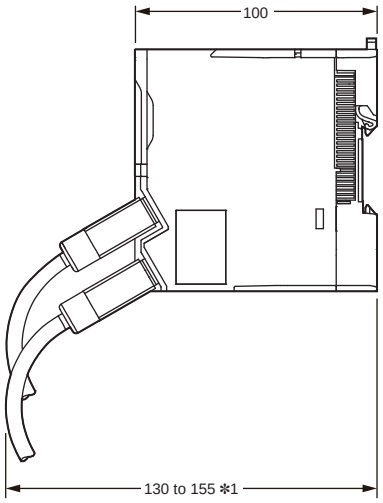

✻1. This is the dimension from the back of the Unit to the communications cables.
130 mm: When an MPS588-C Connector is used.
155 mm: When an XS6G-T421-1 Connector is used.

Power Supply Units

NX-PA9001

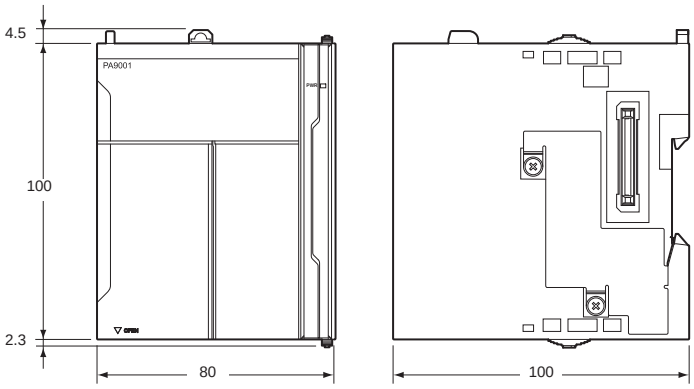

NX-PD7001

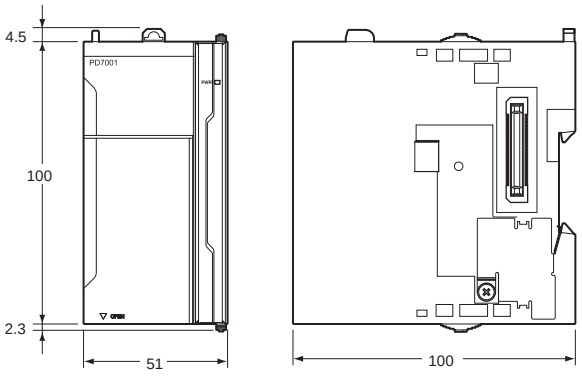

End Cover

(included with CPU Units)

NX-END01

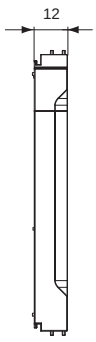

Related Manuals

Cat. No.	Model number	Manual	Application	Description
W514	NX701-□□□□ NX1P2-□□□□ NJ501-□□□□ NJ301-□□□□ NJ101-□□□□	NJ/NX-series Startup Guide (Motion Control)	Using the motion control function module of the NJ/NX-series for the first time	The startup procedures for setting axis parameters and performing simple one-axis positioning and two-axis linear interpolation with an NJ/NX-series CPU Unit and the operating instructions for the Sysmac Studio are described.
W535	NX701-□□□□	NX-series CPU Unit Hardware User's Manual	Learning the basic specifications of the NX701-series CPU Units, including introductory information, designing, installation, and maintenance. Mainly hardware information is provided.	An introduction to the entire NX701-series system is provided along with the following information on a Controller built with a CPU Unit. • Features and system configuration • Introduction • Part names and functions • General specifications • Installation and wiring • Maintenance and inspection
W501	NX701-□□□□ NX502-□□□□ NX102-□□□□ NX1P2-□□□□ NJ501-□□□□ NJ301-□□□□ NJ101-□□□□	NJ/NX-series CPU Unit Software User's Manual	Learning how to program and set up an NJ/NX-series CPU Unit. Mainly software information is provided.	The following information is provided on a Controller built with an NJ/NX-series CPU Unit. • CPU Unit operation • CPU Unit features • Initial settings • Programming language specifications and programming with the IEC 61131-3 standard.
W507	NX701-□□□□ NX502-□□□□ NX102-□□□□ NX1P2-□□□□ NJ501-□□□□ NJ301-□□□□ NJ101-□□□□	NJ/NX-series CPU Unit Motion Control User's Manual	Learning about motion control settings and programming concepts	The settings and operation of the CPU Unit and programming concepts for motion control are described.
W505	NX701-□□□□ NX502-□□□□ NX102-□□□□ NX1P2-□□□□ NJ501-□□□□ NJ301-□□□□ NJ101-□□□□	NJ/NX-series CPU Unit Built-in EtherCAT Port User's Manual	Using the built-in EtherCAT port on an NJ/NX-series CPU Unit	Information on the built-in EtherCAT port is provided. This manual provides an introduction and provides information on the configuration, features, and setup.
W527	NX701-□□20 NX502-□□□□ NX102-□□20 NJ501-□□20 NJ101-□□20	NJ/NX-series Database Connection CPU Units User's Manual	Learning about the functions and application procedures of the NJ/NX-series DB Connection function.	Describes the functions and application procedures of the NJ/NX-series DB Connection function.
W506	NX701-□□□□ NX502-□□□□ NX102-□□□□ NX1P2-□□□□ NJ501-□□□□ NJ301-□□□□ NJ101-□□□□	NJ/NX-series CPU Unit Built-in EtherNet/IP Port User's Manual	Using the built-in EtherNet/IP port on an NJ/NX-series CPU Unit	Information on the built-in EtherNet/IP port is provided. Information is provided on the basic setup, tag data links, FINS communications (non-disclosure), and other features.
W588	NX701-□□□□ NX502-□□□□ NX102-□□□□ NJ501-1□00	NJ/NX-series CPU Unit OPC UA User's Manual	Using the OPC UA.	Describes the OPC UA.
W502	NX701-□□□□ NX502-□□□□ NX102-□□□□ NX1P2-□□□□ NJ501-□□□□ NJ301-□□□□ NJ101-□□□□	NJ/NX-series Instructions Reference Manual	Learning about the specifications of the instruction set that is provided by OMRON	The instructions in the instruction set (IEC 61131-3 specifications) are described.
W508	NX701-□□□□ NX502-□□□□ NX102-□□□□ NX1P2-□□□□ NJ501-□□□□ NJ301-□□□□ NJ101-□□□□	NJ/NX-series Motion Control Instructions Reference Manual	Learning about the specifications of the motion control instructions that are provided by OMRON	The motion control instructions are described.
W503	NX701-□□□□ NX502-□□□□ NX102-□□□□ NX1P2-□□□□ NJ501-□□□□ NJ301-□□□□ NJ101-□□□□	NJ/NX-series Troubleshooting Manual	Learning about the errors that may be detected in an NJ/NX-series Controller.	Concepts on managing errors that may be detected in an NJ/NX-series Controller and information on individual errors are described.
W504	SYSMAC-SE2□□□	Sysmac Studio Version 1 Operation Manual	Learning about the operating procedures and functions of the Sysmac Studio.	Describes the operating procedures of the Sysmac Studio.
W589	SYSMACSE2□□□ SYSMAC-TA4□□□	Sysmac Studio Project Version Control Function Operation Manual	Learning the overview of the Sysmac Studio project version control function and how to use it.	The manual outlines the Sysmac Studio project version control function, and describes how to install, basic operation, and how to operate its major functions.

Sysmac is a trademark or registered trademark of OMRON Corporation in Japan and other countries for OMRON factory automation products.
Microsoft, Windows, Windows Vista and SQL Server are registered trademarks of Microsoft Corporation in the United States and other countries.
Oracle, Oracle Database and MySQL are trademarks or registered trademarks of Oracle Corporation and/or its affiliates in the United States and other countries.
IBM and DB2 are trademarks or registered trademarks of International Business Machines Corp., registered in the United States and other countries.
EtherCAT® is a registered trademark of Beckhoff Automation GmbH for their patented technology.
EtherNet/IP™ and DeviceNet™ are trademarks of ODVA.
OPC UA is trademark of the OPC Foundation.
This product includes software developed by the OpenSSL Project for use in the OpenSSL Toolkit. (http://www.openssl.org/)
This product includes cryptographic software written by Eric Young (eay@cryptsoft.com).
Other company names and product names in this document are the trademarks or registered trademarks of there respective companies.

Terms and Conditions Agreement

Read and understand this catalog.

Please read and understand this catalog before purchasing the products. Please consult your OMRON representative if you have any questions or comments.

Warranties.

(a) Exclusive Warranty. Omron's exclusive warranty is that the Products will be free from defects in materials and workmanship for a period of twelve months from the date of sale by Omron (or such other period expressed in writing by Omron). Omron disclaims all other warranties, express or implied.

(b) Limitations. OMRON MAKES NO WARRANTY OR REPRESENTATION, EXPRESS OR IMPLIED, ABOUT NON-INFRINGEMENT, MERCHANTABILITY OR FITNESS FOR A PARTICULAR PURPOSE OF THE PRODUCTS. BUYER ACKNOWLEDGES THAT IT ALONE HAS DETERMINED THAT THE PRODUCTS WILL SUITABLY MEET THE REQUIREMENTS OF THEIR INTENDED USE.

Omron further disclaims all warranties and responsibility of any type for claims or expenses based on infringement by the Products or otherwise of any intellectual property right. (c) Buyer Remedy. Omron's sole obligation hereunder shall be, at Omron's election, to (i) replace (in the form originally shipped with Buyer responsible for labor charges for removal or replacement thereof) the non-complying Product, (ii) repair the non-complying Product, or (iii) repay or credit Buyer an amount equal to the purchase price of the non-complying Product; provided that in no event shall Omron be responsible for warranty, repair, indemnity or any other claims or expenses regarding the Products unless Omron's analysis confirms that the Products were properly handled, stored, installed and maintained and not subject to contamination, abuse, misuse or inappropriate modification. Return of any Products by Buyer must be approved in writing by Omron before shipment. Omron Companies shall not be liable for the suitability or unsuitability or the results from the use of Products in combination with any electrical or electronic components, circuits, system assemblies or any other materials or substances or environments. Any advice, recommendations or information given orally or in writing, are not to be construed as an amendment or addition to the above warranty.

See http://www.omron.com/global/ or contact your Omron representative for published information.

Limitation on Liability; Etc.

OMRON COMPANIES SHALL NOT BE LIABLE FOR SPECIAL, INDIRECT, INCIDENTAL, OR CONSEQUENTIAL DAMAGES, LOSS OF PROFITS OR PRODUCTION OR COMMERCIAL LOSS IN ANY WAY CONNECTED WITH THE PRODUCTS, WHETHER SUCH CLAIM IS BASED IN CONTRACT, WARRANTY, NEGLIGENCE OR STRICT LIABILITY.

Further, in no event shall liability of Omron Companies exceed the individual price of the Product on which liability is asserted.

Suitability of Use.

Omron Companies shall not be responsible for conformity with any standards, codes or regulations which apply to the combination of the Product in the Buyer's application or use of the Product. At Buyer's request, Omron will provide applicable third party certification documents identifying ratings and limitations of use which apply to the Product. This information by itself is not sufficient for a complete determination of the suitability of the Product in combination with the end product, machine, system, or other application or use. Buyer shall be solely responsible for determining appropriateness of the particular Product with respect to Buyer's application, product or system. Buyer shall take application responsibility in all cases.

NEVER USE THE PRODUCT FOR AN APPLICATION INVOLVING SERIOUS RISK TO LIFE OR PROPERTY OR IN LARGE QUANTITIES WITHOUT ENSURING THAT THE SYSTEM AS A WHOLE HAS BEEN DESIGNED TO ADDRESS THE RISKS, AND THAT THE OMRON PRODUCT(S) IS PROPERLY RATED AND INSTALLED FOR THE INTENDED USE WITHIN THE OVERALL EQUIPMENT OR SYSTEM.

Programmable Products.

Omron Companies shall not be responsible for the user's programming of a programmable Product, or any consequence thereof.

Performance Data.

Data presented in Omron Company websites, catalogs and other materials is provided as a guide for the user in determining suitability and does not constitute a warranty. It may represent the result of Omron's test conditions, and the user must correlate it to actual application requirements. Actual performance is subject to the Omron's Warranty and Limitations of Liability.

Change in Specifications.

Product specifications and accessories may be changed at any time based on improvements and other reasons. It is our practice to change part numbers when published ratings or features are changed, or when significant construction changes are made. However, some specifications of the Product may be changed without any notice. When in doubt, special part numbers may be assigned to fix or establish key specifications for your application. Please consult with your Omron's representative at any time to confirm actual specifications of purchased Product.

Errors and Omissions.

Information presented by Omron Companies has been checked and is believed to be accurate; however, no responsibility is assumed for clerical, typographical or proofreading errors or omissions.

Note: Do not use this document to operate the Unit.

OMRON Corporation **Industrial Automation Company**

Kyoto, JAPAN **Contact : www.ia.omron.com**

Regional Headquarters

OMRON EUROPE B.V.
Wegalaan 67-69, 2132 JD Hoofddorp
The Netherlands
Tel: (31) 2356-81-300 Fax: (31) 2356-81-388

OMRON ELECTRONICS LLC
2895 Greenspoint Parkway, Suite 200
Hoffman Estates, IL 60169 U.S.A.
Tel: (1) 847-843-7900 Fax: (1) 847-843-7787

OMRON ASIA PACIFIC PTE. LTD.
438B Alexandra Road, #08-01/02 Alexandra
Technopark, Singapore 119968
Tel: (65) 6835-3011 Fax: (65) 6835-3011

OMRON (CHINA) CO., LTD.
Room 2211, Bank of China Tower,
200 Yin Cheng Zhong Road,
PuDong New Area, Shanghai, 200120, China
Tel: (86) 21-6023-0333 Fax: (86) 21-5037-2388

Authorized Distributor:

©OMRON Corporation 2018-2025 All Rights Reserved.
In the interest of product improvement,
specifications are subject to change without notice.

CSM_8_11
Cat. No. P141-E1-20 0625 (1218)