OMRON

Machine Automation Controller
NX1P

Compact package-type machine automation controller



NX1P2-9024DT
NX1P2-9024DT1



NX1P2-1□40DT
NX1P2-1□40DT1

Features

- Integrated sequence control and motion control
- Up to eight axes of control via EtherCAT
- Up to four synchronized axes - electronic gear/cam and linear/circular interpolation
- Standard-feature EtherCAT control network support
- Safety subsystem on EtherCAT
- Standard-feature EtherNet/IP port
- Built-in I/O
- Up to eight NX I/O Units connectable
- Up to sixteen remote NX I/O Units connectable via EtherCAT coupler
- Up to two option boards connectable to add serial communications or analog I/O functionality
- Battery-free operation
- Fully conforms with IEC 61131-3 standard programming

System Configuration

Basic System Configuration

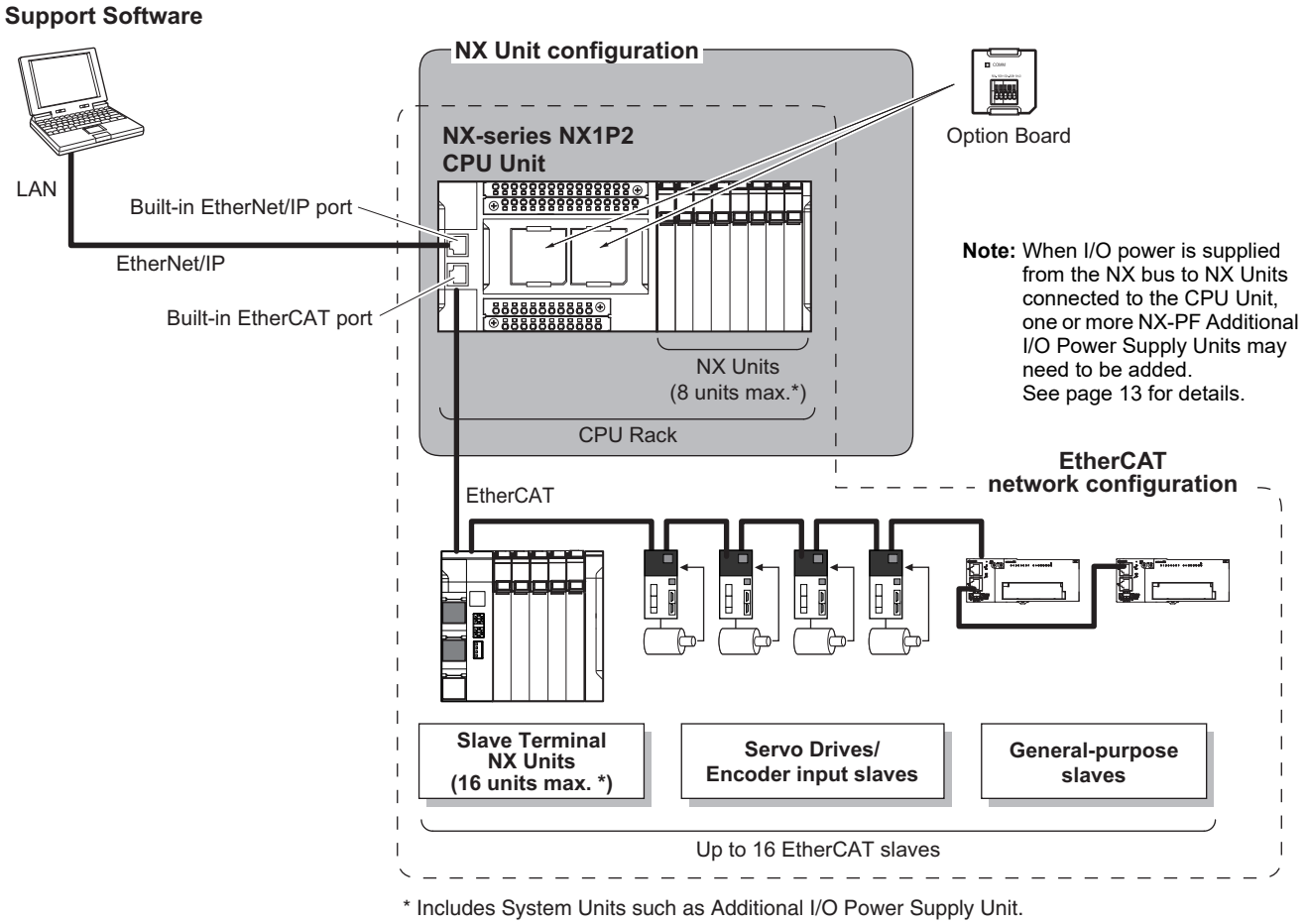

* Includes System Units such as Additional I/O Power Supply Unit.

Interpreting Model Numbers

Not all combinations are possible. Refer to List of Models in Ordering Information, below.

NX1P2-□□□□D□
1 2 3 4 5 6

No	Item	Symbol	Specifications
1	Type	P	DC power supply model with built-in I/O
2	Control engine	1	Motion control axes
		9	No motion control axis (Single-axis position control axes only)
3	Synchronized motion control axes *	0	2 axes
		1	4 axes
4	Built-in I/O	24	24 (14 inputs, 10 outputs)
		40	40 (24 inputs, 16 outputs)
5	Built-in input type	D	DC inputs
6	Built-in output type	T	NPN transistor outputs
		T1	PNP transistor outputs

* The number of synchronized motion control axes when "2 Control engine" is "1".
When "2 Control engine" is "9", "3 Synchronized motion control axes" is always "0" but there is no synchronized motion control axis.

Ordering Information

Applicable standards

Refer to the OMRON website (www.ia.omron.com) or ask your OMRON representative for the most recent applicable standards for each model.

NX-series NX1P2 CPU Units

Product Name	Program capacity	Memory capacity for variables	Maximum number of used real axes			Total number of built-in I/O points			Model
				Used motion control servo axes *1	Used single-axis position control servo axes *1		Number of input points	Number of output points	
NX1P2 CPU Unit 	1.5 MB	32 KB (Retained during power interruptions) or 2 MB (Not retained during power interruptions)	8 axes	4 axes	4 axes	40 points	24 points	16 points, NPN transistor	**NX1P2-1140DT**
								16 points, PNP transistor *2	**NX1P2-1140DT1**
			6 axes	2 axes	4 axes			16 points, NPN transistor	**NX1P2-1040DT**
								16 points, PNP transistor *2	**NX1P2-1040DT1**
			4 axes	0 axes	4 axes	24 points	14 points	10 points, NPN transistor	**NX1P2-9024DT**
								10 points, PNP transistor *2	**NX1P2-9024DT1**

Note: One NX-END02 End Cover is provided with the NX1P2 CPU Unit.

*1. The following table shows the enabled functions.

Motion control function	Motion control servo axes	Single-axis position control servo axes
Single-axis position control	Yes	Yes
Single-axis synchronized control	Yes	No
Single-axis velocity control	Yes	Yes *
Single-axis torque control	Yes	No
Multi-axes coordinated control	Yes	No

*You can use only the MC_MoveVelocity (Velocity Control) instruction.

*2. With the load short-circuit protection.

Option Boards (For CPU Units)

The Option Boards are mounted to the option board slot on the CPU Unit.

Product Name	Specification	Supported protocol	Model
Serial Communications Option Board 	One RS-232C port. Transmission distance: 15 m. Connection type: Screwless clamping terminal block (9 terminals).	Host link, Modbus-RTU master, and no-protocol	**NX1W-CIF01**
	One RS-422A/485 port. Transmission distance: 50 m. Connection type: Screwless clamping terminal block (5 terminals)		**NX1W-CIF11**
	One RS-422A/485 port (isolated). Transmission distance: 500 m. Connection type: Screwless clamping terminal block (5 terminals)		**NX1W-CIF12**
Analog I/O Option Board 	Analog input: 2 Voltage input: 0 to 10 V (Resolution: 1/4,000). Current input: 0 to 20 mA (1/2,000) Connection type: Screwless clamping terminal block (5 terminals)		**NX1W-ADB21**
	Analog output: 2 Voltage output: 0 to 10 V (Resolution: 1/4,000) Connection type: Screwless clamping terminal block (3 terminals)		**NX1W-DAB21V**
	Analog input: 2/Analog output: 2 Voltage input: 0 to 10 V (Resolution: 1/4,000). Current input: 0 to 20 mA (1/2,000) Voltage output: 0 to 10 V (Resolution: 1/4,000) Screwless clamping terminal block (8 terminals)		**NX1W-MAB221**

NX Units

Up to eight NX Units can be connected to an NX1P2 CPU Unit.

Digital Input Units

Product Name	Specification					Model
	Number of points	Internal I/O common	Rated input voltage	I/O refreshing method	ON/OFF response time	
DC Input Unit  (Screwless Clamping Terminal Block, 12 mm Width/24 mm Width)	4 points	NPN	12 to 24 VDC	Switching Synchronous I/O refreshing and Free-Run refreshing	20 μs max./400 μs max.	**NX-ID3317**
			24 VDC		100 ns max./100 ns max.	**NX-ID3343**
				Input refreshing with input changed time only *		**NX-ID3344**
		PNP	12 to 24 VDC	Switching Synchronous I/O refreshing and Free-Run refreshing	20 μs max./400 μs max.	**NX-ID3417**
			24 VDC		100 ns max./100 ns max.	**NX-ID3443**
				Input refreshing with input changed time only *		**NX-ID3444**
	8 points	NPN		Switching Synchronous I/O refreshing and Free-Run refreshing	20 μs max./400 μs max.	**NX-ID4342**
		PNP				**NX-ID4442**
	16 points	NPN				**NX-ID5342**
		PNP				**NX-ID5442**
	32 points	NPN				**NX-ID6342**
		PNP				**NX-ID6442**
DC Input Unit  (M3 Screw Terminal Block, 30 mm Width)	16 points	For both NPN/PNP	24 VDC	Switching Synchronous I/O refreshing and Free-Run refreshing	20 μs max./400 μs max.	**NX-ID5142-1**
DC Input Unit  (MIL Connector, 30 mm Width)	16 points	For both NPN/PNP	24 VDC	Switching Synchronous I/O refreshing and Free-Run refreshing	20 μs max./400 μs max.	**NX-ID5142-5**
	32 points					**NX-ID6142-5**
DC Input Unit  (Fujitsu/OTAX Connector, 30 mm Width)	32 points	For both NPN/PNP	24 VDC	Switching Synchronous I/O refreshing and Free-Run refreshing	20 μs max./400 μs max.	**NX-ID6142-6**
AC Input Unit  (Screwless Clamping Terminal Block, 12 mm Width)	4 points	200 to 240 VAC, 50/60 Hz (170 to 264 VAC, ±3 Hz)		Free-Run refreshing	10 ms max./40 ms max.	**NX-IA3117**

* To use input refreshing with input changed time, the EtherCAT Coupler Unit with unit version 1.1 or later and the Sysmac Studio version 1.07 or higher are required.

Digital output Units

Product Name	Specification						Model
	Number of points	Internal I/O common	Maximum value of load current	Rated voltage	I/O refreshing method	ON/OFF response time	
Transistor Output Unit  (Screwless Clamping Terminal Block, 12 mm Width/24 mm Width)	2 points	NPN	0.5 A/point, 1 A/Unit	24 VDC	Output refreshing with specified time stamp only *	300 ns max./ 300 ns max.	**NX-OD2154**
		PNP					**NX-OD2258**
	4 points	NPN	0.5 A/point, 2 A/Unit	12 to 24 VDC	Switching Synchronous I/O refreshing and Free-Run refreshing	0.1 ms max./ 0.8 ms max.	**NX-OD3121**
				24 VDC		300 ns max./ 300 ns max.	**NX-OD3153**
		PNP				0.5 ms max./ 1.0 ms max.	**NX-OD3256**
						300 ns max./ 300 ns max.	**NX-OD3257**
			2 A/point, 8 A/Unit			0.5 ms max./ 1.0 ms max.	**NX-OD3268**
	8 points	NPN	0.5 A/point, 4 A/Unit	12 to 24 VDC		0.1 ms max./ 0.8 ms max.	**NX-OD4121**
		PNP		24 VDC		0.5 ms max./ 1.0 ms max.	**NX-OD4256**
	16 points	NPN		12 to 24 VDC		0.1 ms max./ 0.8 ms max.	**NX-OD5121**
		PNP		24 VDC		0.5 ms max./ 1.0 ms max.	**NX-OD5256**
	32 points	NPN	0.5 A/point, 4 A/terminal block, 8 A/Unit	12 to 24 VDC		0.1 ms max./ 0.8 ms max.	**NX-OD6121**
		PNP		24 VDC		0.5 ms max./ 1.0 ms max.	**NX-OD6256**
Transistor Output Unit  (M3 Screw Terminal Block, 30 mm Width)	16 points	NPN	0.5 A/point, 5 A/Unit	12 to 24 VDC	Switching Synchronous I/O refreshing and Free-Run refreshing	0.1 ms max./ 0.8 ms max.	**NX-OD5121-1**
		PNP		24 VDC		0.5 ms max./ 1.0 ms max.	**NX-OD5256-1**
Transistor Output Unit  (MIL Connector, 30 mm Width)	16 points	NPN	0.5 A/point, 2 A/Unit	12 to 24 VDC	Switching Synchronous I/O refreshing and Free-Run refreshing	0.1 ms max./ 0.8 ms max.	**NX-OD5121-5**
		PNP		24 VDC		0.5 ms max./ 1.0 ms max.	**NX-OD5256-5**
	32 points	NPN	0.5 A/point, 2 A/common, 4 A/Unit	12 to 24 VDC		0.1 ms max./ 0.8 ms max.	**NX-OD6121-5**
		PNP		24 VDC		0.5 ms max./ 1.0 ms max.	**NX-OD6256-5**
Transistor Output Unit  (Fujitsu/OTAX Connector, 30 mm Width)	32 points	NPN	0.5 A/point, 2 A/common, 4 A/Unit	12 to 24 VDC	Switching Synchronous I/O refreshing and Free-Run refreshing	0.1 ms max./ 0.8 ms max.	**NX-OD6121-6**
Relay Output Unit  (Screwless Clamping Terminal Block, 12 mm Width/24 mm Width)	2 points	N.O.	250 VAC/2 A (cosϕ=1) 250 VAC/2 A (cosϕ=0.4) 24 VDC/2 A 4 A/Unit		Free-Run refreshing	15 ms max./15 ms max.	**NX-OC2633**
		N.O.+N.C.					**NX-OC2733**
	8 points	N.O.	250 VAC/2 A (cosϕ=1) 250 VAC/2 A (cosϕ=0.4) 24 VDC/2 A 8 A/Unit		Free-Run refreshing	15 ms max./15 ms max.	**NX-OC4633**

* To use input refreshing with input changed time, the EtherCAT Coupler Unit with unit version 1.1 or later and the Sysmac Studio version 1.07 or higher are required.

Digital Mixed I/O Units

Product Name	Specification					Model
	Number of points	Internal I/O common	Maximum value of load current	I/O refreshing method	ON/OFF response time	
DC Input/Transistor Output Unit  (MIL Connector, 30 mm Width)	Outputs: 16 points Inputs: 16 points	Outputs: NPN Inputs: For both NPN/PNP	Outputs: 12 to 24 VDC Inputs: 24 VDC	Switching Synchronous I/O refreshing and Free-Run refreshing	Outputs: 0.1 ms max./0.8 ms max. Inputs: 20 μs max./400 μs max.	**NX-MD6121-5**
		Outputs: PNP Inputs: For both NPN/PNP	Outputs: 24 VDC Inputs: 24 VDC		Outputs: 0.5 ms max./1.0 ms max. Inputs: 20 μs max./400 μs max.	**NX-MD6256-5**
DC Input/Transistor Output Unit  (Fujitsu/OTAX Connector, 30 mm Width)	Outputs: 16 points Inputs: 16 points	Outputs: NPN Inputs: For both NPN/PNP	Outputs: 12 to 24 VDC Inputs: 24 VDC	Switching Synchronous I/O refreshing and Free-Run refreshing	Outputs: 0.1 ms max./0.8 ms max. Inputs: 20 μs max./400 μs max.	**NX-MD6121-6**

High-speed Analog Input Units

Product name	Specifications								Model
	Number of points	Input range	Resolution	Input method	Conversion time	Trigger input section		I/O refreshing method	
						Number of points	Internal I/O common		
High-speed Analog Input Unit 	4	-10 to 10 V -5 to 5 V 0 to 10 V 0 to 5 V 1 to 5 V 0 to 20 mA 4 to 20 mA	• Input range of -10 to 10 V or -5 to 5 V: 1/64,000 (full scale) • Other input range: 1/32,000 (full scale)	Differential input	5 μs per channel	4	NPN	Synchro-nous I/O refreshing	**NX-HAD401**
							PNP		**NX-HAD402**

Analog Input Units

Product Name	Specification									Model
	Number of points	Input range	Resolution	Conversion value, decimal number (0 to 100%)	Over all accuracy (25°C)	Input method	Conversion time	Input impedance	I/O refreshing method	
Voltage Input Unit 	2 points	-10 to +10 V	1/8000	-4000 to 4000	±0.2% (full scale)	Single-ended input	250 µs/ point	1 MΩ min.	Free-Run refreshing	**NX-AD2603**
						Differential Input				**NX-AD2604**
			1/30000	-15000 to 15000	±0.1% (full scale)	Differential Input	10 µs/ point		Selectable Synchronous I/O refreshing or Free-Run refreshing	**NX-AD2608**
	4 points		1/8000	-4000 to 4000	±0.2% (full scale)	Single-ended input	250 µs/ point		Free-Run refreshing	**NX-AD3603**
						Differential Input				**NX-AD3604**
			1/30000	-15000 to 15000	±0.1% (full scale)	Differential Input	10 µs/ point		Selectable Synchronous I/O refreshing or Free-Run refreshing	**NX-AD3608**
	8 points		1/8000	-4000 to 4000	±0.2% (full scale)	Single-ended input	250 µs/ point		Free-Run refreshing	**NX-AD4603**
						Differential Input				**NX-AD4604**
			1/30000	-15000 to 15000	±0.1% (full scale)	Differential Input	10 µs/ point		Selectable Synchronous I/O refreshing or Free-Run refreshing	**NX-AD4608**
Current Input Unit 	2 points	4 to 20 mA	1/8000	0 to 8000	±0.2% (full scale)	Single-ended input	250 µs/ point	250 Ω	Free-Run refreshing	**NX-AD2203**
						Differential Input				**NX-AD2204**
			1/30000	0 to 30000	±0.1% (full scale)	Differential Input	10 µs/ point		Selectable Synchronous I/O refreshing or Free-Run refreshing	**NX-AD2208**
	4 points		1/8000	0 to 8000	±0.2% (full scale)	Single-ended input	250 µs/ point		Free-Run refreshing	**NX-AD3203**
						Differential Input				**NX-AD3204**
			1/30000	0 to 30000	±0.1% (full scale)	Differential Input	10 µs/ point		Selectable Synchronous I/O refreshing or Free-Run refreshing	**NX-AD3208**
	8 points		1/8000	0 to 8000	±0.2% (full scale)	Single-ended input	250 µs/ point	85 Ω	Free-Run refreshing	**NX-AD4203**
						Differential Input				**NX-AD4204**
			1/30000	0 to 30000	±0.1% (full scale)	Differential Input	10 µs/ point		Selectable Synchronous I/O refreshing or Free-Run refreshing	**NX-AD4208**

Analog Output Units

Product Name	Specification							Model
	Number of points	Input range	Resolution	Output setting value, decimal number (0 to 100%)	Over all accuracy (25°C)	Conversion time	I/O refreshing method	
Voltage Output Unit 	2 points	-10 to +10 V	1/8000	-4000 to 4000	±0.3% (full scale)	250 µs/point	Free-Run refreshing	**NX-DA2603**
			1/30000	-15000 to 15000	±0.1% (full scale)	10 µs/point	Selectable Synchronous I/O refreshing or Free-Run refreshing	**NX-DA2605**
	4 points		1/8000	-4000 to 4000	±0.3% (full scale)	250 µs/point	Free-Run refreshing	**NX-DA3603**
			1/30000	-15000 to 15000	±0.1% (full scale)	10 µs/point	Selectable Synchronous I/O refreshing or Free-Run refreshing	**NX-DA3605**
Current Output Unit 	2 points	4 to 20 mA	1/8000	0 to 8000	±0.3% (full scale)	250 µs/point	Free-Run refreshing	**NX-DA2203**
			1/30000	0 to 30000	±0.1% (full scale)	10 µs/point	Selectable Synchronous I/O refreshing or Free-Run refreshing	**NX-DA2205**
	4 points		1/8000	0 to 8000	±0.3% (full scale)	250 µs/point	Free-Run refreshing	**NX-DA3203**
			1/30000	0 to 30000	±0.1% (full scale)	10 µs/point	Selectable Synchronous I/O refreshing or Free-Run refreshing	**NX-DA3205**

Temperature Control Units

Product name	Specifications								Model
	Number of channels	Input type	Output	Number of output points	Number of CT input points	Control type	Conversion time	I/O refreshing method	
Advanced Temperature Control Unit 	4	Universal input (themocouple, resistance thermometer, analog voltage, analog current)	Voltage output (for driving SSR)	4	4	Heating/cooling control	50 ms	Free-Run refreshing	**NX-HTC3510-5**
			Linear current putput						
	8		Voltage output (for driving SSR)	8	8	Standard control			**NX-HTC4505-5**
Temperature Control Unit 2-channel Type 	2	Universal input (thermocouple, resistance thermometer)	Voltage output (for driving SSR)	2	2	Standard control			**NX-TC2405**
					None	Standard control			**NX-TC2406**
			Voltage output (for driving SSR)	4	None	Heating/cooling control			**NX-TC2407**
			Linear current output	2	None	Standard control			**NX-TC2408**
Temperature Control Unit 4-channel Type 	4		Voltage output (for driving SSR)	4	4	Standard control			**NX-TC3405**
					None	Standard control			**NX-TC3406**
			Voltage output (for driving SSR)	8	None	Heating/cooling control			**NX-TC3407**
			Linear current output	4	None	Standard control			**NX-TC3408**

Temperature Input Units

Product Name	Specification							Model
	Number of points	Input type	Resolution (25°C)	Over all accuracy (25°C)	Conversion time	I/O refreshing method	Terminals	
Thermocouple Input type 	2 points	Thermocouple	0.1°C max. *1	Refer to your OMRON website for details.	250 ms/Unit	Free-Run refreshing	16 Terminals	**NX-TS2101**
	4 points						16 Terminals x 2	**NX-TS3101**
	2 points		0.01°C max.		10 ms/Unit		16 Terminals	**NX-TS2102**
	4 points						16 Terminals x 2	**NX-TS3102**
	2 points		0.001°C max.		60 ms/Unit		16 Terminals	**NX-TS2104**
	4 points						16 Terminals x 2	**NX-TS3104**
Resistance Thermometer Input type 	2 points	Resistance Thermometer (Pt100/Pt1000, three-wire) *2	0.1°C max.		250 ms/Unit		16 Terminals	**NX-TS2201**
	4 points						16 Terminals x 2	**NX-TS3201**
	2 points		0.01°C max.		10 ms/Unit		16 Terminals	**NX-TS2202**
	4 points						16 Terminals x 2	**NX-TS3202**
	2 points		0.001°C max.		60 ms/Unit		16 Terminals	**NX-TS2204**
	4 points						16 Terminals x 2	**NX-TS3204**

*1. The resolution is 0.2°C max. when the input type is R, S, or W.
*2. The NX-TS2202 and NX-TS3202 only supports Pt100 three-wire sensor.

Heater Burnout Detection Units

Product Name	Specification							Model
	CT input section		Control output section					
	Number of inputs	Maximum heater current	Number of outputs	Internal I/O common	Maximum load current	Rated voltage	I/O refreshing method	
Heater Burnout Detection Unit 	4	50 AAC	4	NPN	0.1 A/point, 0.4 A/Unit	12 to 24 VDC	Free-Run refreshing	**NX-HB3101**
				PNP		24 VDC		**NX-HB3201**

Load Cell Input Unit

Product Name	Specification					Model
	Number of Model Standards points	Conversion cycle	I/O refreshing method *	Load cell excitation voltage	Input range	
Load Cell Input Unit 	1	125 µs	• Free-Run refreshing • Synchronous I/O refreshing • Task period prioritized refreshing	5 VDC ± 10%	-5.0 to 5.0 mV/V	**NX-RS1201**

* Refer to the *NX-series Load Cell Input Unit User's Manual* (W565) for detailed information on I/O refresh cycle.

Position interface: Incremental Encoder Input Units

Product Name	Specification					Model
	Number of channels	External inputs	Maximum response frequency	I/O refreshing method	Number of I/O entry mappings	
Incremental Encoder Input Unit 	1 (NPN)	3 (NPN)	500 kHz	• Free-Run refreshing • Synchronous I/O refreshing	1/1	**NX-EC0112**
	1 (PNP)	3 (PNP)				**NX-EC0122**
	1	3 (NPN)	4 MHz			**NX-EC0132**
		3 (PNP)				**NX-EC0142**
	2 (NPN)	None	500 kHz		2/2	**NX-EC0212**
	2 (PNP)					**NX-EC0222**

Position interface: SSI Input Units

Product Name	Specification					Model
	Number of channels	Input/Output form	Maximum data length	Encoder power supply	Type of external connections	
SSI Input Unit 	1	EIA standard RS-422-A	32 bits	24 VDC, 0.3 A/CH	Screwless push-in terminal block (12 terminals)	**NX-ECS112**
	2	EIA standard RS-422-A	32 bits	24 VDC, 0.3 A/CH	Screwless push-in terminal block (12 terminals)	**NX-ECS212**

Position interface: Pulse Output Units

Product Name	Specification							Model
	Number of channels *1	External inputs	External outputs	Maximum pulse output speed	I/O refreshing method	Number of I/O entry mappings	Control output interface	
Pulse Output Unit 	1 (NPN)	2 (NPN)	1 (NPN)	500 kpps	• Synchronous I/O refreshing • Task period prioritized refreshing *2	1/1	Open collector output	**NX-PG0112**
	1 (PNP)	2 (PNP)	1 (PNP)					**NX-PG0122**
	2	5 inputs/CH (NPN)	3 outputs/CH (NPN)	4 Mpps		2/2	Line driver output	**NX-PG0232-5**
		5 inputs/CH (PNP)	3 outputs/CH (PNP)					**NX-PG0242-5**
	4	5 inputs/CH (NPN)	3 outputs/CH (NPN)			4/4		**NX-PG0332-5**
		5 inputs/CH (PNP)	3 outputs/CH (PNP)					**NX-PG0342-5**

*1. This is the number of pulse output channels.
*2. Unit version 1.2 or later and an NX-ECC203 EtherCAT Coupler Unit are required.

EtherCAT Slave Unit

Product name	Specifications		Model
	Send/receive PDO data sizes *1	Refreshing method	
EtherCAT Slave Unit 	• Data input by the EtherCAT master (TxPDOs) 1,204 bytes max. • Data output by the EtherCAT master (RxPDOs) 1,200 bytes max.	Free-Run Mode	**NX-ECT101**

*1. The following shows the contents of the TxPDO data.
• I/O data set from the CPU Unit to the EtherCAT master: 1,200 bytes or less
• Status to notify the EtherCAT master: 4 bytes or less

Communications Interface Units

Product Name	Serial interface	External connection terminals	Number of serial ports	Communications protocol	Model
Communications Interface Unit 	RS-232C	Screwless Clamping Terminal Block	1 port	• No-protocol • Signal lines	**NX-CIF101**
	RS-422A/485				**NX-CIF105**
	RS-232C	D-Sub connector	2 ports		**NX-CIF210**

RFID Units

Product name	Amplifier/Antenna	No. of unit numbers used	Model
RFID Unit (1Ch) 	V680 series	1	**NX-V680C1**
RFID Unit (2Ch) 		2	**NX-V680C2**

IO-Link Master Unit

Product Name	Specification			Model
	Number of IO-Link ports	I/O refreshing method	I/O connection terminals	
IO-Link Master Unit 	4	Free-Run refreshing	Screwless clamping terminal block	**NX-ILM400**

System Units

Product Name	Specification	Model
Additional NX Unit Power Supply Unit 	Power supply voltage: 24 VDC (20.4 to 28.8 VDC) NX Bus power supply capacity: 10 W max.	**NX-PD1000**
Additional I/O Power Supply Unit 	Power supply voltage: 5 to 24 VDC (4.5 to 28.8 VDC) I/O power feed maximum current: 4 A	**NX-PF0630**
	Power supply voltage: 5 to 24 VDC (4.5 to 28.8 VDC) I/O power feed maximum current: 10 A *	**NX-PF0730**
I/O Power Supply Connection Unit 	Number of I/O power terminals: IOG: 16 terminals Current capacity of I/O power terminal: 4 A/terminal max.	**NX-PC0010**
	Number of I/O power terminals: IOV: 16 terminals Current capacity of I/O power terminal: 4 A/terminal max.	**NX-PC0020**
	Number of I/O power terminals: IOV: 8 terminals, IOG: 8 terminals Current capacity of I/O power terminal: 4 A/terminal max	**NX-PC0030**
Shield Connection Unit 	Number of shield terminals: 14 terminals (The following two terminals are functional ground terminals.)	**NX-TBX01**

* Use the NX-PF0730 at 4 A or less on the CPU Rack where the NX1P2 CPU Unit is mounted.

EtherNet/IP Coupler Unit

Product name	Current consumption	Maximum I/O power supply current	Model
EtherNet/IP Coupler Unit *1 	1.60 W or lower	10 A	**NX-EIC202**

*1. One End Cover NX-END01 is provided with the EtherCAT Coupler Unit.

EtherCAT Coupler Units

NX-series Units on previous pages and NX-series Safety Units can be used by connecting to the EtherCAT Coupler Unit that is connected to the built-in EtherCAT port on the NX1P2 CPU Unit.

Product Name	Communications cycle in DC Mode	Current consumption	Maximum I/O power supply current	Model
EtherCAT Coupler Unit *1 	250 to 4000 μs *2	1.45 W max.	4 A	**NX-ECC201**
	250 to 4000 μs *2		10 A	**NX-ECC202**
	125 to 10000 μs *2	1.25 W max.		**NX-ECC203**

*1. One End Cover NX-END01 is provided with the EtherCAT Coupler Unit.
*2. This depends on the specifications of the EtherCAT master. For example, the values are as follows when the EtherCAT Coupler Unit is connected to the built-in EtherCAT port on an NJ5-series CPU Unit: 500 μs, 1,000 μs, 2,000 μs, and 4,000 μs. Refer to the *NJ/NX-series CPU Unit Built-in EtherCAT Port User' Manual* (Cat. No. W505) for the specifications of the built-in EtherCAT ports on NJ/NX-series CPU Units. This also depends on the unit configuration.

Safety CPU Units

Appearance	Specification					Model
	Maximum number of safety I/O points	Program capacity	Number of safety master connections	I/O refreshing method	Unit version	
	256 points	512 KB	32	Free-Run refreshing	Ver.1.1	**NX-SL3300**
	1024 points	2048 KB	128	Free-Run refreshing	Ver.1.1	**NX-SL3500**

Note: Connect the Safety CPU Unit to the NX1P2 CPU Unit via the EtherCAT Coupler Unit.

Safety Input Units

Appearance	Specification								Model
	Number of safety input points	Number of test output points	Internal I/O common	Rated input voltage	OMRON special safety input devices	Number of safety slave connections	I/O refreshing method	Unit version	
	4 points	2 points	Sinking inputs (PNP)	24 VDC	Can be connected.	1	Free-Run refreshing	Ver.1.1	**NX-SIH400**
	8 points	2 points	Sinking inputs (PNP)	24 VDC	Cannot be connected.	1	Free-Run refreshing	Ver.1.0	**NX-SID800**

Note: Connect the Safety Input Unit to the NX1P2 CPU Unit via the EtherCAT Coupler Unit.

Safety Output Units

Appearance	Specification							Model
	Number of Model safety output points	Internal I/O common	Maximum load current	Rated voltage	Number of safety slave connections	I/O refreshing method	Unit version	
	2 points	Sourcing outputs (PNP)	2.0 A/point, 4.0 A/Unit at 40°C, and 2.5A/Unit at 55°C The maximum load current depends on the installation orientation and ambient temperature.	24 VDC	1	Free-Run refreshing	Ver.1.0	**NX-SOH200**
	4 points	Sourcing outputs (PNP)	0.5 A/point and 2.0 A/Unit	24 VDC	1	Free-Run refreshing	Ver.1.0	**NX-SOD400**

Note: Connect the Safety Output Unit to the NX1P2 CPU Unit via the EtherCAT Coupler Unit.

NX Unit Power Supply System

Add one or more NX-PF Additional I/O Power Supply Units when I/O power is supplied from the NX bus to NX Units connected to the CPU Unit. Check the table below.

NX Units	Model	NX-PF Additional I/O Power Supply Unit required
Digital Input Units	NX-ID3317	Yes
	NX-ID3343	Yes
	NX-ID3344	Yes
	NX-ID3417	Yes
	NX-ID3443	Yes
	NX-ID3444	Yes
	NX-ID4342	Yes
	NX-ID4442	Yes
	NX-ID5342	Yes
	NX-ID5442	Yes
	NX-ID6342	Yes
	NX-ID6442	Yes
	NX-ID5142-1	No
	NX-ID5142-5	No
	NX-ID6142-5	No
	NX-ID6142-6	No
	NX-IA3117	No
Digital output Units	NX-OD2154	Yes
	NX-OD2258	Yes
	NX-OD3121	Yes
	NX-OD3153	Yes
	NX-OD3256	Yes
	NX-OD3257	Yes
	NX-OD3268	No
	NX-OD4121	Yes
	NX-OD4256	Yes
	NX-OD5121	Yes
	NX-OD5256	Yes
	NX-OD6121	Yes
	NX-OD6256	Yes
	NX-OD5121-1	No
	NX-OD5256-1	No
	NX-OD5121-5	No
	NX-OD5256-5	No
	NX-OD6121-5	No
	NX-OD6256-5	No
	NX-OD6121-6	No
	NX-OC2633	No
	NX-OC2733	No
	NX-OC4633	No
Digital Mixed I/O Units	NX-MD6121-5	No
	NX-MD6256-5	No
	NX-MD6121-6	No
High-speed Analog Input Units	NX-HAD401	Yes
	NX-HAD402	Yes
Analog Input Units	NX-AD2603	Yes
	NX-AD2604	No
	NX-AD2608	No
	NX-AD3603	Yes
	NX-AD3604	No
	NX-AD3608	No
	NX-AD4603	Yes
	NX-AD4604	No
	NX-AD4608	No
	NX-AD2203	Yes
	NX-AD2204	No
	NX-AD2208	No
	NX-AD3203	Yes
	NX-AD3204	No

NX Units	Model	NX-PF Additional I/O Power Supply Unit required
Analog Input Units	NX-AD3208	No
	NX-AD4203	Yes
	NX-AD4204	No
	NX-AD4208	No
Analog Output Units	NX-DA2603	Yes
	NX-DA2605	Yes
	NX-DA3603	Yes
	NX-DA3605	Yes
	NX-DA2203	Yes
	NX-DA2205	Yes
	NX-DA3203	Yes
	NX-DA3205	Yes
Temperature Control Units	NX-TC2405	Yes
	NX-TC2406	Yes
	NX-TC2407	Yes
	NX-TC2408	Yes
	NX-TC3405	Yes
	NX-TC3406	Yes
	NX-TC3407	Yes
	NX-TC3408	Yes
Temperature Input Units	NX-TS2101	No
	NX-TS3101	No
	NX-TS2102	No
	NX-TS3102	No
	NX-TS2104	No
	NX-TS3104	No
	NX-TS2201	No
	NX-TS3201	No
	NX-TS2202	No
	NX-TS3202	No
	NX-TS2204	No
	NX-TS3204	No
Heater Burnout Detection Units	NX-HB3101	Yes
	NX-HB3201	Yes
Load Cell Input Unit	NX-RS1201	No
Position interface: Incremental Encoder Input Units	NX-EC0112	Yes
	NX-EC0122	Yes
	NX-EC0132	Yes
	NX-EC0142	Yes
	NX-EC0212	Yes
	NX-EC0222	Yes
Position interface: SSI Input Units	NX-ECS112	Yes
	NX-ECS212	Yes
Position interface: Pulse Output Units	NX-PG0112	Yes
	NX-PG0122	Yes
	NX-PG0232-5	No
	NX-PG0242-5	No
	NX-PG0332-5	No
	NX-PG0342-5	No
Communications Interface Units	NX-CIF101	No
	NX-CIF105	No
	NX-CIF210	No
RFID Units	NX-V680C1	Yes
	NX-V680C2	Yes
IO-Link Master Unit	NX-ILM400	Yes

Note: Refer to the *NX-series NX1P2 CPU Unit Hardware User's Manual* (Cat. No. W578) for the NX Unit power supply system.

Automation Software Sysmac Studio

The Sysmac Studio is the software that provides an integrated environment for setting, programming, debugging and maintenance of machine automation controllers including the NJ/NX-series CPU Units, NY-series Industrial PC, EtherCAT Slave, and the HMI.

For details, refer to your local OMRON website and *Sysmac Studio Catalog* (Cat. No. P138).

Collection of software functional components Sysmac Library

Please download it from following URL and install to Sysmac Studio.

https://www.ia.omron.com/sysmac_library/

Typical Models

Product	Features	Model
Vibration Suppression Library	The Vibration Suppression Library is used to suppress residual vibration caused by the operation of machines.	**SYSMAC-XR006**
Device Operation Monitor Library	The Device Operation Monitor Library is used to monitor the operation of devices such as air cylinders, sensors, motors, and other devices.	**SYSMAC-XR008**
Dimension Measurement Library	The Dimension Measurement Library is used to dimension measurement with ZW-8000/7000/5000 Confocal Fiber Displacement Sensor, or E9NC-TA0 Contact-Type Smart Sensor.	**SYSMAC-XR014**

Recommended EtherCAT and EtherNet/IP Communications Cables

Use Straight STP (shielded twisted-pair) cable of category 5 or higher with double shielding (braiding and aluminum foil tape) for EtherCAT.
For EtherNet/IP, required specification for the communications cables varies depending on the baud rate.
For 100BASE-TX/10BASE-T, use an STP (shielded twisted-pair) cable of Ethernet category 5 or higher.

Cable with Connectors

Item		Recommended manufacturer	Cable length (m)	Model
Wire Gauge and Number of Pairs: AWG26, 4-pair Cable Cable Sheath material: PUR	Cable with Connectors on Both Ends (RJ45/RJ45) Standard RJ45 plug type *1 Cable color: Yellow *2 EtherCAT/ EtherNet/IP (10BASE/100BASE/1000BASE *4) 	OMRON	0.3	XS6W-6PUR8SS30CM-YF
			0.5	XS6W-6PUR8SS50CM-YF
			1	XS6W-6PUR8SS100CM-YF
			2	XS6W-6PUR8SS200CM-YF
			3	XS6W-6PUR8SS300CM-YF
			5	XS6W-6PUR8SS500CM-YF
Wire Gauge and Number of Pairs: AWG22, 2-pair cable	Cable with Connectors on Both Ends (RJ45/RJ45) Rugged RJ45 plug type *1 Cable color: Light blue EtherCAT/ EtherNet/IP (10BASE/100BASE) 	OMRON	0.3	XS5W-T421-AMD-K
			0.5	XS5W-T421-BMD-K
			1	XS5W-T421-CMD-K
			2	XS5W-T421-DMD-K
			5	XS5W-T421-GMD-K
			10	XS5W-T421-JMD-K
	Cable with Connectors on Both Ends (M12 Straight/M12 Straight) Shield Strengthening Connector cable *3 M12/Smartclick Connectors Cable color: Black EtherCAT/ EtherNet/IP (10BASE/100BASE) 	OMRON	0.5	XS5W-T421-BM2-SS
			1	XS5W-T421-CM2-SS
			2	XS5W-T421-DM2-SS
			3	XS5W-T421-EM2-SS
			5	XS5W-T421-GM2-SS
			10	XS5W-T421-JM2-SS
	Cable with Connectors on Both Ends (M12 Straight/RJ45) Shield Strengthening Connector cable *3 M12/Smartclick Connectors Rugged RJ45 plug type Cable color: Black EtherCAT/ EtherNet/IP (10BASE/100BASE) 	OMRON	0.5	XS5W-T421-BMC-SS
			1	XS5W-T421-CMC-SS
			2	XS5W-T421-DMC-SS
			3	XS5W-T421-EMC-SS
			5	XS5W-T421-GMC-SS
			10	XS5W-T421-JMC-SS

*1. Cables with standard RJ45 plugs are available in the following lengths: 0.2 m, 0.3 m, 0.5 m, 1 m, 1.5 m, 2 m, 3 m, 5 m, 7.5 m, 10 m, 15 m, 20 m.
Cables with rugged RJ45 plugs are available in the following lengths: 0.3 m, 0.5 m, 1 m, 2 m, 3 m, 5 m, 10 m, 15 m.
For details, refer to the *Industrial Ethernet Connectors Catalog* (Cat. No. G019).
*2. Cable colors are available in yellow, green, and blue.
*3. For details, contact your OMRON representative.
*4. The products can be used only with the NX701/NX502.

Cables / Connectors

Item			Recommended manufacturer	Model
Products for EtherCAT or EtherNet/IP (1000BASE-T *2/100BASE-TX)	Wire Gauge and Number of Pairs: AWG24, 4-pair Cable	Cables	Kuramo Electric Co.	KETH-SB *1
		RJ45 Connectors	Panduit Corporation	MPS588-C *1
Products for EtherCAT or EtherNet/IP (100BASE-TX/10BASE-T)	Wire Gauge and Number of Pairs: AWG22, 2-pair Cable	Cables	Kuramo Electric Co.	KETH-PSB-OMR *3
			JMACS Japan Co., Ltd.	PNET/B *3
		RJ45 Assembly Connector 	OMRON	XS6G-T421-1 *3

*1. We recommend you to use the above Cable and RJ45 Connector together.
*2. The products can be used only with the NX701/NX502.
*3. We recommend you to use the above Cable and RJ45 Assembly Connector together.

Optional Products/Maintenance Products/DIN Track Accessories

Product Name	Specification		Model
EtherCAT junction slaves *1	3 ports. Power supply voltage: 20.4 to 28.8 VDC (24 VDC -15 to +20%). Current consumption (A): 0.08		**GX-JC03**
	6 ports. Power supply voltage: 20.4 to 28.8 VDC (24 VDC -15 to +20%). Current consumption (A): 0.17		**GX-JC06**
Industrial Switching Hubs for EtherNet/IP and Ethernet *2	Quality of Service (QoS): EtherNet/IP control data priority 10/100BASE-TX, Auto-Negotiation	5 ports. Current consumption (A): 0.07 Power supply connector included.	**W4S1-05D**
Memory Cards *3	SD memory card, 2 GB		**HMC-SD292**
	SDHC memory card, 4 GB		**HMC-SD492**
	SDHC memory card, 16GB		**HMC-SD1A2**
Battery	The battery is not mounted when the product is shipped. To turn OFF the power supply to the equipment for a certain period of time by using the clock data for programming, event logs, etc., you need a separately-sold battery to retain the clock data. Refer to the *Battery* page for details.		**CJ1W-BAT01**
End Cover (For NX1P2 CPU Unit) *4	Must be connected to the right end of the CPU Rack. One End Cover is provided with the CPU Unit.		**NX-END02**
End Cover (For EtherCAT Coupler Unit) *4	One End Cover is provided with the EtherCAT Coupler Unit.		**NX-END01**
DIN Tracks	Length: 0.5 m; Height: 7.3 mm		**PFP-50N**
	Length: 1 m; Height: 7.3 mm		**PFP-100N**
End Plate	There are 2 stoppers provided with CPU Units and I/O Interface Units as standard accessories to secure the Units on the DIN Track.		**PFP-M**
Unit/Terminal Block Coding Pins	For 10 Units (Terminal Block: 30 pins, Unit: 30 pins)		**NX-AUX02**
DIN Track Insulation Spacers	A Spacer to insulate the control panel from the DIN Track. To insulate the EtherCAT Slave Terminal from the control panel, use Din Track Insulation Spacers.		**NX-AUX01**

Product Name	Specification				Model
	No. of terminals	Terminal number indications	Ground terminal mark	Terminal current capacity	
Terminal Blocks	8	A/B	None	10 A	**NX-TBA082**
	12	A/B			**NX-TBA122**
	16	A/B			**NX-TBA162**
	16	C/D			**NX-TBB162**
	12	C/D			**NX-TBB122**
	16	C/D			**NX-TBB162**
	8	A/B	Provided		**NX-TBC082**
	16	A/B			**NX-TBC162**

*1. EtherCAT junction slaves cannot be used for EtherNet/IP and Ethernet.
*2. Industrial switching hubs cannot be used for EtherCAT.
*3. There are restrictions on the combination of CPU Unit version and memory card. Refer to NJ/NX-series CPU Unit Software User's Manual (W501) *8-5-2 Specifications of Supported SD Memory Cards, Folders, and Files* for details.
*4. Use the NX-END02 End Cover only for the CPU Unit and the NX-END01 End Cover only for the EtherCAT Coupler Unit.

Electrical and Mechanical Specifications

Item		Specification	
Model		NX1P2-1□40DT□	NX1P2-9024DT□
Enclosure		Mounted in a panel	
Dimensions (mm) *1		154 × 100 × 71 mm (W×H×D)	130 × 100 × 71 mm (W×H×D)
Weight *2		NX1P2-1□40DT: 650 g NX1P2-1□40DT1: 660 g	NX1P2-9024DT: 590 g NX1P2-9024DT1: 590 g
Unit power supply	**Power supply voltage**	24 VDC (20.4 to 28.8 VDC)	
	Unit power consumption *3	NX1P2-1□40DT: 7.05 W NX1P2-1□40DT1: 6.85 W	NX1P2-9024DT: 6.70 W NX1P2-9024DT1: 6.40 W
	Inrush current *4	For cold start at room temperature: 10 A max./0.1 ms max. and 2.5 A max./150 ms max.	
	Current capacity of power supply terminal *5	4 A max.	
	Isolation method	No isolation: between the Unit power supply terminal and internal circuit	
Power supply to the NX Unit power supply	**NX Unit power supply capacity**	10 W max.	
	NX Unit power supply efficiency	80 %	
	Isolation method	No isolation: between the Unit power supply terminal and NX Unit power supply	
I/O Power Supply to NX Units		Not provided *6	
External connection terminals	**Communication connector**	RJ45 for EtherNet/IP Communications × 1 RJ45 for EtherCAT Communications × 1	
	Screwless clamping terminal block	For Unit power supply input, grounding, and input signal: 1 (Removable) For output signal: 1 (Removable)	
	Output terminal (service supply)	Not provided	
	RUN output terminal	Not provided	
	NX bus connector	8 NX Units can be connected	
	Option board slot	2	1

*1. Includes the End Cover, and does not include projecting parts.
*2. Includes the End Cover. The weight of the End Cover is 82 g.
*3. Includes the SD Memory Card and Option Board. The NX Unit power consumption to NX Units is not included.
*4. The inrush current may vary depending on the operating condition and other conditions. Therefore, select fuses, breakers, and external power supply devices that have enough margin in characteristic and capacity, considering the condition under which the devices are used.
*5. The amount of current that can be passed constantly through the terminal. Do no exceed this current value when you use a through-wiring for the Unit power supply.
*6. When the type of the I/O power supply to NX Units you use is the supply from NX bus, an Additional I/O Power Supply Unit is required. The maximum I/O power supply current from an Additional I/O Power Supply Unit is 4 A. Refer to the *NX-series NX1P2 CPU Unit Hardware User's Manual* (Cat. No. W578) for details.

General Specifications

Item		Specification
Enclosure		Mounted in a panel
Grounding method		Ground to less than 100 Ω.
Operating environment	**Ambient operating temperature**	0 to 55°C
	Ambient operating humidity	10% to 95% (with no condensation)
	Atmosphere	Must be free from corrosive gases.
	Ambient storage temperature	-25 to 70°C (excluding battery)
	Altitude	2,000 m max.
	Pollution degree	2 or less: Meets IEC 61010-2-201.
	Noise immunity	2 kV on power supply line (Conforms to IEC 61000-4-4.)
	Overvoltage category	Category II: Meets IEC 61010-2-201.
	EMC immunity level	Zone B
	Vibration resistance	Conforms to IEC 60068-2-6. 5 to 8.4 Hz with 3.5-mm amplitude, 8.4 to 150 Hz, acceleration of 9.8 m/s^2 100 min each in X, Y, and Z directions (10 sweeps of 10 min each = 100 min total)
	Shock resistance	Conforms to IEC 60068-2-27. 147 m/s^2, 3 times in X, Y, and Z directions
Battery	**Life**	5 years (Power ON time rate 0% (power OFF))
	Model	CJ1W-BAT01 (sold separately)
Applicable standards *1		cULus, EU, UKCA, RCM, KC, NK, LR

*1. Refer to the OMRON website (https://www.ia.omron.com/) or consult your OMRON representative for the most recent applicable standards for each model.

Performance Specifications

Item				NX1P2-		
				11□□□□/ 11□□□□1	10□□□□/ 10□□□□1	90□□□□/ 90□□□□1
Processing time	Instruction execution times	LD instruction		3.3 ns		
		Math instructions (for long real data)		70 ns or more		
Programming	Program capacity *1	Size		1.5 MB		
		Quantity	Number of POU definitions	450		
			Number of POU Instances	1,800		
	Memory capacity for variables *2	Retain attributes	Size	32 kB		
			Number of variables	5,000		
		No Retain attributes	Size	2 MB		
			Number of variables	90,000		
	Data types	Number of data types		1,000		
	Memory for CJ-series Units (Can be specified with AT specifications for variables.)	CIO Area		0 to 6,144 channel (0 to 6,143) *3		
		Work Area		0 to 512 channel (W0 to W511) *3		
		Holding Area		0 to 1,536 channel (H0 to H1,535) *4		
		DM Area		0 to 16,000 channel (D0 to F15,999) *4		
		EM Area		---		
Motion control	Number of controlled axes *5	Maximum number of controlled axes		12 axes	10 axes	4 axes
			Motion control axes	8 axes	6 axes	---
			Single-axis position control axes	4 axes	4 axes	4 axes
		Maximum number of used real axes		8 axes	6 axes	4 axes
			Used motion control servo axes	4 axes	2 axes	---
			Used single-axis position control servo axes	4 axes	4 axes	4 axes
		Maximum number of axes for linear interpolation axis control		4 axes per axes group		---
		Number of axes for circular interpolation axis control		2 axes per axes group		---
	Maximum number of axes groups			8 axes groups		---
	Motion control period			Same as the period for primary periodic task		
	Cams	Number of cam data points	Maximum points per cam table	65,535 points		---
			Maximum points for all cam tables	262,140 points		---
		Maximum number of cam tables		80 tables		---
	Position units			Pulse, mm, μm, nm, degree, and inch		
	Override factors			0.00% or 0.01% to 500.00%		
Built-in EtherNet/IP port	Number of ports			1		
	Physical layer			10BASE-T, 100BASE-TX		
	Frame length			1,514 bytes max.		
	Media access method			CSMA/CD		
	Modulation			Baseband		
	Topology			Star		
	Baud rate			100 Mbps/s (100BASE-TX)		
	Transmission media			STP (shielded, twisted-pair) cable of Ethernet category 5, 5e or higher		
	Maximum transmission distance between Ethernet switch and node			100 m		
	Maximum number of cascade connections			There are no restrictions if an Ethernet switch is used.		
	CIP service: Tag data links (cyclic communications)	Maximum number of connections		32		
		Packet interval *6		Can be set for each connection. 2 to 10,000 ms in 1-ms increments		
		Permissible communications band		3,000 pps *7 (including heartbeat)		
		Maximum number of tag sets		32		
		Tag types		Network variables CIO/WR/HR/DM		
		Number of tags per connection (i.e., per tag set)		8 (7 tags if Controller status is included in the tag set.)		
		Maximum number of tags		256		
		Maximum link data size per node (total size for all tags)		19,200 bytes		
		Maximum data size per connection		600 bytes		
		Maximum number of registrable tag sets		32 (1 connection = 1 tag set)		
		Maximum tag set size		600 bytes (Two bytes are used if Controller status is included in the tag set.)		
		Multi-cast packet filter *8		Supported.		

Item				NX1P2-		
				11□□□□/ 11□□□□1	10□□□□/ 10□□□□1	90□□□□/ 90□□□□1
Built-in EtherNet/IP port	CIP message service: Explicit messages	Class 3 (number of connections)		32 (clients plus server)		
		UCMM (non-connection type)	Maximum number of clients that can communicate at one time	32		
			Maximum number of servers that can communicate at one time	32		
	Number of TCP sockets			30		
	Secure Socket Service	Maximum number of Secure Socket		30		
		TLS Version		1.2		
Built-in EtherCAT port	Communications standard			IEC 61158 Type12		
	EtherCAT master specifications			Class B (Feature Pack Motion Control compliant)		
	Physical layer			100BASE-TX		
	Modulation			Baseband		
	Baud rate			100 Mbps (100BASE-TX)		
	Duplex mode			Auto		
	Topology			Line, daisy chain, branching and ring *9		
	Transmission media			Twisted-pair cable of category 5 or higher (double-shielded straight cable with aluminum tape and braiding)		
	Maximum transmission distance between nodes			100 m		
	Maximum number of slaves			16		
	Range of node addresses that can be set			1 to 192		
	Maximum process data size			Input: 1,434 bytes Output: 1,434 bytes *10		
	Maximum process data size per slave			Input: 1,434 bytes Output: 1,434 bytes		
	Communications cycle			2,000 μs to 8,000 μs in 250-μs increments		
	Sync jitter			1 μs max.		
Serial Communications (Serial Communications Option Board)	Communications method			half duplex		
	Synchronization			Start-stop		
	Baud rate			1.2/2.4/4.8/9.6/19.2/38.4/57.6/115.2 kbps		
	Transmission distance			Depends on Option Board.		
	Supported protocol			Host link, Modbus-RTU master, and no-protocol		
Unit configuration	Maximum number of connectable Units	Maximum number of NX Units that can be mounted to the CPU Unit		8		
		Maximum number of NX Units for entire controller		24 On CPU Rack: 8 On EtherCAT Slave Terminals: 16		
	Power supply	Model		A non-isolated power supply for DC input is built into the CPU Unit.		
		Power OFF detection time		2 to 8 ms		
Option Board	Number of slots			2	2	1
Built-in I/O	Input	Number of points		24	24	14
	Output	Number of points		16	16	10
		Load short-circuit protection		11□□DT/10□□DT/9024DT: Not provided (NPN) 11□□DT1/10□□DT1/9024DT1: Provided (PNP)		
Internal clock	Accuracy			At ambient temperature of 55°C: -3.5 to 0.5 min error per month At ambient temperature of 25°C: -1.5 to 1.5 min error per month At ambient temperature of 0°C: -3 to 1 min error per month		
	Retention time of built-in capacitor			At ambient temperature of 40°C: 10 days		

*1. Execution objects and variable tables (including variable names)
*2. Memory used for CJ-series Units is included.
*3. The value can be set in 1 ch increments. The value is included in the total size of variables without a Retain attribute.
*4. The value can be set in 1 ch increments. The value is included in the total size of variables with a Retain attribute.
*5. Refer to the *NJ/NX-series CPU Unit Motion Control User's Manual* (Cat. No. W507) for the description of this term.
*6. Data will be refreshed at the set interval, regardless of the number of nodes.
*7. "pps" means packets per second, i.e., the number of communications packets that can be sent or received in one second.
*8. As the EtherNet/IP port implements the IGMP client, unnecessary multi-cast packets can be filtered by using an Ethernet switch that supports IGMP Snooping.
*9. Ring topology is supported with the project version 1.40 or later.
Slaves on a ring topology should support a ring topology. If Omron slaves, please see the user's manual of slaves.
*10. For project unit version earlier than 1.40, the data must be within one frame.

Function Specifications

Item				NX1P2
Tasks	Function			I/O refresh and the user program are executed in units that are called tasks. Tasks are used to specify execution conditions and execution priority.
		Periodically Executed Tasks	Maximum Number of Primary Periodic Tasks	1
			Maximum Number of Periodic Tasks	2
		Conditionally Executed Tasks	Maximum Number of Event Tasks	32
			Execution Condition	When Activate Event Task instruction is executed or when condition expression for variable is met
	Setup	System Service Monitoring Settings		Not supported
Programming	POUs (programorganization units)	Programs		POUs that are assigned to tasks.
		Function Blocks		POUs that are used to create objects with specific conditions.
		Functions		POUs that are used to create an object that determine unique outputs for the inputs, such as for data processing.
	Programming Languages	Types		Ladder diagrams * and structured text (ST)
	Namespaces			Namespaces are used to create named groups of POU definitions.
	Variables	External Access of variables	Network Variables	The function which allows access from the HMI, host computers, or other Controllers
	Data Types	Data types	Boolean	BOOL
			Bit Strings	BYTE, WORD, DWORD, LWORD
			Integers	INT, SINT, DINT, LINT, UINT, USINT, UDINT, ULINT
			Real Numbers	REAL and LREAL
			Durations	TIME
			Dates	DATE
			Times of Day	TIME_OF_DAY
			Date and Time	DATE_AND_TIME
			Text Strings	STRING
		Derivative Data Types		Structures, Unions, and Enumerations
		Structures	Function	A derivative data type that groups together data with different data types.
			Maximum Number of Members	2048
			Nesting Maximum Levels	8
			Member Data Types	Basic data types, structures, unions, enumerations, array variables
			Specifying Member Offsets	You can use member offsets to place structure members at any memory locations.
		Union	Function	A derivative data type that enables access to the same data with different data types.
			Maximum Number of Members	4
			Member Data Types	BOOL, BYTE, WORD, DWORD, and LWORD
		Enumeration	Function	A derivative data type that uses text strings called enumerators to express variable values.
	Data Type Attributes	Array Specifications	Function	An array is a group of elements with the same data type. You specify the number (subscript) of the element from the first element to specify the element.
			Maximum Number of Dimensions	3
			Maximum Number of Elements	65535
			Array Specifications for FB Instances	Supported
		Range Specifications		You can specify a range for a data type in advance. The data type can take only values that are in the specified range.
		Libraries		You can use user libraries.
Motion Control	Control Modes			Position control, Velocity control, and Torque control
	Axis Types			Servo axes, Virtual servo axes, Encoder axes, and Virtual encoder axes
	Positions that can be managed			Command positions and actual positions

Item				NX1P2
Motion Control	Single Axes	Single-Axis Position Control	Absolute Positioning	Positioning is performed for a target position that is specified with an absolute value.
			Relative Positioning	Positioning is performed for a specified travel distance from the command current position.
			Interrupt Feeding	Positioning is performed for a specified travel distance from the position where an interrupt input was received from an external input.
			Cyclic Synchronous Absolute Positioning	A positioning command is output each control period in Position Control Mode.
		Single-axis Velocity Control	Velocity Control	Velocity control is performed in Position Control Mode.
			Cyclic Synchronous Velocity Control	A velocity command is output each control period in Velocity Control Mode.
		Single-axis Torque Control	Torque Control	The torque of the motor is controlled.
		Single-axis Synchronized Control	Starting Cam Operation	A cam motion is performed using the specified cam table.
			Ending Cam Operation	The cam motion for the axis that is specified with the input parameter is ended.
			Starting Gear Operation	A gear motion with the specified gear ratio is performed between a master axis and slave axis.
			Positioning Gear Operation	A gear motion with the specified gear ratio and sync position is performed between a master axis and slave axis.
			Ending Gear Operation	The specified gear motion or positioning gear motion is ended.
			Synchronous Positioning	Positioning is performed in sync with a specified master axis.
			Master Axis Phase Shift	The phase of a master axis in synchronized control is shifted.
			Combining Axes	The command positions of two axes are added or subtracted and the result is output as the command position.
		Single-axis Manual Operation	Powering the Servo	The Servo in the Servo Drive is turned ON to enable axis motion.
			Jogging	An axis is jogged at a specified target velocity.
		Auxiliary Functions for Single-axis Control	Resetting Axis Errors	Axes errors are cleared.
			Homing	A motor is operated and the limit signals, home proximity signal, and home signal are used to define home.
			Homing with specified parameters	The parameters are specified, the motor is operated, and the limit signals, home proximity signal, and home signal are used to define home.
			High-speed Homing	Positioning is performed for an absolute target position of 0 to return to home.
			Stopping	An axis is decelerated to a stop.
			Immediately Stopping	An axis is stopped immediately.
			Setting Override Factors	The target velocity of an axis can be changed.
			Changing the Current Position	The command current position or actual current position of an axis can be changed to any position.
			Enabling External Latches	The position of an axis is recorded when a trigger occurs.
			Disabling External Latches	The current latch is disabled.
			Zone Monitoring	You can monitor the command position or actual position of an axis to see when it is within a specified range (zone).
			Enabling Digital Cam Switches	You can turn a digital output ON and OFF according to the position of an axis
			Monitoring Axis Following Error	You can monitor whether the difference between the command positions or actual positions of two specified axes exceeds a threshold value.
			Resetting the Following Error	The error between the command current position and actual current position is set to 0.
			Torque Limit	The torque control function of the Servo Drive can be enabled or disabled and the torque limits can be set to control the output torque.
			Slave Axis Position Compensation	This function compensates the position of the slave axis currently in synchronized control.
			Cam monitor	Outputs the specified offset position for the slave axis in synchronous control.
			Start Velocity	You can set the initial velocity when axis motion starts.

Item				NX1P2
Motion Control	Axes Groups	Multi-axes Coordinated Control	Absolute Linear Interpolation	Linear interpolation is performed to a specified absolute position.
			Relative Linear Interpolation	Linear interpolation is performed to a specified relative position.
			Circular 2D Interpolation	Circular interpolation is performed for two axes.
			Axes Group Cyclic Synchronous Absolute Positioning	A positioning command is output each control period in Position Control Mode.
		Auxiliary Functions for Multi-axes Coordinated Control	Resetting Axes Group Errors	Axes group errors and axis errors are cleared.
			Enabling Axes Groups	Motion of an axes group is enabled.
			Disabling Axes Groups	Motion of an axes group is disabled.
			Stopping Axes Groups	All axes in interpolated motion are decelerated to a stop.
			Immediately Stopping Axes Groups	All axes in interpolated motion are stopped immediately.
			Setting Axes Group Override Factors	The blended target velocity is changed during interpolated motion.
			Reading Axes Group Positions	The command current positions and actual current positions of an axes group can be read.
			Changing the Axes in an Axes Group	The Composition Axes parameter in the axes group parameters can be overwritten temporarily.
	Common Items	Cams	Setting Cam Table Properties	The end point index of the cam table that is specified in the input parameter is changed.
			Saving Cam Tables	The cam table that is specified with the input parameter is saved in non-volatile memory in the CPU Unit.
			Generating Cam Tables	The cam table is generated from the cam property and cam node that is specified in input parameters.
		Parameters	Writing MC Settings	Some of the axis parameters or axes group parameters are overwritten temporarily.
			Changing Axis Parameters	You can access and change the axis parameters from the user program.
	Auxiliary Functions	Count Modes		You can select either Linear Mode (finite length) or Rotary Mode (infinite length).
		Unit Conversions		You can set the display unit for each axis according to the machine.
		Acceleration/ Deceleration Control	Automatic Acceleration/ Deceleration Control	Jerk is set for the acceleration/deceleration curve for an axis motion or axes group motion.
			Changing the Acceleration and Deceleration Rates	You can change the acceleration or deceleration rate even during acceleration or deceleration.
		In-Position Check		You can set an in-position range and in-position check time to confirm when positioning is completed.
		Stop Method		You can set the stop method to the immediate stop input signal or limit input signal.
		Re-execution of Motion Control Instructions		You can change the input variables for a motion control instruction during execution and execute the instruction again to change the target values during operation.
		Multi-execution of Motion Control Instructions (Buffer Mode)		You can specify when to start execution and how to connect the velocities between operations when another motion control instruction is executed during operation.
		Continuous Axes Group Motions (Transition Mode)		You can specify the Transition Mode for multi-execution of instructions for axes group operation.
		Monitoring Functions	Software limits	The movement range of an axis is monitored.
			Following Error	The error between the command current value and the actual current value is monitored for each axis.
			Velocity, Acceleration Rate, Deceleration Rate, Torque, Interpolation Velocity, Interpolation Acceleration Rate, and Interpolation Dceleration Rate	You can set and monitor warning values for each axis and each axes group.
		Absolute Encoder Support		You can use an OMRON 1S-series Servomotor or G5-series Servomotor with an Absolute Encoder to eliminate the need to perform homing at startup.
		Input Signal Logic Inversion		You can inverse the logic of immediate stop input signal, positive limit input signal, negative limit input signal, or home proximity input signal.

Item				NX1P2
Motion Control	External Interface Signals			The Servo Drive input signals listed on the right are used. Home signal, home proximity signal, positive limit signal, negative limit signal, immediate stop signal, and interrupt input signal
Unit (I/O) Management	EtherCAT slaves	Maximum Number of Slaves		16
	CJ-Series Units	Maximum Number of Units		Not supported
Communications	Peripheral USB Port			Not supported
	Built-in EtherNet/IP Port	Communications Protocol		TCP/IP and UDP/IP
		CIP Communications Service	Tag Dta Links	Programless cyclic data exchange is performed with the devices on the EtherNet/IP network.
			Message Communications	CIP commands are sent to or received from the devices on the EtherNet/IP network.
		TCP/IP Applications	Socket Services	Data is sent to and received from any node on Ethernet using the UDP or TCP protocol. Socket communications instructions are used.
			Secure Socket service (Client)	Establishes a TLS session with the TCP protocol, and sends and receives arbitrary data to and from the server and any node on the Ethernet using instructions for secure socket communication.
			FTP Client	Files are transferred via FTP from the CPU Unit to computers or Controllers at other Ethernet nodes. FTP client communications instructions are used.
			FTP Server	Files can be read from or written to the SD Memory Card in the CPU Unit from computers at other Ethernet nodes.
			Automatic Clock Adjustment	Clock information is read from the NTP server at the specified time or at a specified interval after the power supply to the CPU Unit is turned ON. The internal clock time in the CPU Unit is updated with the read time.
			SNMP Agent	Built-in EtherNet/IP port internal status information is provided to network management software that uses an SNMP manager.
	EtherCAT Port	Supported Services	Process Data Communications	A communications method to exchange control information in cyclic communications between the EtherCAT master and slaves. This communications method is defined by CoE.
			SDO Communications	A communications method to exchange control information in noncyclic event communications between EtherCAT master and slaves. This communications method is defined by CoE.
		Network Scanning		Information is read from connected slave devices and the slave configuration is automatically generated.
		DC (Distributed Clock)		Time is synchronized by sharing the EtherCAT system time among all EtherCAT devices (including the master).
		Enable/Disable Settings for Slaves		The slaves can be enabled or disabled as communications targets.
		Disconnecting/Connecting Slaves		Temporarily disconnects a slave from the EtherCAT network for maintenance, such as for replacement of the slave, and then connects the slave again.
		Supported Application Protocol	CoE	SDO messages of the CAN application can be sent to slaves via EtherCAT
	Serial Communication	Protocol		Host link (FINS), no-protocol, and Modbus-RTU master (when connected to the Serial Communications Option Board)
	Communications Instructions			FTP client instructions, CIP communications instructions, socket communications instructions, SDO message instructions, noprotocol communications instructions, and Modbus RTU protocol instructions
Operation Management	RUN Output Contacts			Not supported
System Management	Event Logs	Function		Events are recorded in the logs
	Maximum Number of Events	System Event Log		576 *2
		Access Event Log		528 *3
		User-defined Event Log		512
Debugging	Online Editing	Single		Programs, function blocks, functions, and global variables can be changed online. More than one operators can change POUs individually via network.
	Forced Refreshing			The user can force specific variables to TRUE or FALSE.
		Maximum Number of Forced Variables	Device Variables for EtherCAT Slaves	64
			Device Variables for CJ-series Units and Variables with AT Specifications	Not supported
	MC Test Run			Motor operation and wiring can be checked from the Sysmac Studio.
	Synchronizing			The project file in the Sysmac Studio and the data in the CPU Unit can be made the same when online.
	Differentiation Monitoring			You can monitor when a variable changes to TRUE or changes to FALSE.
		Maximum Number of Contacts		8

Item				NX1P2
Debugging	Data Tracing	Types	Single Triggered Trace	When the trigger condition is met, the specified number of samples are taken and then tracing stops automatically.
			Continuous Trace	Data tracing is executed continuously and the trace data is collected by the Sysmac Studio.
		Maximum Number of Simultaneous Data Traces		2
		Maximum Number of Records		10000
		Maximum Number of Sampled Variables		48 variables
		Timing of Sampling		Sampling is performed for the specified task period, at the specified time, or when a sampling instruction is executed.
		Triggered Traces		Trigger conditions are set to record data before and after an event.
			Trigger Conditions	When BOOL variable changes to TRUE or FALSE Comparison of non-BOOL variable with a constant Comparison Method: Equals (=), Greater than (>), Greater than or equals (≥), Less Than (<), Less than or equals (≤), Not equal (≠)
			Delay	Trigger position setting: A slider is used to set the percentage of sampling before and after the trigger condition is met.
	Simulation			The operation of the CPU Unit is emulated in the Sysmac Studio.
Reliability functions	Self-Diagnosis	Controller Errors	Levels	Major faults, partial faults, minor faults, observation, and information
			Maximum number of message languages	9 (Sysmac Studio) 2 (NS-series PT)
		User-defined Errors	Function	User-defined errors are registered in advance and then records are created by executing instructions.
			Levels	8
			Maximum number of message languages	9
Security	Protecting Software Assets and Preventing Operating Mistakes	CPU Unit Names and Serial IDs		When going online to a CPU Unit from the Sysmac Studio, the CPU Unit name in the project is compared to the name of the CPU Unit being connected to.
		Protection	User Program Transfer with no Restoration Information	You can prevent reading data in the CPU Unit from the Sysmac Studio.
			CPU Unit Write Protection	You can prevent writing data to the CPU Unit from the Sysmac Studio or SD Memory Card.
			Overall Project File Protection	You can use passwords to protect .smc files from unauthorized opening on the Sysmac Studio.
			Data Protection	You can use passwords to protect POUs on the Sysmac Studio.
		Verification of Operation Authority		Online operations can be restricted by operation rights to prevent damage to equipment or injuries that may be caused by operating mistakes.
			Number of Groups	5
		Verification of User Program Execution ID		The user program cannot be executed without entering a user program execution ID from the Sysmac Studio for the specific hardware (CPU Unit).
SD Memory Card functions	Storage Type			SD Memory Card, SDHC Memory Card
	Application	Automatic Transfer from SD Memory Card		When the power supply to the Controller is turned ON, the data that is stored in the autoload directory of the SD Memory Card is transferred to the Controller.
		Program transfer from SD Memory Card		With the specification of the system-defined variable, you can transfer a program that is stored in the SD Memory Card to the Controller.
		SD Memory Card Operation Instructions		You can access SD Memory Cards from instructions in the user program.
		File Operations from the Sysmac Studio		You can perform file operations for Controller files in the SD Memory Card and read/write general-purpose document files on the computer.
		SD Memory Card Life Expiration Detection		Notification of the expiration of the life of the SD Memory Card is provided in a system-defined variable and event log.
Backing up data	SD Memory Card backups	Operating methods	CPU Unit front panel DIP switch	Backup, verification, and restoration operations are performed by manipulating the front-panel DIP switch on the CPU Unit.
			Specification with system-defined variables	Backup, verification, and restoration operations are performed by manipulating system-defined variables.*4
			SD Memory Card Window in Sysmac Studio	Backup and verification operations are performed from the SD Memory Card Window of the Sysmac Studio.
			Special instruction	The special instruction is used to backup data.
		Protection	Disabling backups to SD Memory Cards	Backing up data to a SD Memory Card is prohibited.
	Sysmac Studio Controller backups			The Sysmac Studio is used to backup, restore, or verify Controller data.

*1. Inline ST is supported. (Inline ST is ST that is written as an element in a ladder diagram.)
*2. This is the total of 512 events for the CPU Unit and 64 events for the NX Unit.
*3. This is the total of 512 events for the CPU Unit and 16 events for the NX Unit.
*4. Restore is supported with unit version 1.14 or later.

Input Terminal Block

Terminal Arrangement

The description is given for each CPU Unit model.

NX1P2-1□40DT□

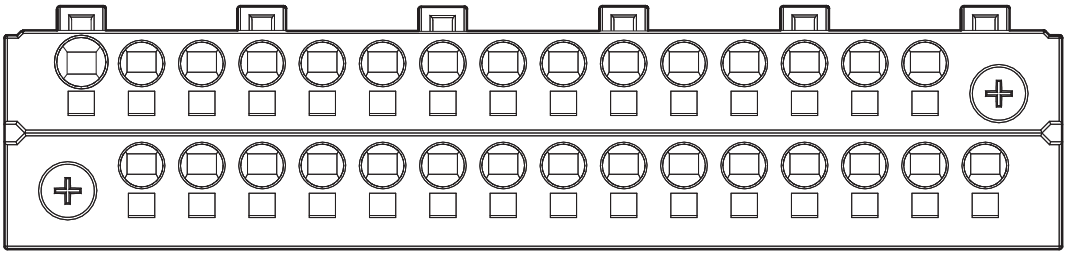

⏚	+	-	COM	01	03	05	07	09	11	13	15	17	19	21	
	+	-	00	02	04	06	08	10	12	14	16	18	20	22	23

Symbol	Terminal name	Description	Reference
⏚	Functional ground terminal	The functional ground terminal. Connect the ground wire to the terminal.	Refer to the *NX-series NX1P2 CPU Unit Hardware User's Manual* (Cat. No. W578) for details.
+/-	Unit power supply terminals	These terminals are connected to the Unit power supply. The + terminals and - terminals are internally connected to each other.	
COM	Common terminal	Common terminal for the input circuits	Refer to the *Input Specifications* page.
00 to 15	Input terminals	General-purpose input A	
16 to 23	Input terminals	General-purpose input B	

NX1P2-9024DT□

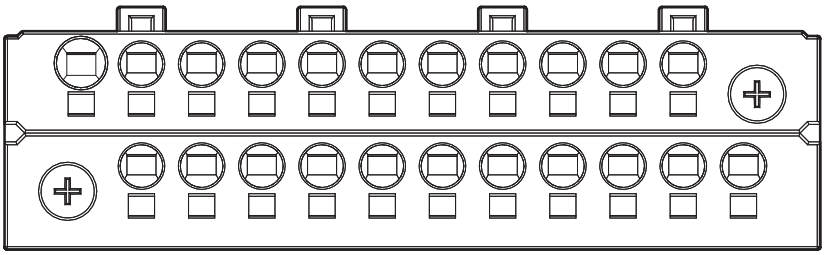

⏚	+	-	COM	01	03	05	07	09	11	13	
	+	-	00	02	04	06	08	10	12	NC	NC

Symbol	Terminal name	Description	Reference
⏚	Functional ground terminal	The functional ground terminal. Connect the ground wire to the terminal.	Refer to the *NX-series NX1P2 CPU Unit Hardware User's Manual* (Cat. No. W578) for details.
+/-	Unit power supply terminals	These terminals are connected to the Unit power supply. The + terminals and - terminals are internally connected to each other.	
COM	Common terminal	Common terminal for the input circuits	Refer to the *Input Specifications* page.
00 to 13	Input terminals	General-purpose input A	
NC	NC	Do not connect anything.	---

Input Specifications

The specifications depends on the input terminal numbers of the model. *1

Item	Specification	
Input type	**General-purpose input A**	**General-purpose input B**
Input terminal number	**NX1P2-1□40DT□: 00 to 15 NX1P2-9024DT□: 00 to 13**	**NX1P2-1□40DT□: 16 to 23 NX1P2-9024DT□: None**
Internal I/O common	For both NPN/PNP	
Input voltage	24 VDC (15 to 28.8 VDC)	
Connected sensor	Two-wire or three-wire sensors	
Input impedance	–––	4.3 kΩ
Input current	4.22 mA	5.3 mA typical
ON voltage	15 VDC min.	
OFF voltage/current	5 VDC max./1 mA max.	
ON response time *2	2.5 μs max.	1 ms max.
OFF response time *2	2.5 μs max.	1 ms max.
ON/OFF filter time *3	No filter, 0.25 ms, 0.5 ms, 1 ms (default), 2 ms, 4 ms, 8 ms, 16 ms, 32 ms, 64 ms, 128 ms, 256 ms	
Circuit configuration	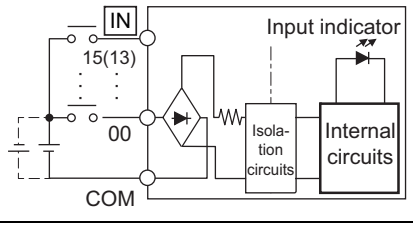	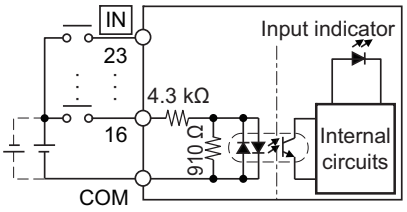

*1. The following specifications apply to models with lot number 18321M (products produced in March 2021) or earlier.

Item	Specification	
Input type	**General-purpose input A**	**General-purpose input B**
Input terminal number	**NX1P2-1□40DT□: 00 to 15 NX1P2-9024DT□: 00 to 13**	**NX1P2-1□40DT□: 16 to 23 NX1P2-9024DT□: None**
Internal I/O common	For both NPN/PNP	
Input voltage	24 VDC (15 to 28.8 VDC)	
Connected sensor	Two-wire or three-wire sensors	
Input impedance	4.0 kΩ	4.3 kΩ
Input current	5.8 mA typical	5.3 mA typical
ON voltage	15 VDC min.	
OFF voltage/current	5 VDC max./1 mA max.	
ON response time *2	2.5 μs max.	1 ms max.
OFF response time *2	2.5 μs max.	1 ms max.
ON/OFF filter time *3	No filter, 0.25 ms, 0.5 ms, 1 ms (default), 2 ms, 4 ms, 8 ms, 16 ms, 32 ms, 64 ms, 128 ms, 256 ms	
Circuit configuration	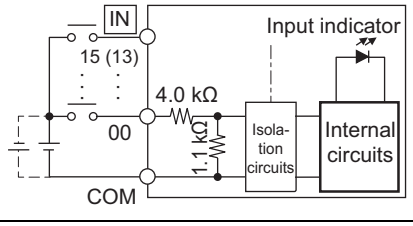	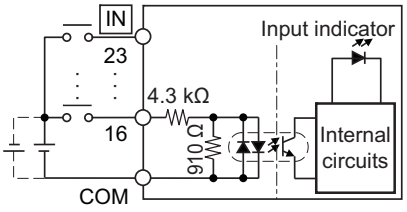

*2. These values are the fixed response time needed by the hardware. A value from 0 to 32 ms (default: 1 ms) that is set on the Support Software is added to these values.
*3. Set the filter time for every 4 points.

Output Terminal Block

Terminal Arrangement

The description is given for each CPU Unit model.

NX1P2-1□40DT

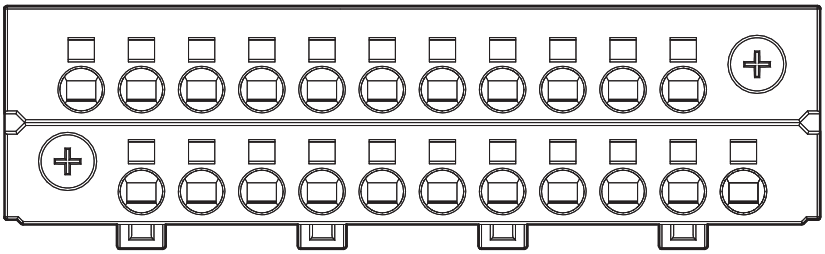

NC	NC	00	02	04	06	NC	08	10	12	14	
	C0 (0V)	01	03	05	07	C1 (0V)	09	11	13	15	NC

Symbol	Terminal name	Description	Reference
C0 (0V), C1 (0V)	Common terminal	Connected to the 0-V side of the I/O power supply. C0 (0V) and C1 (0V) are independent from each other inside the CPU Unit.	Refer to the *Output Specifications* page.
00 to 15	Output terminals	NPN (sinking) type output	
NC	NC	Do not connect anything.	---

NX1P2-1□40DT1

The appearance of the terminal block is the same as NX1P2-1□40DT.

NC	C0 (+V)	00	02	04	06	C1 (+V)	08	10	12	14	
	0V0	01	03	05	07	0V1	09	11	13	15	NC

Symbol	Terminal name	Description	Reference
C0 (+V), C1 (+V)	Common terminal	Connected to the 24-V side of the I/O power supply. C0 (+V) and C1 (+V) are independent from each other inside the CPU Unit.	Refer to the *Output Specifications* page.
0V0, 0V1	0 V terminal	Supplies 0 V for the internal circuits for driving. 0V0 and 0V1 are independent from each other inside the CPU Unit.	
00 to 15	Output terminals	PNP (sourcing) type output with the load short-circuit protection function	
NC	NC	Do not connect anything.	---

NX1P2-9024DT

The appearance of the terminal block is the same as NX1P2-1□40DT.

NC	NC	00	02	04	06	08	NC	NC	NC	NC	
	C0 (0V)	01	03	05	07	09	NC	NC	NC	NC	NC

Symbol	Terminal name	Description	Reference
C0 (0V)	Common terminal	Connected to the 0-V side of the I/O power supply.	Refer to the *Output Specifications* page.
00 to 09	Output terminals	NPN (sinking) type output	
NC	NC	Do not connect anything.	---

NX1P2-9024DT1

The appearance of the terminal block is the same as NX1P2-1□40DT.

NC	C0 (+V)	00	02	04	06	08	NC	NC	NC	NC	
	0V0	01	03	05	07	09	NC	NC	NC	NC	NC

Symbol	Terminal name	Description	Reference
C0 (+V)	Common terminal	Connected to the 24-V side of the I/O power supply.	Refer to the *Output Specifications* page.
0V0	0 V terminal	Supplies 0 V for the internal circuits for driving.	
00 to 09	Output terminals	PNP (sourcing) type output with the load short-circuit protection function	
NC	NC	Do not connect anything.	---

Output Specifications

The models of the CPU Units are divided according to the following two output types: the NPN (sinking) type and PNP (sourcing) type.
There is no difference in specifications between the models with different output terminal numbers.

Item	Specification	
	NX1P2-□□□□DT	**NX1P2-□□□□DT1**
Internal I/O common	NPN (sinking)	PNP (sourcing)
Maximum switching capacity	12 to 24 VDC (10.2 to 28.8 VDC), 300 mA per point	24 VDC (15 to 28.8 VDC), 300 mA per point
	NX1P2-1□40DT□: 1.8 A/common (3.6 A/Unit) NX1P2-9024DT□: 2.4 A/common (2.4 A/Unit)	
Minimum switching capacity	12 to 24 VDC (10.2 to 28.8 VDC), 1 mA	24 VDC (15 to 28.8 VDC), 1 mA
Leakage current	0.1 mA max.	
Residual voltage	1.5 V max.	
ON response time	0.1 ms max.	0.5 ms max.
OFF response time	0.8 ms max.	1.0 ms max.
Current consumption from I/O power supply *1	---	NX1P2-1□40DT1: 40 mA/common NX1P2-9024DT1: 50 mA/common
Load short-circuit protection	Not provided	Provided *2
Circuit configuration	NX1P2-1□40DT 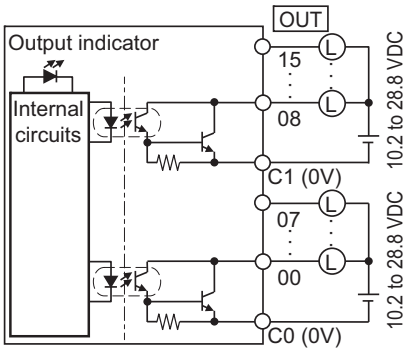	NX1P2-1□40DT1 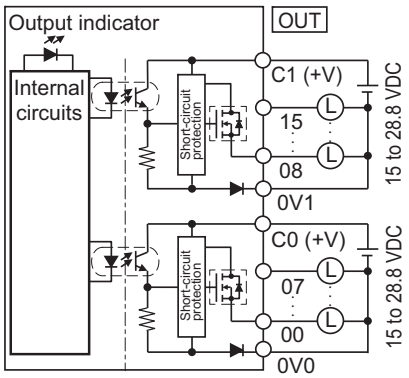
	NX1P2-9024DT 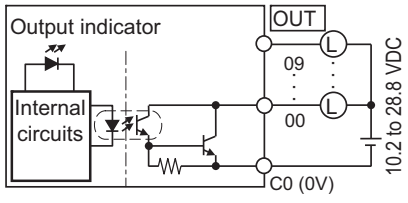	NX1P2-9024DT1 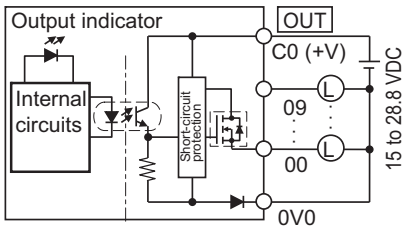

*1. The internally consumed current from I/O power supply. The current flows from the common terminal Cn (+V) to the 0Vn terminal. The current consumption of any external load is excluded.
*2. The load short-circuit protection is provided for each point of the PNP (sourcing) type output terminal. It protects the output circuits when a load short circuit occurs.

Part Names and Functions

CPU Unit

The following two models have the different numbers of the option board slots and built-in I/O points, but the names and functions of their parts are the same. Refer to the *Ordering Information* page for the CPU Unit models and specifications such as the number of built-in I/O points.

NX1P2-1□40□□□

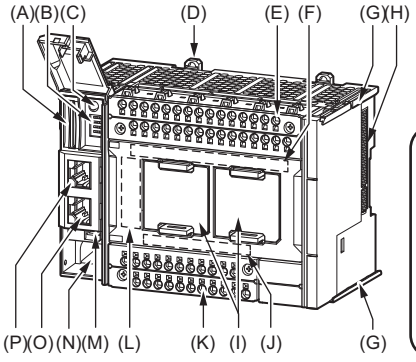

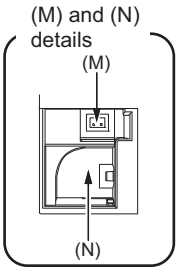

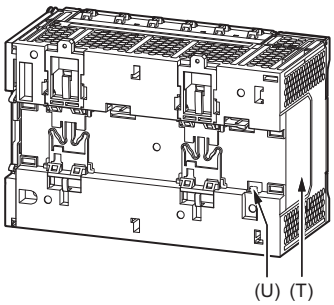

NX1P2-9024□□□

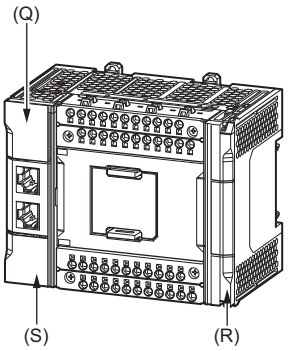

Letter	Name	Function
A	SD Memory Card connector	Connects the SD Memory Card to the CPU Unit.
B	DIP switch	Used in Safe Mode *1 or when backing up data *2. Normally, turn OFF all of the pins.
C	SD Memory Card power supply switch	Turns OFF the power supply so that you can remove the SD Memory Card.
D	DIN Track mounting hook	These hooks are used to mount the Unit to a DIN Track.
E	Input terminal block	This terminal block is used for wiring for the Unit power supply, grounding, and built-in input.
F	Input indicator	Shows the operation status of the built-in input.
G	Unit hookup guides	These guides are used to mount an NX Unit or End Cover.
H	NX bus connector	This connector is used to connect the CPU Unit to the NX Unit on the right of the CPU Unit.
I	Option board slot 1 (left), Option board slot 2 (right)	Remove the covers of the slots and mount Option Boards. For the models with 24 built-in I/O points, only one slot is provided. Keep the removed covers in a safe place.
J	Output indicator	Shows the operation status of the built-in output.
K	Output terminal block	This terminal block is used to wire the built-in output.
L	CPU Unit operation status indicator	Shows the operation status of the CPU Unit.
M	Battery connector	Connector to mount the backup battery that is sold separately.
N	Battery slot	Used to mount the backup battery that is sold separately.
O	Built-in EtherCAT port (port 2)	Connects the built-in EtherCAT with an Ethernet cable.
P	Built-in EtherNet/IP port (port 1)	Connects the built-in EtherNet/IP with an Ethernet cable.
Q	SD Memory Card cover	Cover for the SD Memory Card and DIP switch. The cover swings upward.
R	End Cover	Cover to protect the CPU Unit and NX Units. One End Cover is provided with the CPU Unit.
S	Battery cover	Cover for the battery slot. Remove this cover when you mount/remove the battery.
T	ID information indication	Shows the ID information of the CPU Unit.
U	DIN Track contact plate	This plate is connected internally to the functional ground terminal on the terminal block.

*1. To use Safe Mode, set the DIP switch as shown below and then turn ON the power supply to the Controller.

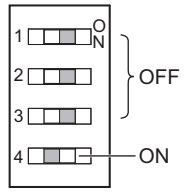

If the power supply to the Controller is turned ON with the CPU Unit in Safe Mode, the CPU Unit will start in PROGRAM mode. Use the Safe Mode if you do not want to execute the user program when the power supply is turned ON or if it is difficult to connect the Sysmac Studio. For information on Safe Mode, refer to the *NJ/NX-series Troubleshooting Manual* (Cat. No. W503).

*2. Refer to the *NJ/NX-series CPU Unit Software User's Manual* (Cat. No. W501) for details on backing up data.

Option Board

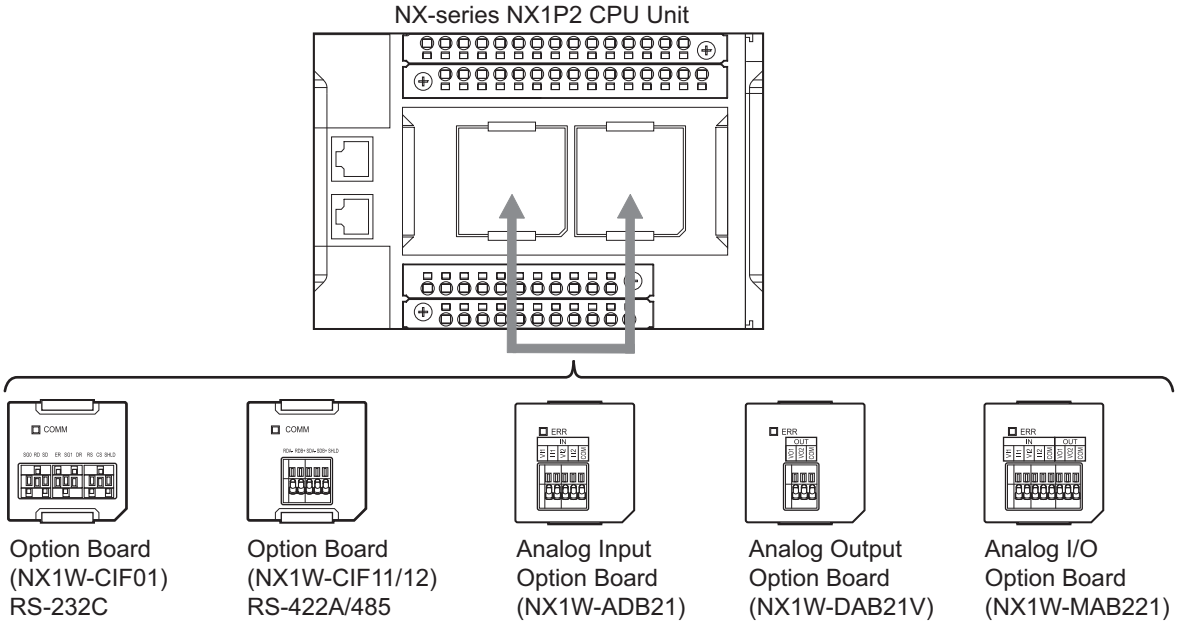

Option Board (NX1W-CIF01) RS-232C

Option Board (NX1W-CIF11/12) RS-422A/485

Analog Input Option Board (NX1W-ADB21)

Analog Output Option Board (NX1W-DAB21V)

Analog I/O Option Board (NX1W-MAB221)

Specifications of Serial Communications Option Board

Item	Specification		
Model	NX1W-CIF01	NX1W-CIF11	NX1W-CIF12
Communications port	One RS-232C port	One RS-422A/485 port	One RS-422A/485 port (isolated)
Communications method	Half-duplex		
Synchronization method	Start-stop synchronization		
Baud rate	1.2/2.4/4.8/9.6/19.2/38.4/57.6/115.2 kbps		
Transmission distance	15 m	50 m	500 m
Supported protocol	Host link, Modbus-RTU master, and no-protocol		
Connection type	Screwless clamping terminal block (9 terminals)	Screwless clamping terminal block (5 terminals)	
Applicable wire size	AWG28 to 20	AWG24 to 20	
Dimensions (mm) *1	35.9 × 35.9 × 13.5 (W×H×D)		
Weight	16 g	13 g	14 g
Power consumption	Included in the CPU Unit power consumption. The Option Board power consumption is included in the definition of the CPU Unit power consumption.		
Isolation method	No isolation		Isolation *2

*1. Projecting parts such as a terminal block is not included. When the Option Board is mounted to the CPU Unit, it protrudes through the CPU Unit surface. Refer to the *NX-series NX1P2 CPU Unit Hardware User's Manual* (Cat. No. W578) for details.
*2. The terminals are isolated from the internal circuits of the CPU Unit.

RS-232C Option Board (NX1W-CIF01)

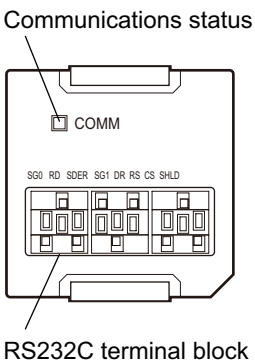

RS-232C Terminal Block

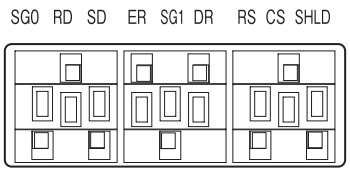

Abbreviation	Signal name	I/O
SG0	Signal grounding	---
RD	Receive data	Input
SD	Send data	Output
ER	Data terminal ready	Output
SG1	Signal grounding	---
DR	Data set ready	Input
RS	Send request	Output
CS	Data can be sent	Input
SHLD	Shield	---

Note: 1. As the Option Board does not have a 5 V power supply terminal, it cannot be connected to external converters such as an CJ1W-CIF11 and NT-AL001, or an NV3W-M□20L Programmable Terminal.
2. The terminal block is not removable.

RS-422A/485 Option Board (NX1W-CIF11/NX1W-CIF12)

Front Back (CIF11) Back (CIF12)

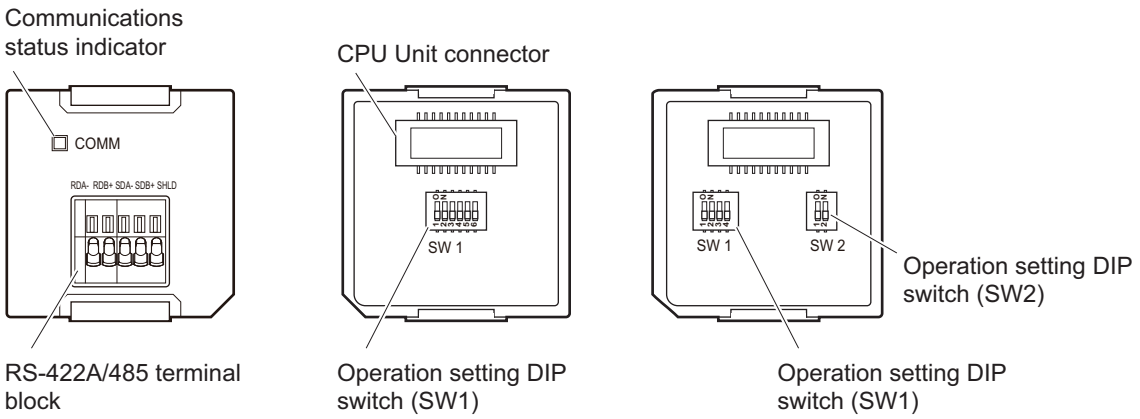

Note: All pins are turned OFF by default.
Use a narrow-tipped tool such as a flat-blade screwdriver to change the settings of the DIP switches.

RS-422A/485 Terminal Block

RDA- RDB+ SDA- SDB+ SHLD

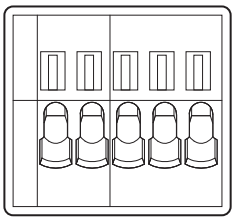

Abbreviation	Four-wire type selected		Two-wire type selected	
	Signal name	I/O	Signal name	I/O
RDA-	Reception data -	Input	Communication data -	I/O *
RDB+	Reception data +		Communication data +	
SDA-	Transmission data -	Output	Communication data -	I/O *
SDB+	Transmission data +		Communication data +	
SHLD	Shield			

* For two-wire connection, either the RDA-/RDB+ pair or SDA-/SDB+ pair can be used.

Specifications of Analog I/O Option Board

Item		Specification					
Model		NX1W-ADB21		NX1W-DAB21V		NX1W-MAB221	
I/O		Analog input		Analog output		Analog I/O	
	Voltage input	0 to 10 V	2 words total	---		0 to 10 V	2 words total
	Current input	0 to 20 mA		---		0 to 20 mA	
	Voltage output	---		0 to 10 V	2 words	0 to 10 V	2 words
Connection type		Screwless clamping terminal block (5 terminals)		Screwless clamping terminal block (3 terminals)		Screwless clamping terminal block (8 terminals)	
Applicable wire size		AWG24 to 20					
Dimensions (mm) *		35.9 × 35.9 × 28.2 (W×H×D)					
Weight		24 g		24 g		26 g	
Power consumption		Included in the CPU Unit power consumption. The Option Board power consumption is included in the definition of the CPU Unit power consumption.					
Isolation method		No isolation					

* Projecting parts such as a terminal block is not included. When the Option Board is mounted to the CPU Unit, it protrudes through the CPU Unit surface. Refer to the *NX-series NX1P2 CPU Unit Hardware User's Manual* (Cat. No. W578) for details.

Analog Input Option Board (NX1W-ADB21)

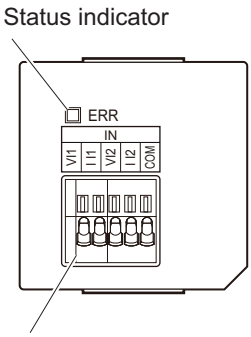

Analog Input Terminal Array

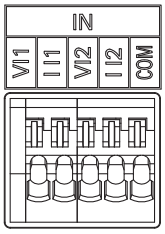

Abbreviation	Signal name
V I1	Voltage input 1
I I1	Current input 1
V I2	Voltage input 2
I I2	Current input 2
COM	Input common

Note: When you use the current input, be sure to short-circuit V I1 with I I1, and short-circuit V I2 with I I2.

Analog Input Specifications

Item		Specification	
		Voltage input	**Current input**
Input method		Single-ended input	Single-ended input
Input range		0 to 10 V	0 to 20 mA
Input conversion range		0 to 10.24 V	0 to 30 mA
Absolute maximum rating		-1 to 15 V	-4 to 30 mA
Input impedance		200 kΩ min.	Approx. 250 Ω
Resolution		1/4,000 (full scale)	1/2,000 (full scale)
Overall accuracy	**25°C**	±0.5% (full scale)	±0.6% (full scale)
	0 to 55°C	±1.0% (full scale)	±1.2% (full scale)
Averaging processing		Not provided	
Conversion time		Internal sampling time: 2 ms per point *	

* Refer to the *NX-series NX1P2 CPU Unit Built-in I/O and Option Board User's Manual* (Cat. No. W579) for information on refresh time.

Analog Output Option Board (NX1W-DAB21V)

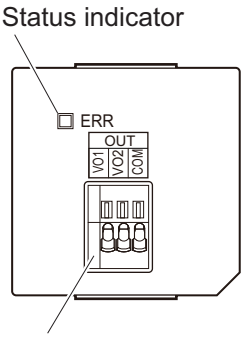

Analog Output Terminal Array

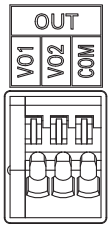

Abbreviation	Signal name
VO1	Voltage output 1
VO2	Voltage output 1
COM	Output common

Analog Output Specifications

Item		Specification	
		Voltage output	Current output
Output range		0 to 10 V	---
Output conversion range		0 to 10.24 V	---
Allowable load resistance		2 kΩ min.	---
Output impedance		0.5 Ω max.	---
Resolution		1/4,000 (full scale: 4,000)	---
Overall accuracy	25°C	±0.5% (full scale)	---
	0 to 55°C	±1.0% (full scale)	---
Conversion time		Internal sampling time: 2 ms per point *	

* Refer to the *NX-series NX1P2 CPU Unit Built-in I/O and Option Board User's Manual* (Cat. No. W579) for information on refresh time.

Analog I/O Option Board (NX1W-MAB221)

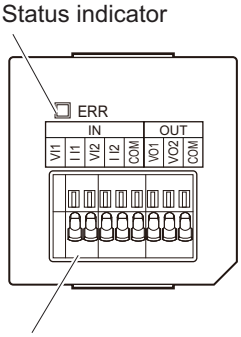

Analog I/O Terminal Array

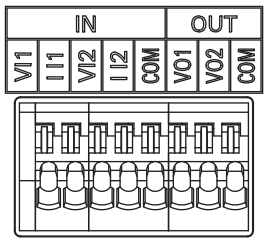

Abbreviation		Signal name
IN	VI1	Voltage input 1
	II1	Current input 1
	VI2	Voltage input 2
	II2	Current input 2
	COM	Input common
OUT	VO1	Voltage output 1
	VO2	Voltage output 2
	COM	Output common

Note: When you use the current input, be sure to short-circuit VI1 with II1, and short-circuit VI2 with II2.

Analog I/O Specifications

Item			Specification	
			Voltage I/O	Current I/O
Analog input section	Input method		Single-ended input	Single-ended input
	Input range		0 to 10 V	0 to 20 mA
	Input conversion range		0 to 10.24 V	0 to 30 mA
	Absolute maximum rating		-1 to 15 V	-4 to 30 mA
	Input impedance		200 kΩ min.	Approx. 250 Ω
	Resolution		1/4,000 (full scale)	1/2,000 (full scale)
	Overall accuracy	25°C	±0.5% (full scale)	±0.6% (full scale)
		0 to 55°C	±1.0% (full scale)	±1.2% (full scale)
	Averaging processing		Not provided	
Analog output section	Output range		0 to 10 V	---
	Output conversion range		0 to 10.24 V	---
	Allowable load resistance		2 kΩ min.	---
	Output impedance		0.5 Ω max.	---
	Resolution		1/4,000 (full scale)	---
	Overall accuracy	25°C	±0.5% (full scale)	---
		0 to 55°C	±1.0% (full scale)	---
Conversion time			Internal conversion time: 6 ms (Total of 4 channels) *	

* Refer to the *NX-series NX1P2 CPU Unit Built-in I/O and Option Board User's Manual* (Cat. No. W579) for information on refresh time.

NX Unit Configuration

CPU Rack

The CPU Rack consists of an NX-series NX1P2 CPU Unit, NX Units, and an End Cover.
Up to eight NX Units can be connected.

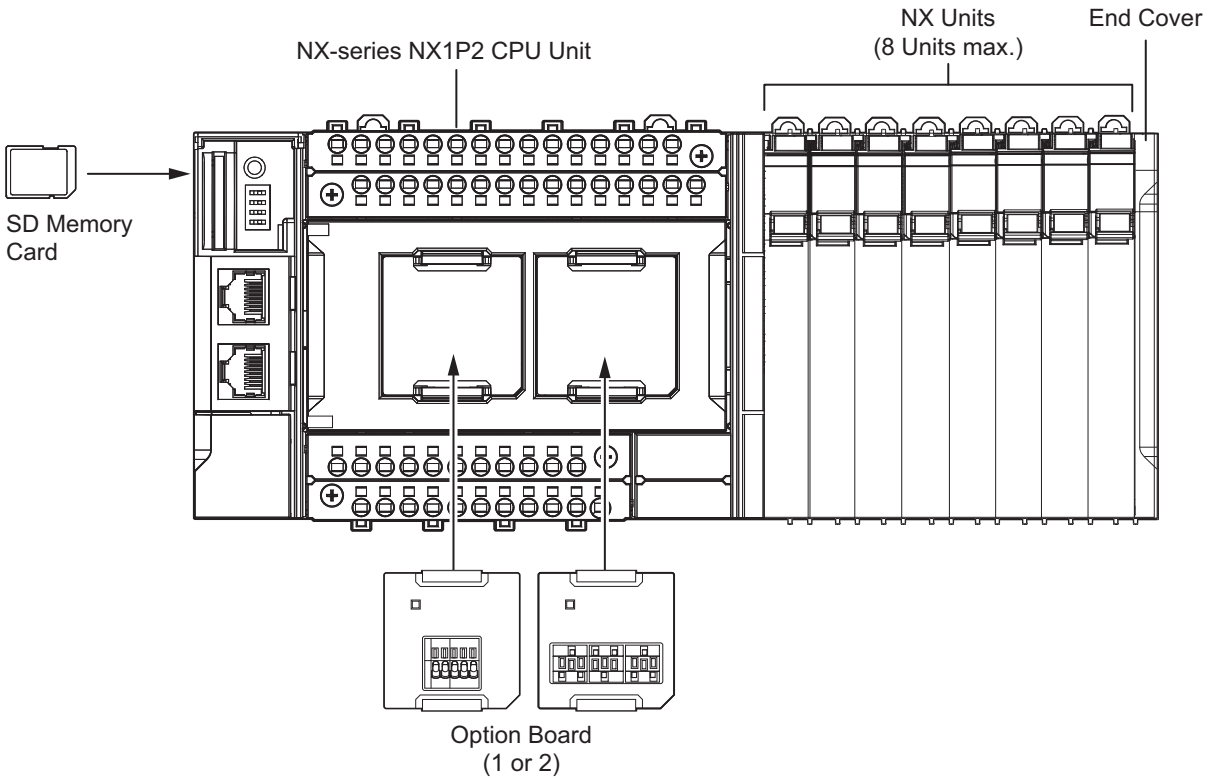

Configuration		Remarks
NX-series NX1P2 CPU Unit		One required for every CPU Rack.
End Cover		Must be connected to the right end of the CPU Rack. One End Cover is provided with the CPU Unit.
NX Unit	Digital I/O Unit	• Up to eight Units (including System Units such as Additional I/O Power Supply Unit) can be mounted to each Expansion Rack. • For the NX Units connectable to the CPU Unit, refer to the *Ordering Information* page. • You cannot mount NX-series Safety Control Units on the CPU Unit and use them. Use NX-series Safety Control Units as a subsystem on EtherCAT. • Refer to the *NX-series Data Reference Manual* (Cat. No. W525. Revision 11 or later) for information such as restrictions on the NX Units.
	Analog I/O Unit	
	System Unit	
	Position Interface Unit	
	Communication Interface Unit	
	Load Cell Input Unit	
Option Board	Serial Communications Option Board	One or two Option Boards can be connected to the CPU Unit.
	Analog I/O Option Board	
SD Memory Card		Install as required.

Battery

The battery is not mounted when the product is shipped.
To turn OFF the power supply to the equipment for a certain period of time by using the clock data for programming, event logs, etc., you need a separately-sold battery to retain the clock data.
The following describes the purpose of the battery mounting, the battery model, and the battery-related error detection and clock data settings.

Purpose of the Battery Mounting

The battery is used to retain the clock data while the power is not supplied to the CPU Unit. The clock data is retained by the built-in capacitor whether the battery is mounted or not, but the retention period depends on the continuous power-ON time of the CPU Unit, as shown below.

Continuous power-ON time of CPU Unit *	Retention period during no power supply at an ambient temperature of 40°C
100 hours	Approx. 10 days
8 hours	Approx. 8 days
1 hour	Approx. 7 days

* This is equivalent to the time to charge a built-in capacitor in which no electric charge is accumulated.

When you use the clock data for programming, use a battery if you cannot ensure the continuous power-ON time shown above or the power-OFF time is longer than the above power-ON time.

The following data (other than the clock data) is retained in the built-in non-volatile memory, so they are not lost even if the battery and built-in capacitor are fully discharged.

- User program
- Set values
- Variables retained during power interruption
- Event logs

Battery Model

The table below shows the model and specifications of the battery that can be used.

Model	Appearance	Specification
CJ1W-BAT01	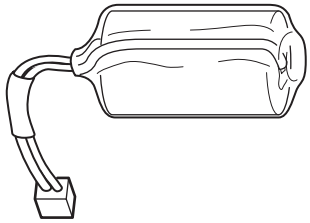	Service life: 5 years Refer to the *NX-series NX1P2 CPU Unit Hardware User's Manual* (Cat. No. W578) for details. The clock information is retained during power interruptions.

Sysmac Studio

The Sysmac Studio is a Support Software package that provides an integrated development environment to design, program, debug, and maintain Sysmac NJ/NX-series Controllers.

Configuration

With an NX1P2 CPU Unit, you can connect the Sysmac Studio online in the following ways.

Connection with EtherNet/IP

- 1:1 Connection

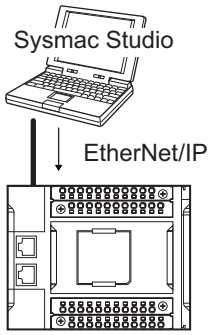

- A direct connection is made from the Sysmac Studio. The IP address and connection device do not need to be specified.
- You can make the connection whether or not a switching hub is used.
- Support for Auto-MDI enables the use of cross cables or straight cables if a direct connection is made.

- 1:N Connection

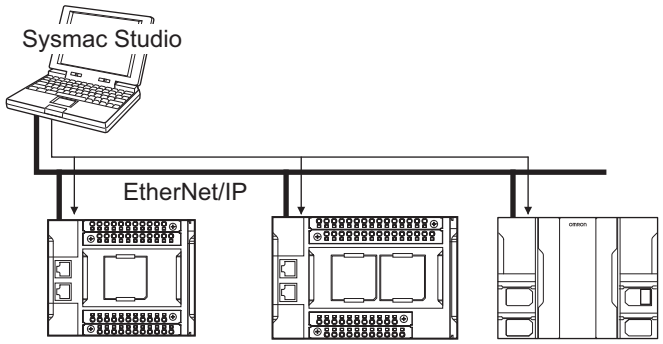

- Directly specify the IP address of the remote device.

Version Information

Unit Versions and Corresponding Sysmac Studio Versions

Refer to *NX-series NX1P2 CPU Unit Hardware User's Manual* (W578).

Dimensions

(Unit: mm)

NX-series NX1P2 CPU Units

NX1P2-1□40□□□

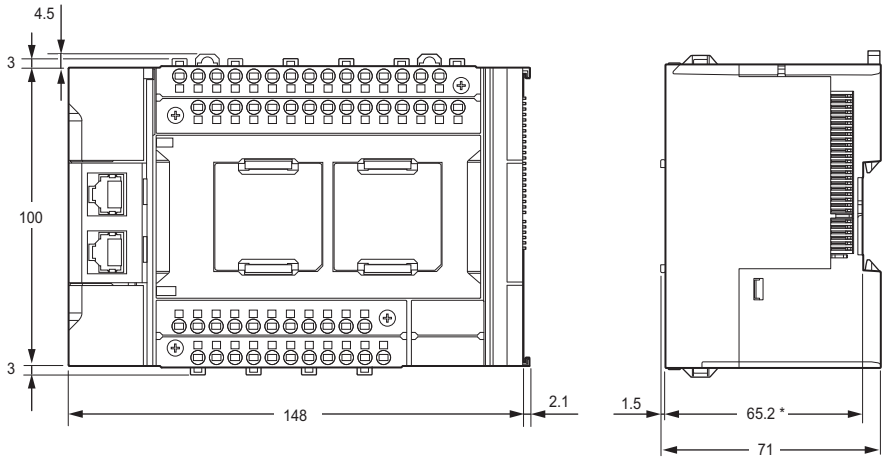

* The dimension from the attachment surface of the DIN Track to the front surface of the CPU Unit.

NX1P2-9024□□□

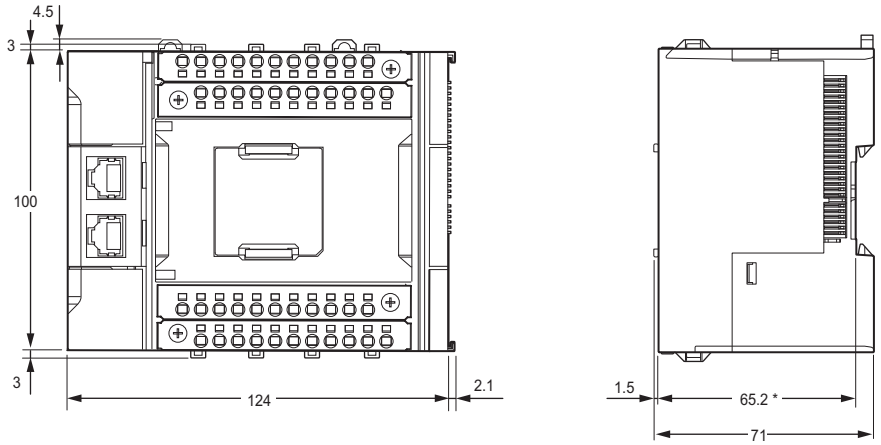

* The dimension from the attachment surface of the DIN Track to the front surface of the CPU Unit.

End cover

NX-END02

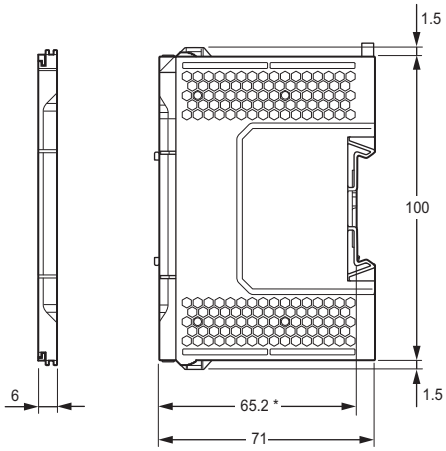

* The dimension from the attachment surface of the DIN Track to the front surface of the CPU Unit.

Related Manuals

Manual name	Cat. No.	Model numbers	Application	Description
NX-series NX1P2 CPU Unit Hardware User's Manual	W578	NX1P2-□□□□	Learning the basic specifications of the NX-series NX1P2 CPU Units, including introductory information, designing, installation, and maintenance. Mainly hardware information is provided.	An introduction to the entire NX1P2 CPU Unit system is provided along with the following information on the NX1P2 CPU Unit. • Features and system configuration • Introduction • Part names and functions • General specifications • Installation and wiring • Maintenance and inspection
NX-series NX1P2 CPU Unit Built-in I/O and Option Board User's Manual	W579	NX1P2-□□□□	Learning about the details of functions only for an NX-series NX1P2 CPU Unit and an introduction of functions for an NJ/NX-series CPU Unit.	Of the functions for an NX1P2 CPU Unit, the following information is provided. • Built-in I/O • Serial Communication Option Boards • Analog I/O Option Boards An introduction of following functions for an NJ/NX-series CPU Unit is also provided. • Motion control functions • EtherNet/IP communications functions • EtherCAT communications functions
NJ/NX-series CPU Unit Software User's Manual	W501	NX701-□□□□ NX502-□□□□ NX102-□□□□ NX1P2-□□□□ NJ501-□□□□ NJ301-□□□□ NJ101-□□□□	Learning how to program and set up an NJ/NX-series CPU Unit. Mainly software information is provided.	The following information is provided on a Controller built with an NJ/NX-series CPU Unit. • CPU Unit operation • CPU Unit features • Initial settings • Programming based on IEC 61131-3 language specifications
NJ/NX-series Instructions Reference Manual	W502	NX701-□□□□ NX502-□□□□ NX102-□□□□ NX1P2-□□□□ NJ501-□□□□ NJ301-□□□□ NJ101-□□□□	Learning detailed specifications on the basic instructions of an NJ/NX-series CPU Unit.	The instructions in the instruction set (IEC 61131-3 specifications) are described.
NJ/NX-series CPU Unit Motion Control User's Manual	W507	NX701-□□□□ NX502-□□□□ NX102-□□□□ NX1P2-□□□□ NJ501-□□□□ NJ301-□□□□ NJ101-□□□□	Learning about motion control settings and programming concepts.	The settings and operation of the CPU Unit and programming concepts for motion control are described.
NJ/NX-series Motion Control Instructions Reference Manual	W508	NX701-□□□□ NX502-□□□□ NX102-□□□□ NX1P2-□□□□ NJ501-□□□□ NJ301-□□□□ NJ101-□□□□	Learning about the specifications of the motion control instructions.	The motion control instructions are described.
NJ/NX-series CPU Unit Built-in EtherCAT® Port User's Manual	W505	NX701-□□□□ NX502-□□□□ NX102-□□□□ NX1P2-□□□□ NJ501-□□□□ NJ301-□□□□ NJ101-□□□□	Using the built-in EtherCAT port on an NJ/NX-series CPU Unit.	Information on the built-in EtherCAT port is provided. This manual provides an introduction and provides information on the configuration, features, and setup.
NJ/NX-series CPU Unit Built-in EtherNet/IP™ port User's Manual	W506	NX701-□□□□ NX502-□□□□ NX102-□□□□ NX1P2-□□□□ NJ501-□□□□ NJ301-□□□□ NJ101-□□□□	Using the built-in EtherNet/IP port on an NJ/NX-series CPU Unit.	Information on the built-in EtherNet/IP port is provided. Information is provided on the basic setup, tag data links, and other features.
NJ/NX-series Troubleshooting Manual	W503	NX701-□□□□ NX502-□□□□ NX102-□□□□ NX1P2-□□□□ NJ501-□□□□ NJ301-□□□□ NJ101-□□□□	Learning about the errors that may be detected in an NJ/NX-series Controller.	Describes concepts on managing errors that may be detected in an NJ/NX-series Controller and information on individual errors.
Sysmac Studio Version 1 Operation Manual	W504	SYSMAC-SE2□□□	Learning about the operating procedures and functions of the Sysmac Studio.	Describes the operating procedures of the Sysmac Studio.
NX-series EtherCAT® Coupler Unit User's Manual	W519	NX-ECC20□	Leaning how to use an NX-series EtherCAT Coupler Unit and EtherCAT Slave Terminals	The following items are described: the overall system and configuration methods of an EtherCAT Slave Terminal (which consists of an NX-series EtherCAT Coupler Unit and NX Units), and information on hardware, setup, and functions to set up, control, and monitor NX Units through EtherCAT.
NX-series Data Reference Manual	W525	NX-□□□□	Referencing lists of the data that is required to configure systems with NX-series Units	Lists of the power consumptions, weights, and other NX Unit data that is required to configure systems with NX-series Units are provided.

Manual name	Cat. No.	Model numbers	Application	Description
NX-series NX Units User's Manuals	W521	NX-ID□□□□ NX-IA□□□□ NX-OC□□□□ NX-OD□□□□ NX-MD□□□□	Learning how to use NX Units.	Describe the hardware, setup methods, and functions of the NX Units. Manuals are available for the following Units. Digital I/O Units, Analog I/O Units, System Units, Position Interface Units, Communications Interface Units, Load Cell Input Unit, and IO-Link Master Unit
	W522	NX-AD□□□□ NX-DA□□□□		
	W566	NX-TS□□□□ NX-HB□□□□		
	W523	NX-PD1□□□ NX-PF0□□□ NX-PC0□□□ NX-TBX01		
	W524	NX-EC0□□□ NX-ECS□□□ NX-PG0□□□		
	W540	NX-CIF□□□		
	W565	NX-RS□□□□		
	W567	NX-ILM□□□		
NX-series Safety Control Unit User's Manual	Z930	NX-SL□□□□ NX-SI□□□□ NX-SO□□□□	Learning how to use NX-series Safety Controls Units	The hardware, setup methods, and functions of the NX-series Safety Control Unit are described.
NA-series Programmable Terminal Software User's Manual	V118	NA5-□W□□□□	Learning about NA-series PT pages and object functions.	Describes the pages and object functions of the NA-series Programmable Terminals.
NS-series Programmable Terminals Programming Manual	V073	NS15-□□□□ NS12-□□□□ NS10-□□□□ NS8-□□□□ NS5-□□□□	Learning how to use the NS-series Programmable Terminals.	Describes the setup methods, functions, etc. of the NS-series Programmable Terminals.

Applicable Models for Cable Redundancy Function

For more information on applicable models of Cable Redundancy function, refer to the Applicable Models of Cable Redundancy Function (Cat. No. R200).

Sysmac is a trademark or registered trademark of OMRON Corporation in Japan and other countries for OMRON factory automation products.
Windows is either registered trademarks or trademarks of Microsoft Corporation in the United States and/or other countries.
EtherCAT® is registered trademark and patented technology, licensed by Beckhoff Automation GmbH, Germany.
EtherNet/IP™ is the trademarks of ODVA.
This product includes software developed by the OpenSSL Project for use in the OpenSSL Toolkit. (http://www.openssl.org/)
This product includes cryptographic software written by Eric Young (eay@cryptsoft.com).
Other company names and product names in this document are the trademarks or registered trademarks of their respective companies.
The product photographs and figures that are used in this catalog may vary somewhat from the actual products.

Terms and Conditions Agreement

Read and understand this catalog.

Please read and understand this catalog before purchasing the products. Please consult your OMRON representative if you have any questions or comments.

Warranties.

(a) Exclusive Warranty. Omron's exclusive warranty is that the Products will be free from defects in materials and workmanship for a period of twelve months from the date of sale by Omron (or such other period expressed in writing by Omron). Omron disclaims all other warranties, express or implied.

(b) Limitations. OMRON MAKES NO WARRANTY OR REPRESENTATION, EXPRESS OR IMPLIED, ABOUT NON-INFRINGEMENT, MERCHANTABILITY OR FITNESS FOR A PARTICULAR PURPOSE OF THE PRODUCTS. BUYER ACKNOWLEDGES THAT IT ALONE HAS DETERMINED THAT THE PRODUCTS WILL SUITABLY MEET THE REQUIREMENTS OF THEIR INTENDED USE.

Omron further disclaims all warranties and responsibility of any type for claims or expenses based on infringement by the Products or otherwise of any intellectual property right. (c) Buyer Remedy. Omron's sole obligation hereunder shall be, at Omron's election, to (i) replace (in the form originally shipped with Buyer responsible for labor charges for removal or replacement thereof) the non-complying Product, (ii) repair the non-complying Product, or (iii) repay or credit Buyer an amount equal to the purchase price of the non-complying Product; provided that in no event shall Omron be responsible for warranty, repair, indemnity or any other claims or expenses regarding the Products unless Omron's analysis confirms that the Products were properly handled, stored, installed and maintained and not subject to contamination, abuse, misuse or inappropriate modification. Return of any Products by Buyer must be approved in writing by Omron before shipment. Omron Companies shall not be liable for the suitability or unsuitability or the results from the use of Products in combination with any electrical or electronic components, circuits, system assemblies or any other materials or substances or environments. Any advice, recommendations or information given orally or in writing, are not to be construed as an amendment or addition to the above warranty.

See http://www.omron.com/global/ or contact your Omron representative for published information.

Limitation on Liability; Etc.

OMRON COMPANIES SHALL NOT BE LIABLE FOR SPECIAL, INDIRECT, INCIDENTAL, OR CONSEQUENTIAL DAMAGES, LOSS OF PROFITS OR PRODUCTION OR COMMERCIAL LOSS IN ANY WAY CONNECTED WITH THE PRODUCTS, WHETHER SUCH CLAIM IS BASED IN CONTRACT, WARRANTY, NEGLIGENCE OR STRICT LIABILITY.

Further, in no event shall liability of Omron Companies exceed the individual price of the Product on which liability is asserted.

Suitability of Use.

Omron Companies shall not be responsible for conformity with any standards, codes or regulations which apply to the combination of the Product in the Buyer's application or use of the Product. At Buyer's request, Omron will provide applicable third party certification documents identifying ratings and limitations of use which apply to the Product. This information by itself is not sufficient for a complete determination of the suitability of the Product in combination with the end product, machine, system, or other application or use. Buyer shall be solely responsible for determining appropriateness of the particular Product with respect to Buyer's application, product or system. Buyer shall take application responsibility in all cases.

NEVER USE THE PRODUCT FOR AN APPLICATION INVOLVING SERIOUS RISK TO LIFE OR PROPERTY OR IN LARGE QUANTITIES WITHOUT ENSURING THAT THE SYSTEM AS A WHOLE HAS BEEN DESIGNED TO ADDRESS THE RISKS, AND THAT THE OMRON PRODUCT(S) IS PROPERLY RATED AND INSTALLED FOR THE INTENDED USE WITHIN THE OVERALL EQUIPMENT OR SYSTEM.

Programmable Products.

Omron Companies shall not be responsible for the user's programming of a programmable Product, or any consequence thereof.

Performance Data.

Data presented in Omron Company websites, catalogs and other materials is provided as a guide for the user in determining suitability and does not constitute a warranty. It may represent the result of Omron's test conditions, and the user must correlate it to actual application requirements. Actual performance is subject to the Omron's Warranty and Limitations of Liability.

Change in Specifications.

Product specifications and accessories may be changed at any time based on improvements and other reasons. It is our practice to change part numbers when published ratings or features are changed, or when significant construction changes are made. However, some specifications of the Product may be changed without any notice. When in doubt, special part numbers may be assigned to fix or establish key specifications for your application. Please consult with your Omron's representative at any time to confirm actual specifications of purchased Product.

Errors and Omissions.

Information presented by Omron Companies has been checked and is believed to be accurate; however, no responsibility is assumed for clerical, typographical or proofreading errors or omissions.

Note: Do not use this document to operate the Unit.

OMRON Corporation **Industrial Automation Company**

Kyoto, JAPAN **Contact : www.ia.omron.com**

Regional Headquarters

OMRON EUROPE B.V.
Wegalaan 67-69, 2132 JD Hoofddorp
The Netherlands
Tel: (31) 2356-81-300 Fax: (31) 2356-81-388

OMRON ELECTRONICS LLC
2895 Greenspoint Parkway, Suite 200
Hoffman Estates, IL 60169 U.S.A.
Tel: (1) 847-843-7900 Fax: (1) 847-843-7787

OMRON ASIA PACIFIC PTE. LTD.
438B Alexandra Road, #08-01/02 Alexandra
Technopark, Singapore 119968
Tel: (65) 6835-3011 Fax: (65) 6835-3011

OMRON (CHINA) CO., LTD.
Room 2211, Bank of China Tower,
200 Yin Cheng Zhong Road,
PuDong New Area, Shanghai, 200120, China
Tel: (86) 21-6023-0333 Fax: (86) 21-5037-2388

Authorized Distributor:

©OMRON Corporation 2016-2024 All Rights Reserved.
In the interest of product improvement,
specifications are subject to change without notice.

CSM_9_8
Cat. No. P116-E1-23 1224 (0916)