Motorized change-over switches

Installation and operating instructions
34OTM_C / 1SCC303002M9703



Contents

1. Introduction ... 4
1.1 Use of symbols ... 4
1.2 Explanations of abbreviations and terms ... 4
2. Product overview ... 5
3. Quick start ... 6
3.1 Operating the motorized change-over switch electrically; remote control ... 6
3.1.1 Locking electrical operation ... 6
3.2 Operating the motorized change-over switch manually; local operation ... 7
4. Installation ... 8
4.1 Mounting the motorized change-over switch ... 8
4.2 Dimensional drawings ... 10
4.3 Mounting positions ... 17
4.4 Labelling ... 17
5. Connecting ... 18
5.1 Control circuit ... 18
6. Operating ... 19
6.1 Electrical operation ... 19
6.1.1 Impulse control ... 20
6.1.2 Continuous control ... 21
6.2 Manual operation by using the handle ... 22
6.3 Locking ... 23
6.3.1 Locking the electrical operation ... 23
6.3.2 Locking the manual operation ... 23
7. Technical data ... 25
8. Accessories ... 27
8.1 Terminal clamp sets ... 27
8.2 Bridging bars ... 28
8.3 Terminal shrouds ... 31
8.4 Auxiliary contact blocks ... 34
8.5 Handle and spare fuse storage ... 35
9. UL standard switches ... 36
9.1 Phase barriers ... 37

1. Introduction

This manual describes the installation and the basic operation of the motorized change-over switches, types OTM160...2500_C. The instructive part is followed by a section on available accessories.

1.1 Use of symbols



Hazardous voltage: warns about a situation where a hazardous voltage may cause physical injury to a person or damage to equipment.



General warning: warns about a situation where something other than electrical equipment may cause physical injury to a person or damage to equipment.



Caution: provides important information or warns about a situation that may have a detrimental effect on equipment.



Information: provides important information about the equipment.

1.2 Explanations of abbreviations and terms

OTM_C: Motorized change-over switch, the type name

OME_: Motor operator, the type name

OT_C: Change-over switch, the type name

OZXB_ and OZXA_: Terminal clamp sets, the type name, optional

OTZC_: Bridging bars, the type name, optional

OTS_: Terminal shrouds, the type name, optional

OA_: Auxiliary contact blocks, the type name, optional

2. Product overview

Motorized change-over switches (type OTM_C) are suitable for remote control. You can operate the motorized change-over switches either electrically by using the motor operator or manually by using the handle. The operation, either electrical or manual, can be chosen by the selector switch “Motor/Manual” on the motor operator. Motorized change-over switches consist of the change-over switch and the motor operator.

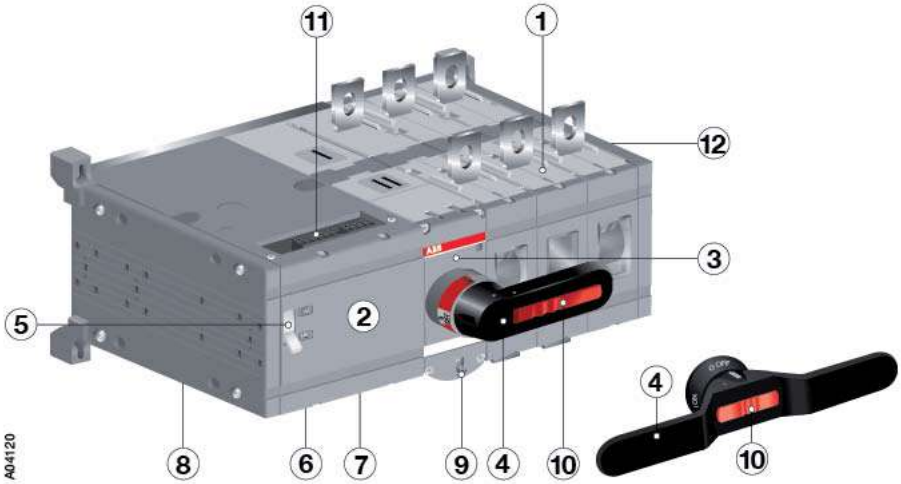

Figure 2.1 Motorized change-over switch (type OTM_C)

1 Change-over switch (type OT_C)
2 Motor operator (type OME_)
3 Switch panel, the operating mechanism
4 Handle for manual operation, douple grip handle in sizes OTM1000-2500_C
5 Motor/Manual selection
6 Terminals for motor operator voltage supply
7 Terminals for push-buttons
8 Fuse (F1) of motor operator
9 Locking latch for releasing the handle and locking electrical operation
10 Locking clip for locking manual operation
11 Terminals for locking state information
12 Place for auxiliary contact blocks

3. Quick start

This is a quick guide only meant for those who need a reminder of how to operate the unit. For more detailed instructions, see chapter 6.

3.1 Operating the motorized change-over switch electrically; remote control

To operate the motorized change-over switch electrically:

1. Remove the handle from the change-over switch panel. You can remove the handle in all positions (I, 0, II).
2. Turn the Motor/Manual selector to the Motor (M) position to enable electrical operation.

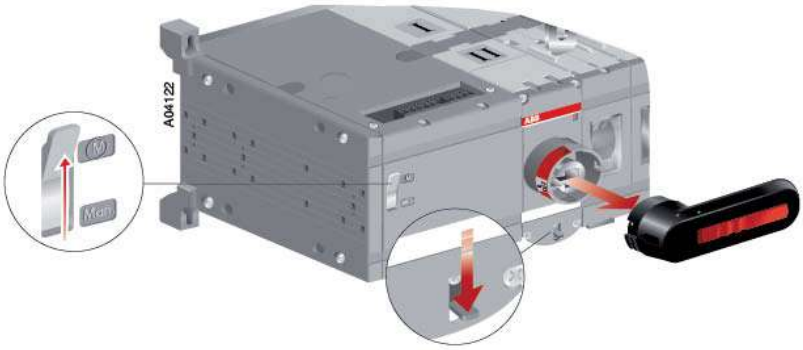

Figure 3.1 Operating the motorized change-over switch electrically; remote control

3.1.1 Locking electrical operation

To disable electrical operation, lock the locking latch with a padlock. After the locking latch has been locked, the motorized change-over switch cannot be operated electrically. You can lock electrical operation in all positions (I, 0, II).

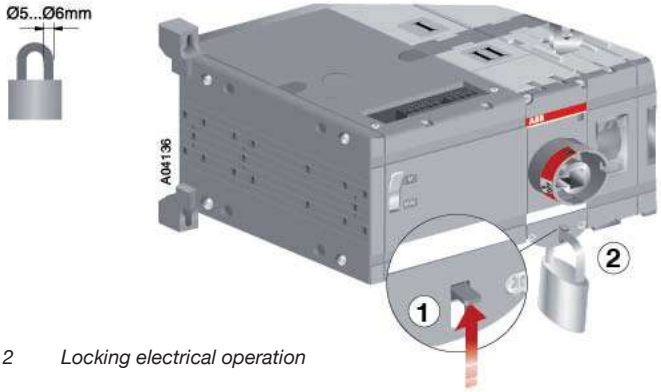

Figure 3.2 Locking electrical operation

3.2 Operating the motorized change-over switch manually; local operation

To operate the motorized change-over switch manually:

1. Turn the Motor/Manual selector to the Manual (Man.) position to enable manual operation and to prevent electrical operation.
2. Attach the handle to the change-over switch panel. You can attach the handle in all positions (I, 0, II).



Figure 3.3 Operating the motorized change-over switch manually

To disable the manual (and at the same time also electrical) operation, lift up the locking clip to position 0 and attach the padlock to the handle.



Figure 3.4 Locking the manual operation

4. Installation

4.1 Mounting the motorized change-over switch

Use protection against direct contact.

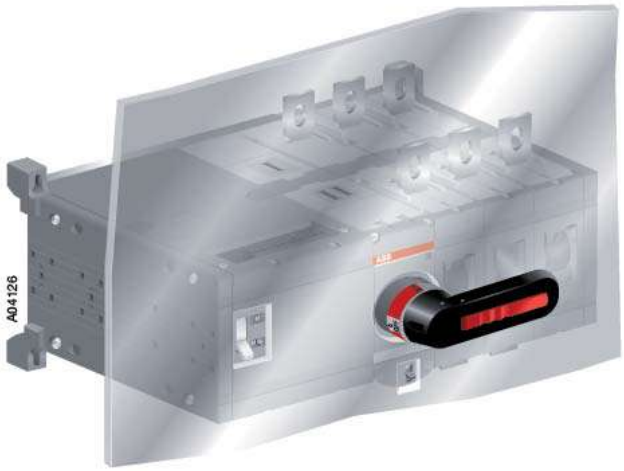

Figure 4.1 An example of using protection against direct contact

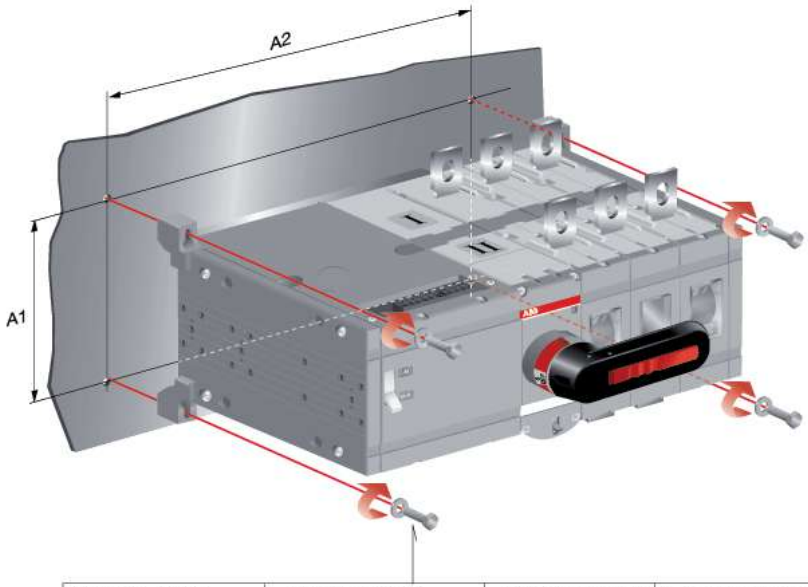

A04127

OTM160...250_C M5 3,5...4 Nm 31...35.4 lb.in.	OTM315...400_C M5 3,5...4 Nm 31...35.4 lb.in.	OTM600...800E_C M6	OTM800U_C, OTM1000...2500_C M10

	OTM160-250_		OTM160-250_		OTM200	
	_E3C_	_E4C_	_E3WC_	E4WC_	_U3C_	_U4C_
A1	116	116	116	116	116/4,57	116/4,57
A2	258	293	282	325	282/11,10	325/12,80

	OTM315-400_		OTM400_	
	_E3C_	_E4C_	_U3C_	_U4C_
A1	142	142	142/5,59	142/5,59
A2	305	349	335/13,19	389/15,31

	OTM630-800_		OTM600_	
	_E3C_	_E4C_	_U3C_	_U4C_
A1	180	180	180/7,09	180/7,09
A2	390	455	390/15,35	455/17,91

	OTM1000-1250_		OTM1600_		OTM800-1200_	
	_E3C_	_E4C_	_E3WC_	E4WC_	_U3C_	_U4C_
A1	230	230	230	230	230/9,06	230/9,06
A2	476,5	556,5	476,5	556,5	476,5/18,77	556,5/21,92

	OTM2000-2500_		OTM1600_	
	_E3C_	_E4C_	_U3C_	_U4C_
A1	230	230	230/9,06	230/9,06
A2	614,5	740,5	614,5/24,21	740,5/29,17

Figure 4.2 Motorized change-over switches, drilling hole distances / screw-mounting, [mm/in]

4.2 Dimensional drawings

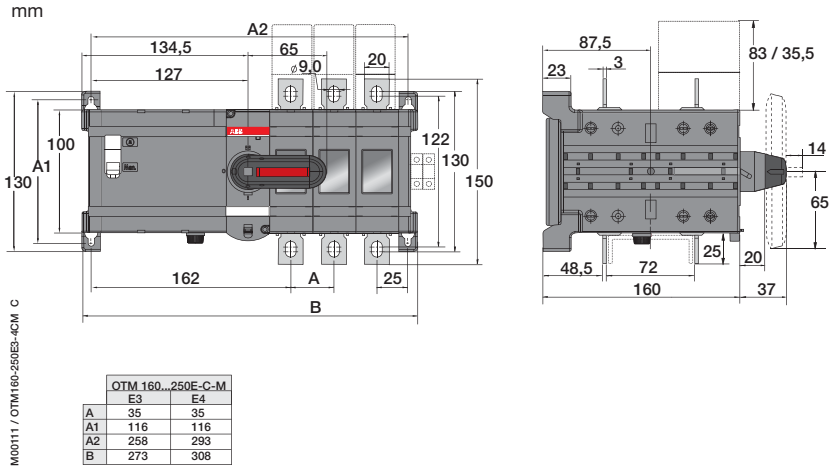

	OTM 160...250E-C-M	
	E3	E4
A	35	35
A1	116	116
A2	258	293
B	273	308

Figure 4.3 OTM160...250E_CM

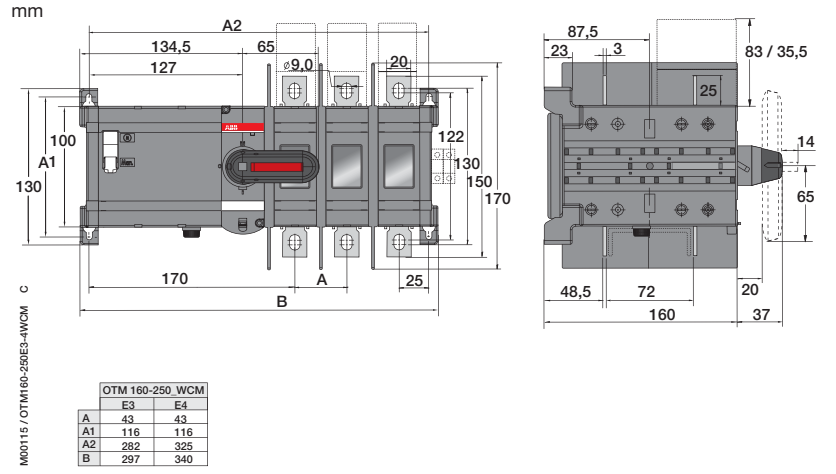

	OTM 160-250_WCM	
	E3	E4
A	43	43
A1	116	116
A2	282	325
B	297	340

Figure 4.4 OTM160...250E_WCM

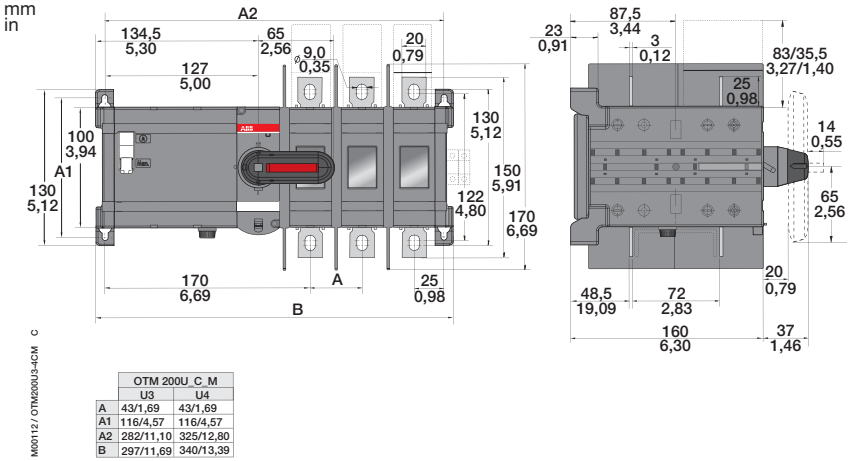

	OTM 200U_C_M	
	U3	U4
A	43/1,69	43/1,69
A1	116/4,57	116/4,57
A2	282/11,10	325/12,80
B	297/11,69	340/13,39

Figure 4.5 OTM200U_CM

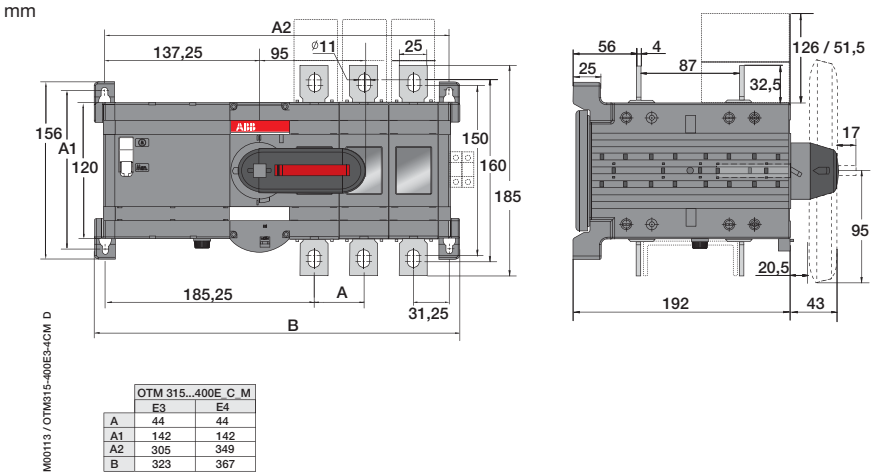

	OTM 315...400E_C_M	
	E3	E4
A	44	44
A1	142	142
A2	305	349
B	323	367

Figure 4.6 OTM315...400E_CM

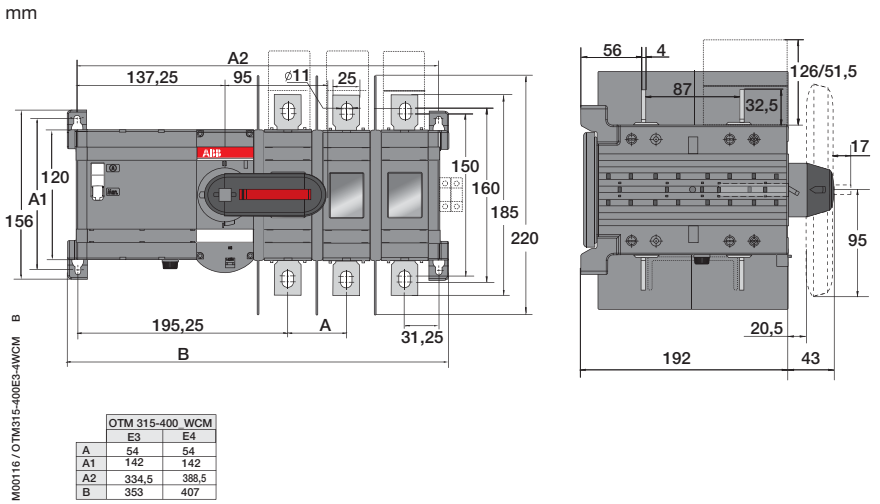

	OTM 315-400_WCM	
	E3	E4
A	54	54
A1	142	142
A2	334,5	388,5
B	353	407

Figure 4.7 OTM315...400E_WCM

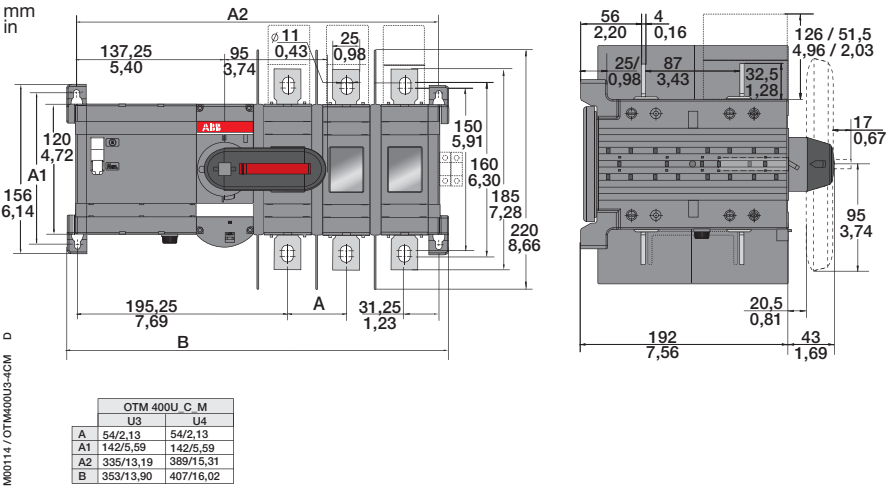

	OTM 400U_C_M	
	U3	U4
A	54/2,13	54/2,13
A1	142/5,59	142/5,59
A2	335/13,19	389/15,31
B	353/13,90	407/16,02

Figure 4.8 OTM400U_CM

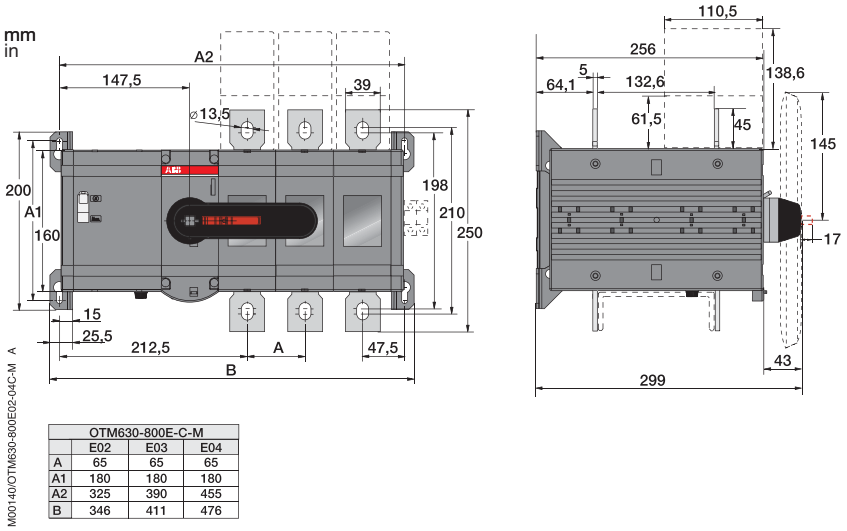

OTM630-800E-C-M			
	E02	E03	E04
A	65	65	65
A1	180	180	180
A2	325	390	455
B	346	411	476

Figure 4.9 OTM630...800E_CM

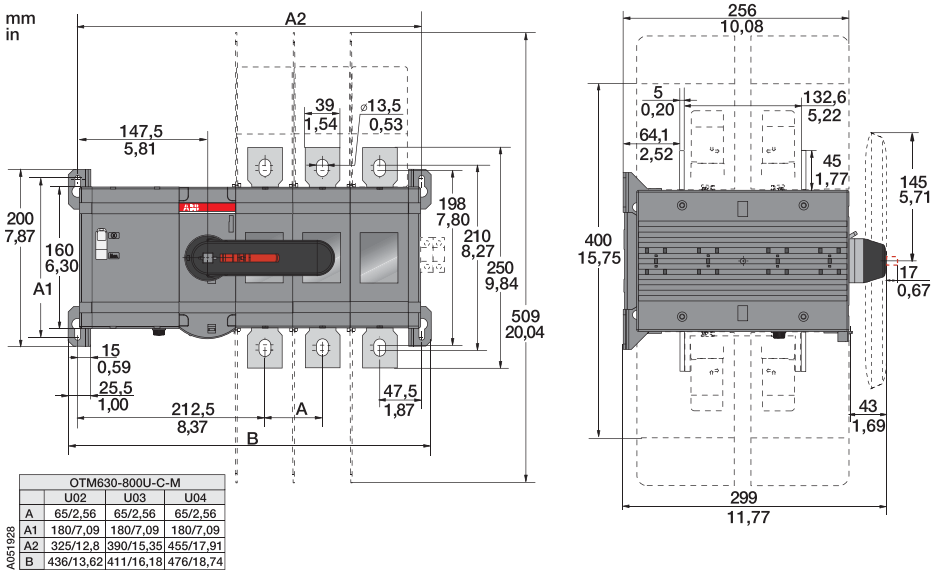

OTM630-800U-C-M			
	U02	U03	U04
A	65/2,56	65/2,56	65/2,56
A1	180/7,09	180/7,09	180/7,09
A2	325/12,8	390/15,35	455/17,91
B	436/13,62	411/16,18	476/18,74

Figure 4.10 OTM600U_CM

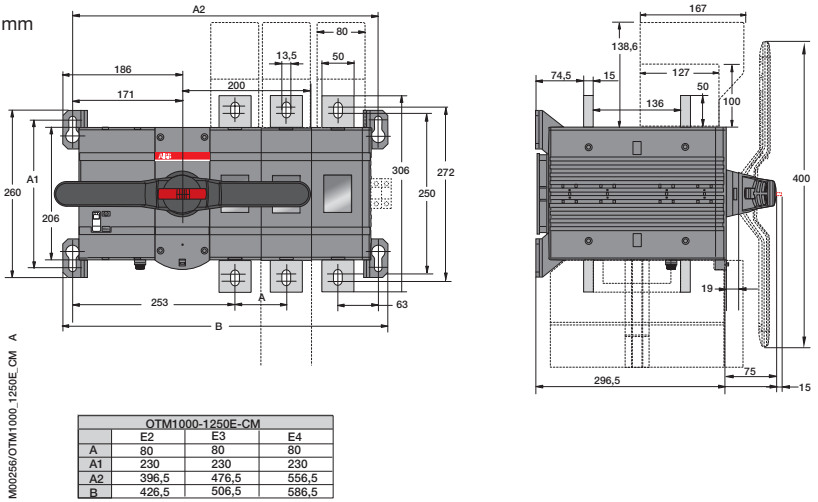

OTM1000-1250E-CM			
	E2	E3	E4
A	80	80	80
A1	230	230	230
A2	396,5	476,5	556,5
B	426,5	506,5	586,5

Figure 4.11 OTM1000...1200E_CM

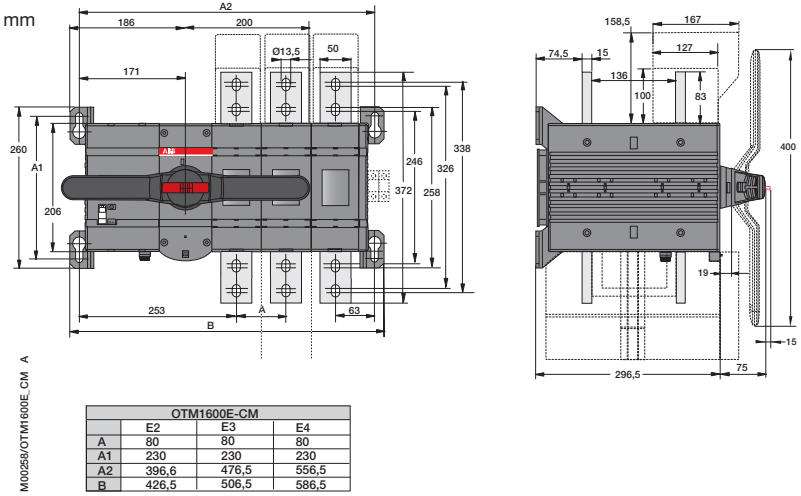

OTM1600E-CM			
	E2	E3	E4
A	80	80	80
A1	230	230	230
A2	396,6	476,5	556,5
B	426,5	506,5	586,5

Figure 4.12 OTM1600E_CM

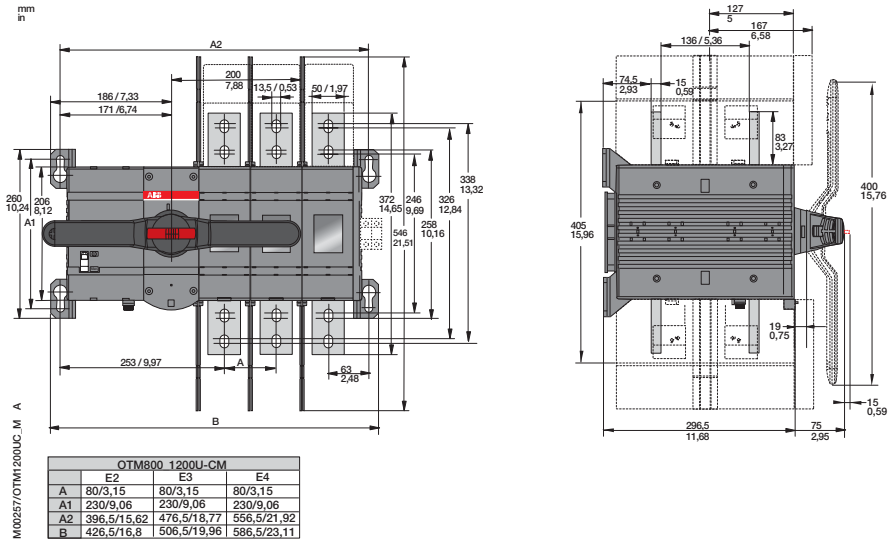

OTM800_1200U-CM			
	E2	E3	E4
A	80/3,15	80/3,15	80/3,15
A1	230/9,06	230/9,06	230/9,06
A2	396,5/15,62	476,5/18,77	556,5/21,92
B	426,5/16,8	506,5/19,96	586,5/23,11

Figure 4.13 OTM800...1200U_CM

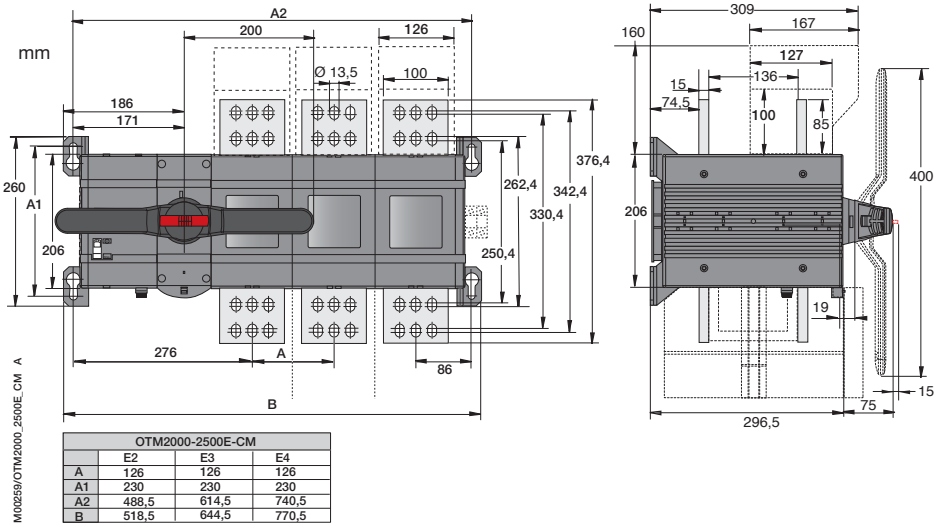

OTM2000-2500E-CM			
	E2	E3	E4
A	126	126	126
A1	230	230	230
A2	488,5	614,5	740,5
B	518,5	644,5	770,5

Figure 4.14 OTM2000...2500E_CM

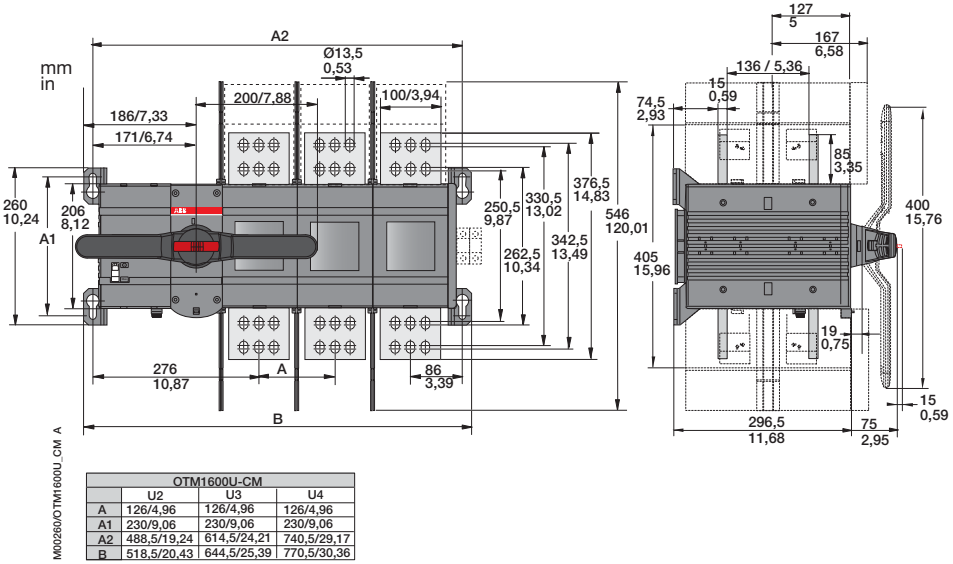

OTM1600U-CM			
	U2	U3	U4
A	126/4,96	126/4,96	126/4,96
A1	230/9,06	230/9,06	230/9,06
A2	488,5/19,24	614,5/24,21	740,5/29,17
B	518,5/20,43	644,5/25,39	770,5/30,36

Figure 4.15 OTM1600U_CM

4.3 Mounting positions

The recommended mounting positions for motorized change-over switches are horizontal, wall mounted or table mounted.

Do not install the motorized change-over switches in any other position than those described above.

4.4 Labelling

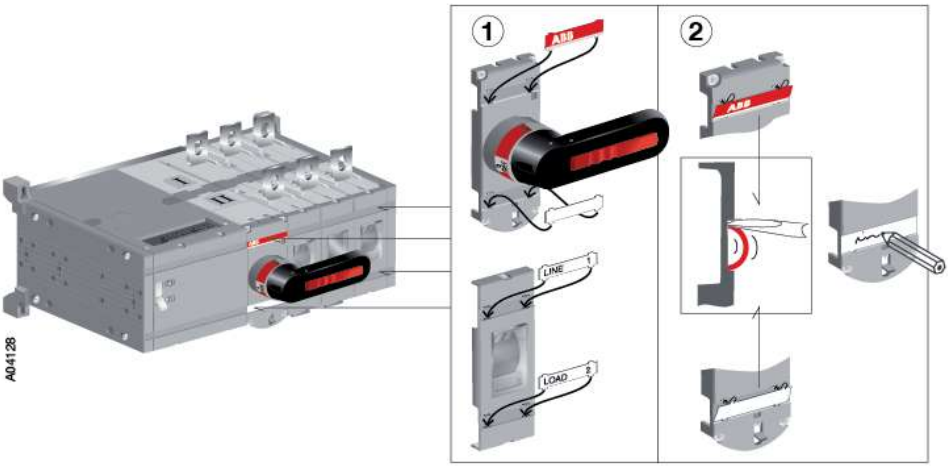

Figure 4.17 Labelling of the motorized change-over switches

5. Connecting

Only an authorised electrician may perform the electrical installation and maintenance of motorized change-over switches. Do not attempt any installation or maintenance actions when a motorized change-over switch is connected to the electrical mains. Before starting work, make sure that the change-over switch is de-energised.

5.1 Control circuit

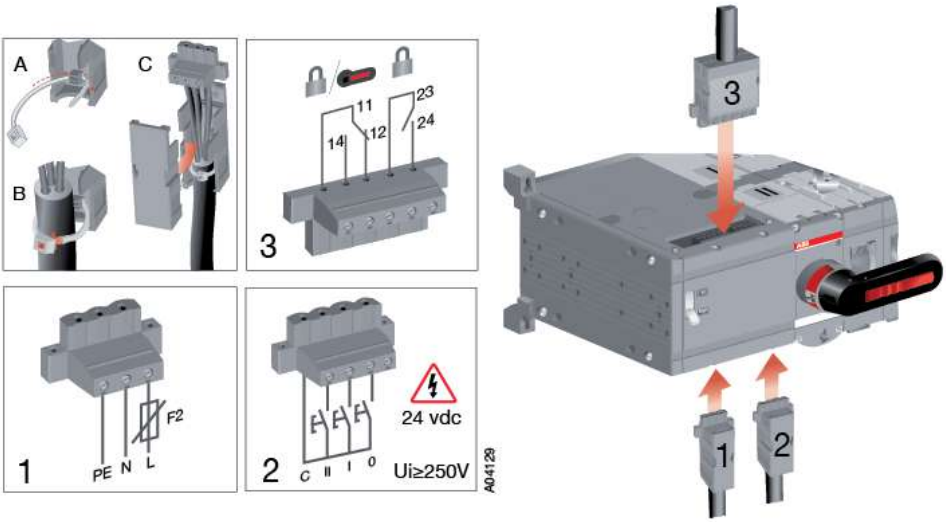

Figure 5.1 Motorized change-over switch terminals

1. Terminals for motor operator voltage supply
2. Control terminals (push buttons)
3. Terminals for state information of locking

Do not couple power for the control terminal. See the correct terminal for the power supply in Figure 5.1

The control voltage (output C = 24Vdc) on the control terminal is non-isolated, see box 2 in Figure 5.1

When relay outputs are used with inductive loads (such as relays, contactors and motors), they must be protected from voltage spikes using varistors, RC-protectors (AC current) or DC current diodes (DC current).

6. Operating

Never open any covers on the product. There may be dangerous external control voltages inside the motorized change-over switch even if the voltage is turned off.

Never handle control cables when the voltage of the motorized change-over switch or external control circuits are connected.

Exercise sufficient caution when handling the unit.

6.1 Electrical operation

The motorized change-over switches are available for remote control.

To operate the motorized change-over switch electrically:

1. Release the handle from the change-over switch panel by pressing down the locking latch under the switch panel and pulling the handle off, see Figure 6.1.

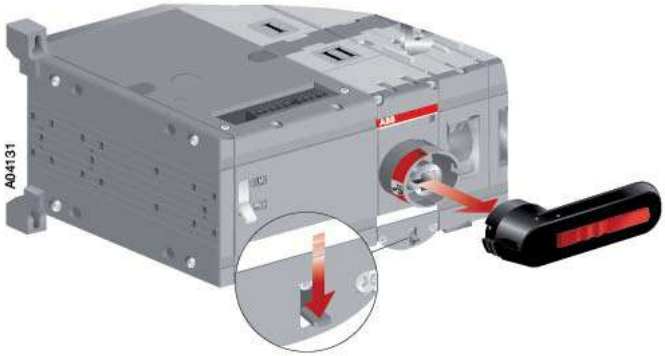

Figure 6.1 Releasing the handle

Electrical operation is disabled if the handle is attached to the change-over switch panel.

2. Turn the Motor/Manual selection switch to the Motor (M) position, see Figure 6.2.

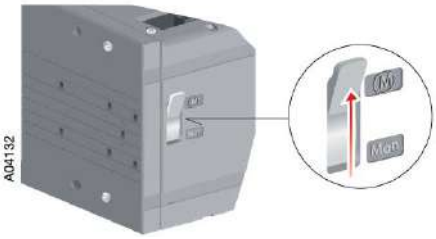

Figure 6.2 Motor/Manual selection switch in the Motor (M) position

3. Operate the motorized change-over switch with the push-buttons via impulse control or continuous control.

The motor operator is protected from overloading by a fuse (F1) under the motor operator. Only use the same type of fuse that is described on the label close to the fuse.

6.1.1 Impulse control

When using impulse control, the change-over switch is operated by electric impulses. When you press the control button, the change-over switch is driven to the corresponding position (I, 0, II). The control impulse must last more than 100ms to take effect. A new command cannot be given until the change-over switch has reached the position of the previous command. Figure 6.3 shows the operation of the change-over switch with impulse control.

If a new command is given before the switch has reached the position of the previous command, the fuse (F1) may operate.

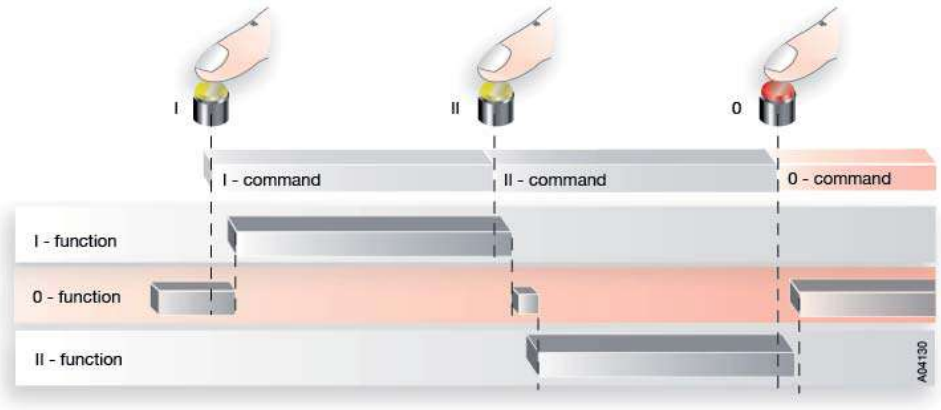

Figure 6.3 Impulse control

6.1.2 Continuous control

When using continuous control, the control command is supplied to the switch continuously. When you press the control button, the change-over switch is driven to the corresponding position (I, 0, II). Operation of position 0 will over-run control of the other positions; that is, if you simultaneously give the 0 command with another command, the change-over switch is driven to position 0. Figure 6.4 shows the operation of the change-over switch with continuous control.

The continuous control command can be given with push buttons, cam switches or with relays incorporated in PLC equipment or with other suitable contacts.

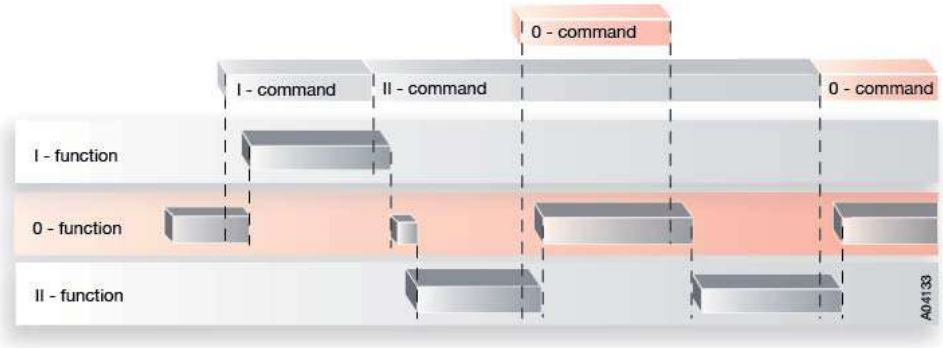

Figure 6.4 Continuous control

6.2 Manual operation by using the handle

You can operate the motorized change-over switch manually by using the handle that is included in the delivery.

To operate the motorized change-over switch manually:

1. Turn the Motor/Manual selector to the Manual (Man.) position, see Figure 6.5. The motor operator is switched off and electrical operation is prevented.



Figure 6.5 Motor/Manual selection in the Man. position

2. Attach the handle by pressing it to the change-over switch panel until it clicks into place. You can attach the handle in all positions (I, 0, II), see Figure 6.6.

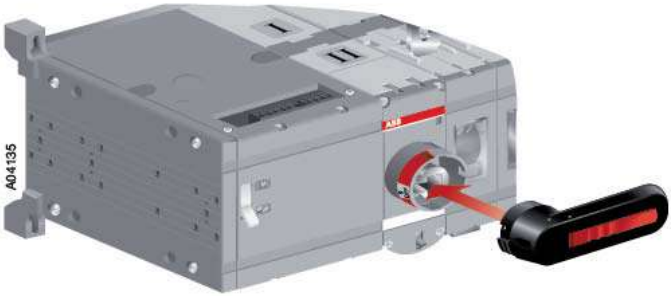

Figure 6.6 Attaching the handle

3. Operate the motorized change-over switch by turning the handle to the required position (I, 0, II).

Electrical operation is prevented when the handle is attached to the change-over switch panel.

6.3 Locking

You can lock the motorized change-over switch to a specific position.

6.3.1 Locking the electrical operation

To disable electrical operation, lock the locking latch with a padlock. After the locking latch has been locked, the change-over switch cannot be operated electrically. You can lock the electrical operation in all positions (I, 0, II).

To lock electrical operation:

1. Pull up the locking latch under the change-over switch panel.
2. Place the padlock under the latch, see Figure 6.7.

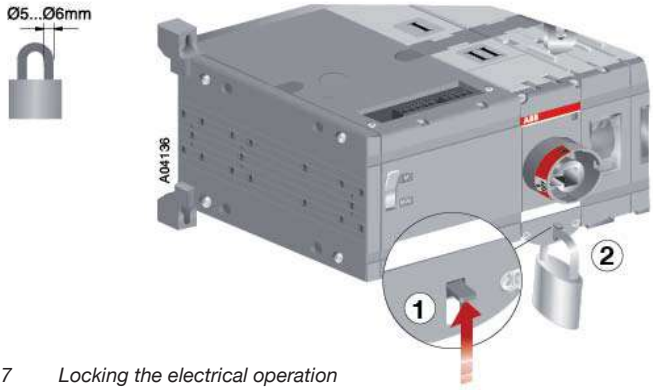

Figure 6.7 Locking the electrical operation

The handle cannot be attached when electrical operation is locked.

6.3.2 Locking the manual operation

By default, manual operation can only be locked to position 0. Locking to position I and II is optional and possible only with modifications to the change-over switch panel.

To lock manual operation:

1. Turn the handle to the required position.
2. Pull out the clip from the handle and place the padlock on the handle; see Figure 6.8



Figure 6.8 Locking the manual operation

The handle cannot be removed when padlocked to position 0.

The following chart shows the locking state information (the voltage on motor operator supply needed).

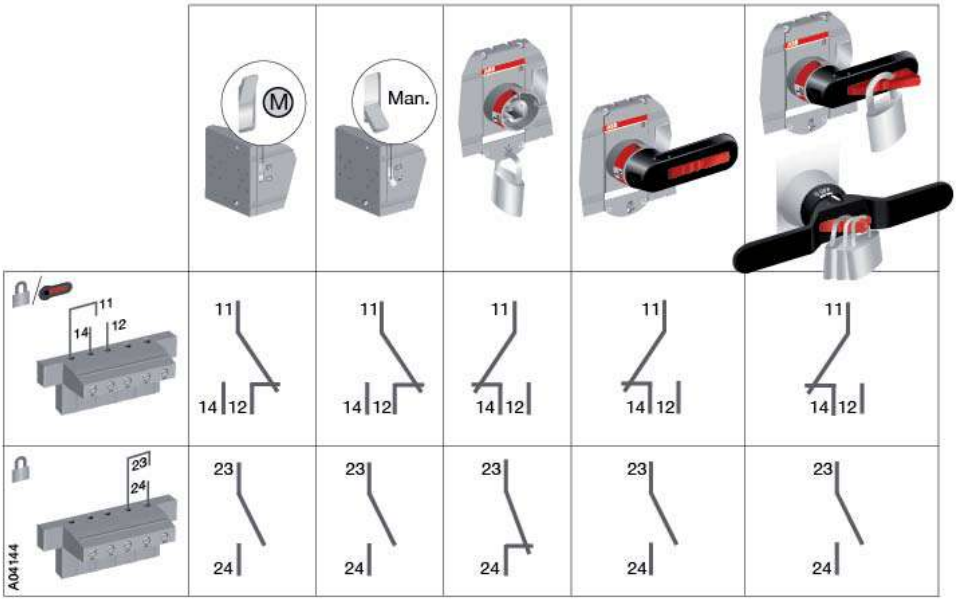

Figure 6.9 Locking state information

7. Technical data

Motor operator, control circuit	Value	Cabling
Rated operational voltage U [V]	220-240 Vac 50-60 Hz	
	110-125 Vac/dc 50-60 Hz	
	48 Vdc	
	24 Vdc	
Operating voltage range	0.85... 1.1 x U	
Operating angle	90° 0-I, I-0, 0-II, II-0; 180° I-0-II	
Operating time	See the Table 7.2	
Protection degree	IP 20, front panel	
Voltage supply	PE N L	1,5 -2,5 mm^2
Cable of the push-buttons (no SELV)	C II I 0	1,5 -2,5 mm^2
Maximum cable length	100 m	
F2	Max. MCB 16 A	
State information of locking (no SELV)		
Handle attached or motor operator locked	11-12-14 (C/O)	1,5 -2,5 mm^2
Locking motor operator	23-24 (NO)	1,5 -2,5 mm^2
Rated impulse withstand voltage U_{imp}	4 kV	
Operating temperature	-25... +55 °C	
Transportation and storage temperature	-40... +70 °C	
Altitude	Max. 2000 m	

Table 7.1 General technical data of motor operators

Type	Voltage U_e [V]	Nominal current [a] I_n [A]	Current Inrush [a] [A]	Operating time [a] I-0, 0-I, 0-II, II-0 [s]	Operating transfer time [a] I-II or II-I [s]	OFF-time when operating [a] I-II or II-I [s]
OTM160...250_C	220-240 Vac	0,2	1,3	0,4 - 1,0	1,0 - 2,0	0,4 - 1,0
OTM160...250_C	110-125 Vac/dc	0,45	2,1	0,5 - 1,2	1,1 - 2,5	0,5 - 1,1
OTM160...250_C	48 Vdc	1,1	4,4	0,5 - 1,2	1,1 - 2,5	0,5 - 1,1
OTM160...250_C	24 Vdc	3,3	16,8	0,5 - 1,0	1,0 - 2,0	0,4 - 1,0
OTM315...400_C	220-240 Vac	0,5	2,1	0,4 - 1,0	0,9 - 2,0	0,4 - 1,0
OTM315...400_C	110-125 Vac/dc	0,6	2,5	0,5 - 1,5	1,2 - 2,6	0,5 - 1,5
OTM315...400_C	48 Vdc	2,1	8,3	0,4 - 1,0	1,0 - 2,0	0,4 - 1,0
OTM315...400_C	24 Vdc	4,2	17,5	0,4 - 1,0	1,0 - 2,0	0,4 - 1,0
OTM600…800_C	220-240 Vac	0,7	2,8	0,4 - 1,0	0,9 - 2,0	0,4 - 1,0
OTM600…800_C	110-125 Vac/dc	0,8	4,6	0,6 - 1,5	1,2 - 3,0	0,6 - 1,5
OTM600…800_C	48 Vdc	2,6	8,4	0,6 - 1,6	1,2 - 3,0	0,6 - 1,6
OTM600…800_C	24 Vdc	4,0	22,4	0,5 - 1,5	1,1 - 2,5	0,5 - 1,5
OTM1000…1600_C	220-240 Vac	1,8	7,7	0,5 - 1,5	1,5 - 3,0	0,5 - 1,5
OTM1000…1600_C	110-125 Vac/dc	3,0	13,3	0,5 - 1,5	1,5 - 3,0	0,5 - 1,5
OTM1000…1600_C	48 Vdc	5,3	22,4	0,5 - 1,5	1,5 - 3,0	0,5 - 1,5
OTM1000…1600_C	24 Vdc	8,0	26,6	1,0 - 2,0	2,0 - 3,5	0,8 - 1,7
OTM2000…2500_C	220-240 Vac	1,8	7,7	0,5 - 1,5	1,5 - 3,0	0,5 - 1,5
OTM2000…2500_C	110-125 Vac/dc	3,0	13,3	0,5 - 1,5	1,5 - 3,0	0,5 - 1,5
OTM2000…2500_C	48 Vdc	5,3	22,4	0,5 - 1,5	1,5 - 3,0	0,5 - 1,5
OTM2000…2500_C	24 Vdc	8,0	26,6	1,0 - 2,0	2,0 - 3,5	0,8 - 1,7

[a] Under nominal conditions

Table 7.2 Specified technical data of motor operators

Measurement	Value
Handle attached or motor operator locked	11-12-14 (C/O): 5 A AC-1 / 250 V
Locking motor operator	23-24 (NO): 5 A AC-1 / 250 V
SCPD	Max. MCB C2A

Table 7.3 State information

8. Accessories

8.1 Terminal clamp sets

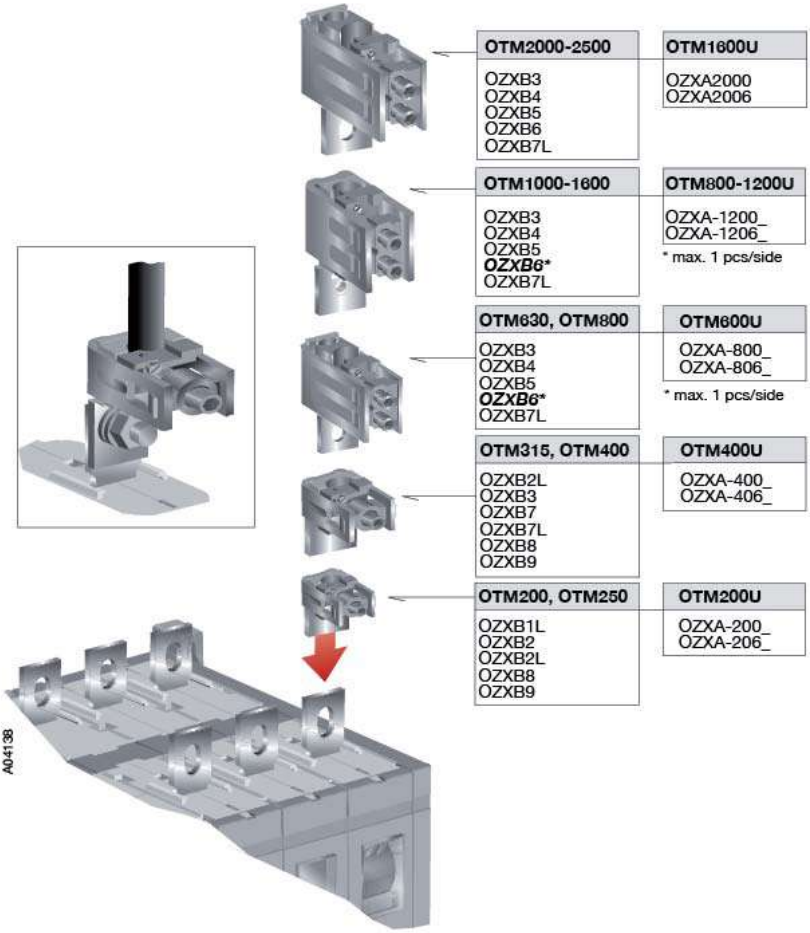

*Figure 8.1 Mounting of the terminal clamp sets, types OZXB_ and OZXA_*

8.2 Bridging bars

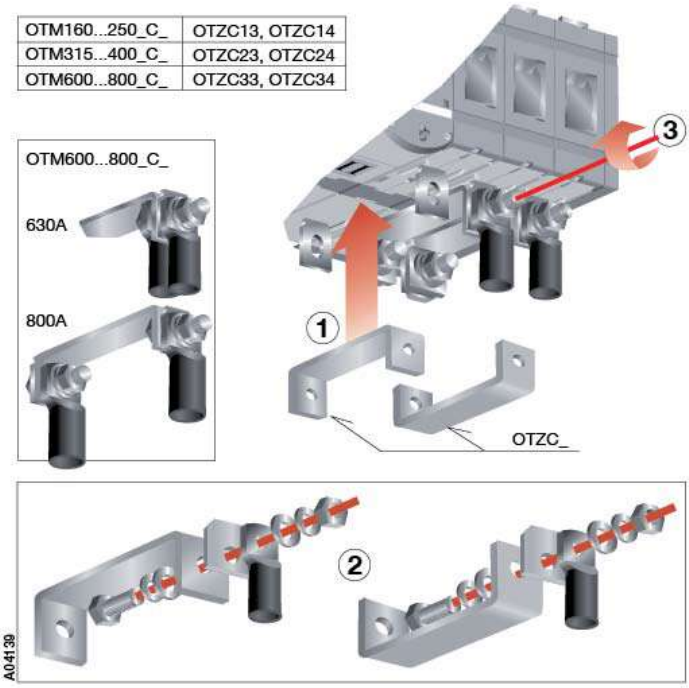

Figure 8.2 *Mounting of the bridging bars (type OTZC_) to the motorized change-over switches OTM160_C_...800E_C_*

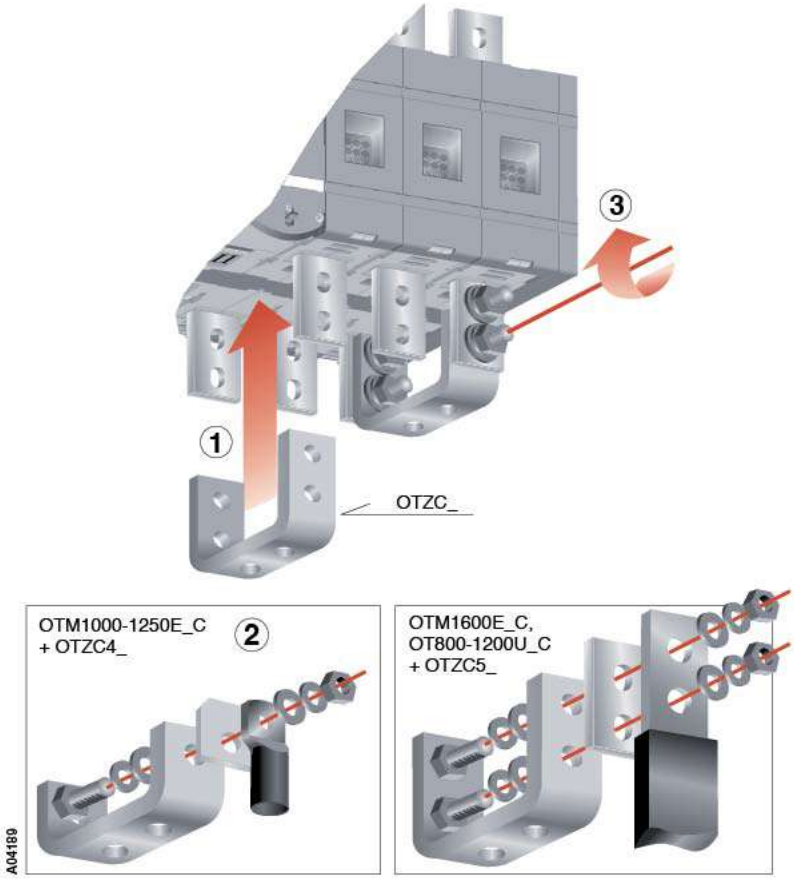

Figure 8.3 *Mounting of the bridging bars (type OTZC_) to the motorized change-over switches OTM1000...1600E_C_ and OTM800...1200U_C_*

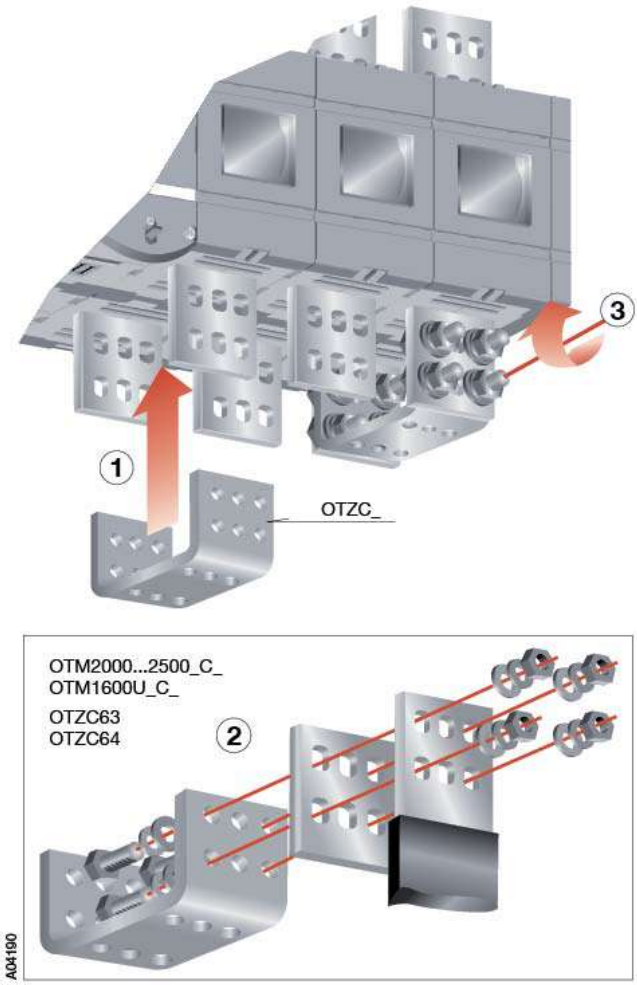

Figure 8.4 *Mounting of the bridging bars (type OTZC_) to the motorized change-over switches OTM2000...2500E_C_ and OTM1600U_C_*

8.3 Terminal shrouds

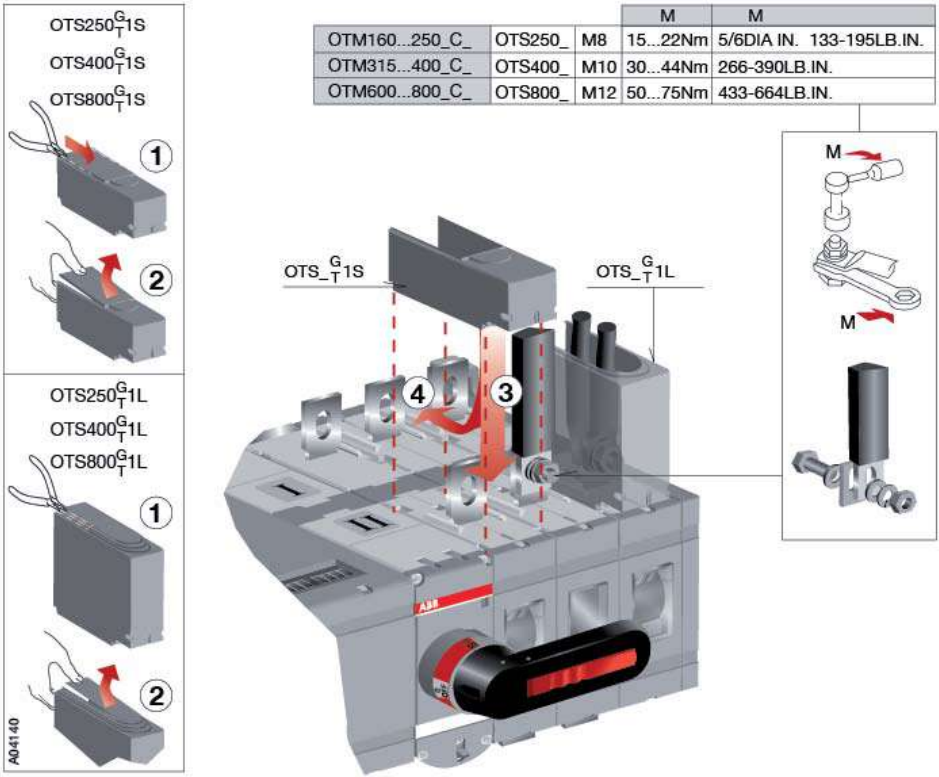

			M	M
OTM160...250_C_	OTS250_	M8	15...22Nm	5/6DIA IN. 133-195LB.IN.
OTM315...400_C_	OTS400_	M10	30...44Nm	266-390LB.IN.
OTM600...800_C_	OTS800_	M12	50...75Nm	433-664LB.IN.

*Figure 8.5 Mounting of the terminal shrouds (type OTS_) to the motorized change-over switches OTM160_C_...800E_C_*

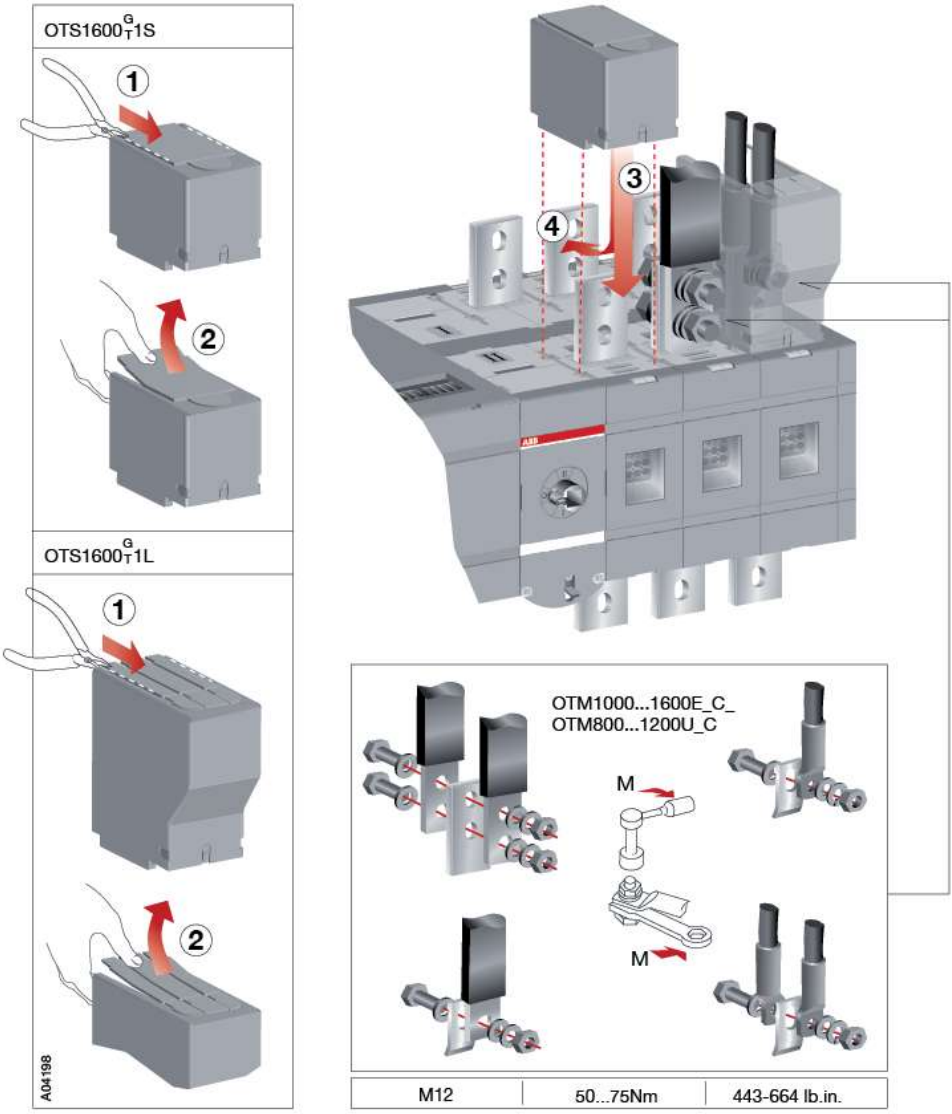

Figure 8.6 *Mounting of the terminal shrouds (type OTS_) to the motorized change-over switches OTM1000...1600E_C_ and OTM800...1200U_C_*

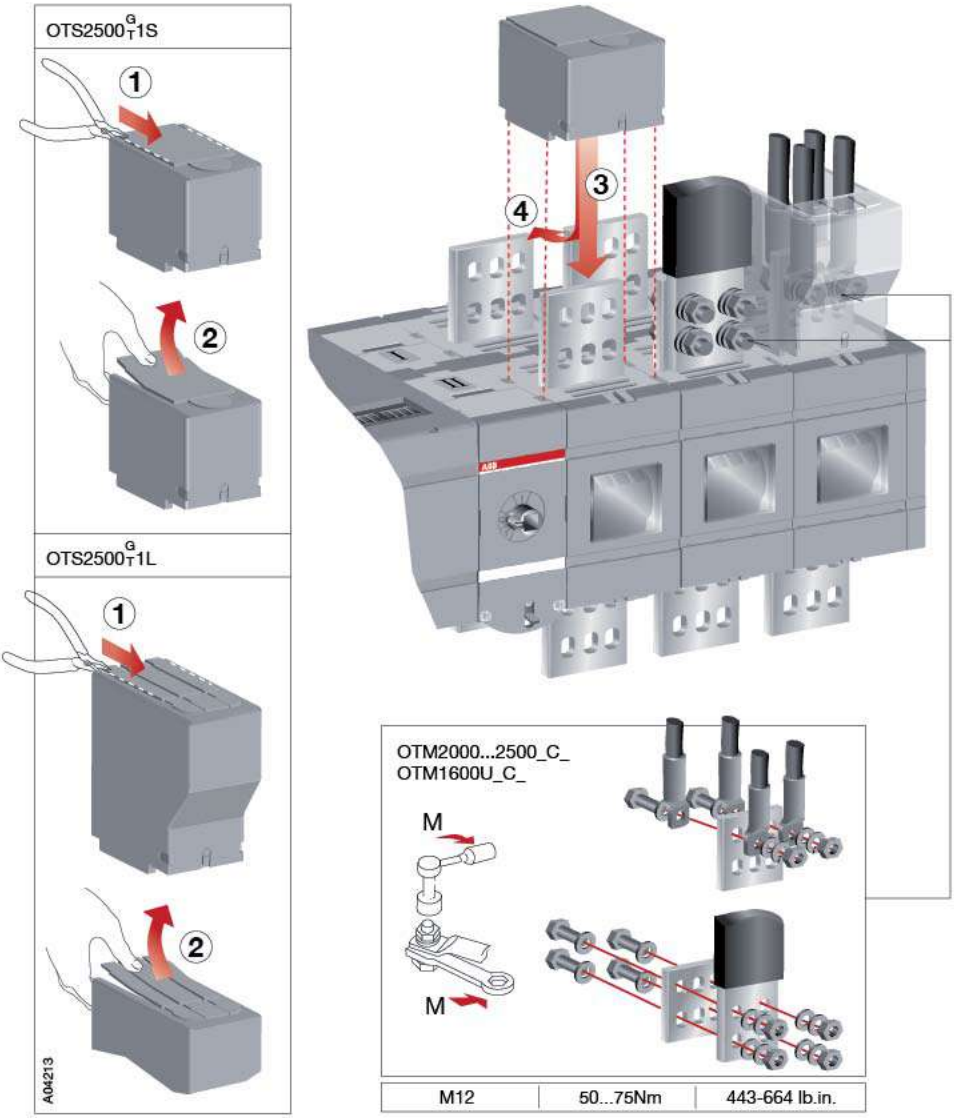

Figure 8.7 *Mounting of the terminal shrouds (type OTS_) to the motorized change-over switches OTM2000...2500_C_ and OTM1600U_C_*

8.4 Auxiliary contact blocks

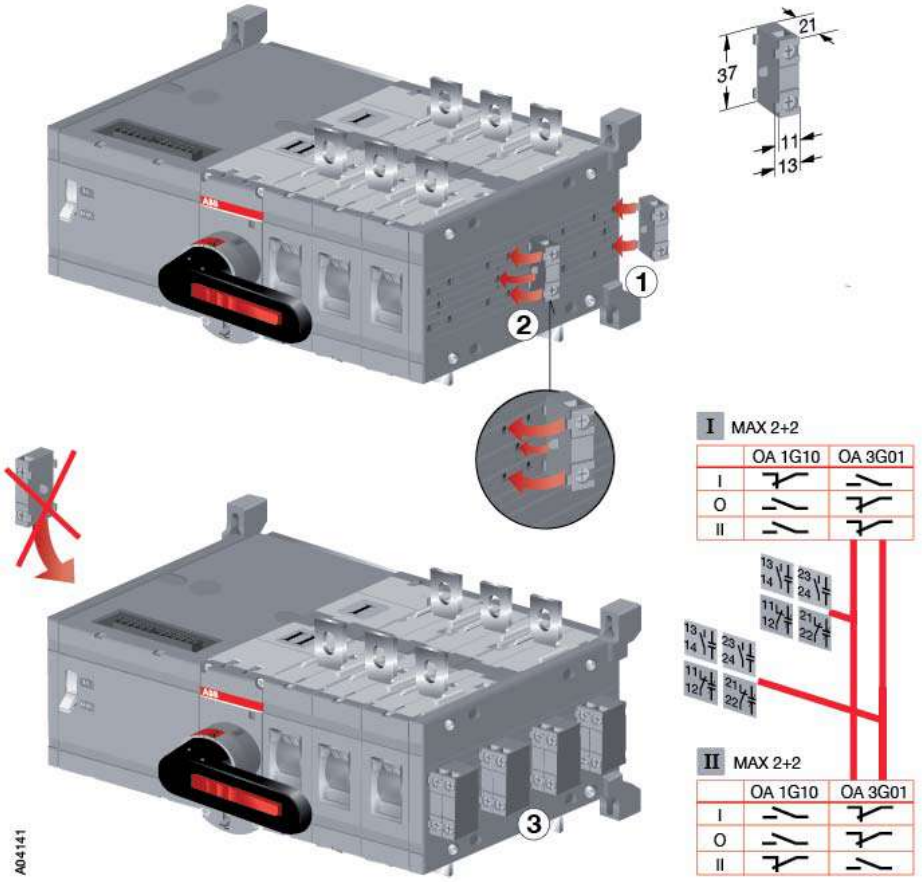

*Figure 8.8 Mounting of the auxiliary contact blocks, type OA_*

8.5 Handle and spare fuse storage

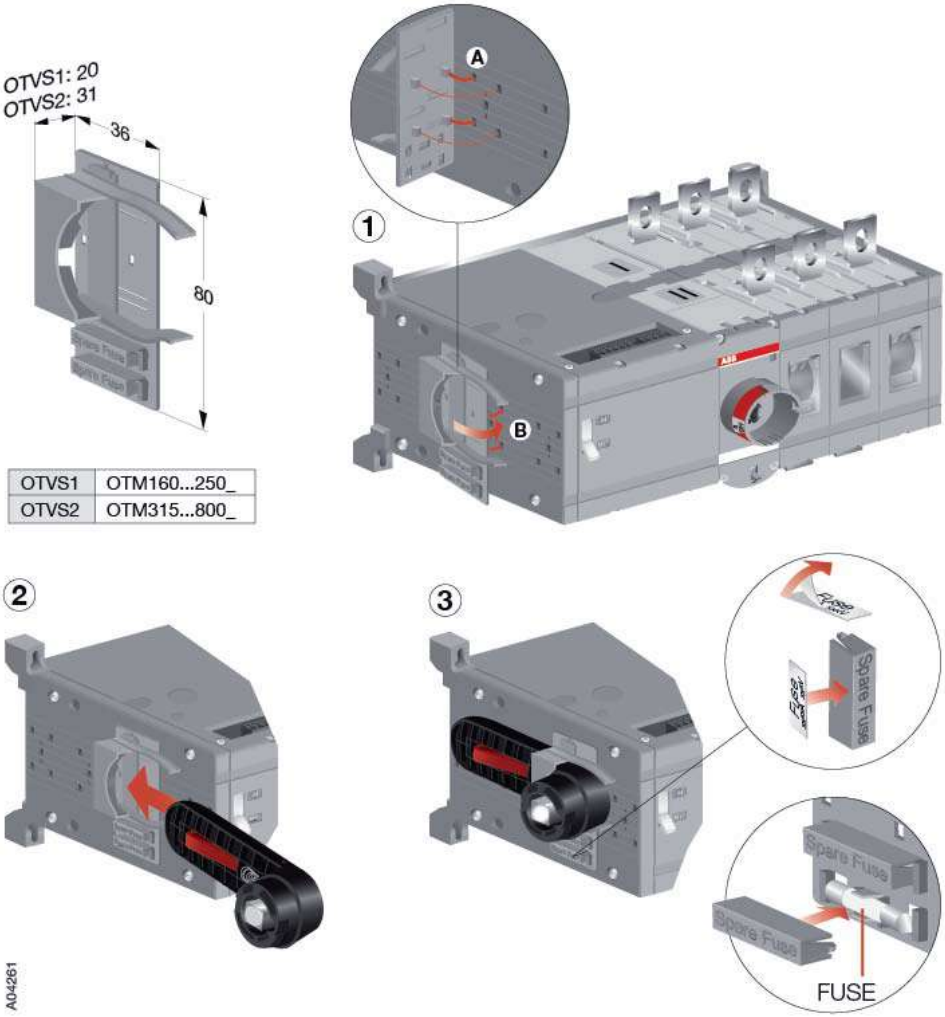

OTVS1	OTM160...250_
OTVS2	OTM315...800_

Figure 8.9 *Handle and spare fuses can be stored on the motorized change-over switch by mounting the accessory OTVS_ .*

9. UL standard switches

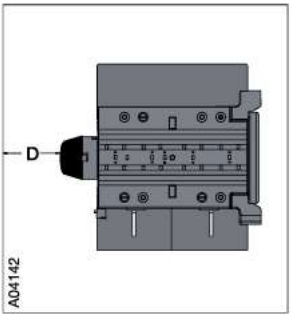

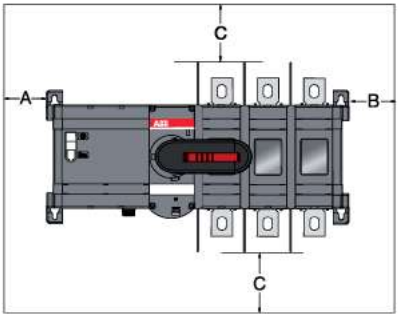

	Current	Height	Width	Depth
OTM200U_C	200 A	406 mm/16 in	305 mm/12 in	203 mm/8 in
OTM400U_C	400 A	610 mm/24 in	356 mm/14 in	254 mm/10 in
OTM600U_C	600 A	610 mm/24 in	700 mm/28 in	400 mm/16 in
OTM800...1200U_C	800...1200 A	1220 mm/48 in	610 mm/24 in	400 mm/16 in
OTM1600U_C	1600 A	1200 mm/47 in	750 mm/30 in	400 mm/16 in

	A	B	D
OTM200...1600U_C	0	13 mm/0,5 in	13 mm/0,5 in

OTM200U_C			
Cable size		Cable size	
AWG	C	MCM	C
4-3	100 mm/4 in	250	200 mm/8 in
2	100 mm/4 in	300	250 mm/10 in
1	100 mm/4 in		
1/0	125 mm/5 in		
2/0	150 mm/6 in		
3/0-4/0	175 mm/7 in		

OTM400U_C			
Cable size		Cable size	
AWG	C	MCM	C
2	100 mm/4 in	250	250 mm/8 in
1	100 mm/4 in	300	250 mm/10 in
1/0	125 mm/5 in	350	350 mm/12 in
2/0	150 mm/6 in		
3/0-4/0	175 mm/7 in		

OTM600...1200U_C			
Cable size		Cable size	
AWG	C	MCM	C
2	100 mm/4 in	250	200 mm/8 in
1	100 mm/4 in	300	250 mm/10 in
1/0	125 mm/5 in	350	300 mm/12 in
2/0	150 mm/6 in	400	330 mm/13 in
3/0-4/0	175 mm/7 in	500	356 mm/14 in
		600	381 mm/15 in

OTM1600U_C	
Cable size	
MCM	C
250	200 mm/8 in
300	250 mm/10 in
350	300 mm/12 in
400	330 mm/13 in
500	356 mm/14 in
600	381 mm/15 in

Figure 9.1 Clearances per UL 98, minimum enclosure size or equivalent volume

9.1 Phase barriers

Phase barriers or shrouds (see section 8.3) must be used to maintain a clearance of 1 inch on the motorized change-over switch types: OTM600U_C_, if the conductors are wider than 39 mm /1,54 in (phase barrier 68838), on OTM800...1200U_C_, if the lugs are wider than 54 mm /2,13 in (phase barrier 68912) and on OTM1600U_C_, if the lugs are wider than 100 mm / 3,94 in (phase barrier 68912).

Phase barriers 68912 must be used on motorized change-over switches types OTM1000-2500_C_ if the voltage is > 415 V.

The types for the package of 6 barriers are: 68838 = OTB800/6C and 68912 = OTB1600/6C .

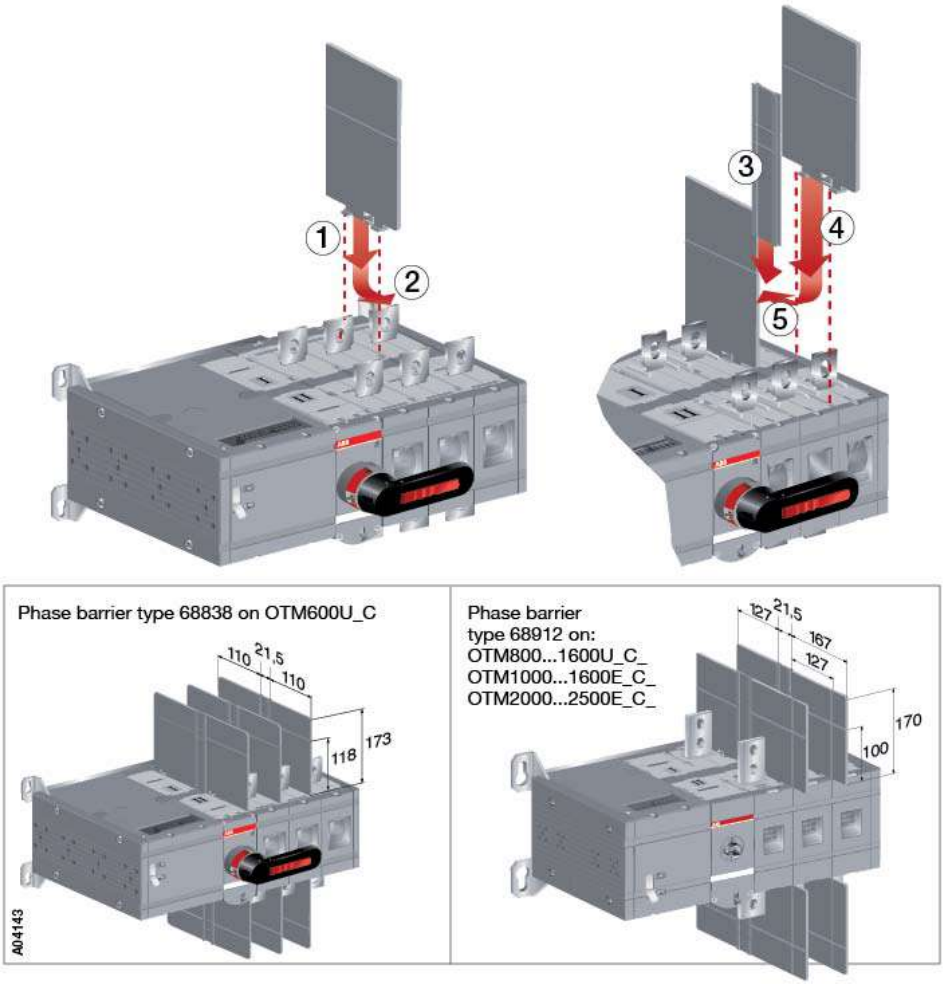

Figure 9.2 OTM600U_C, OTM800...1600U_C_ and OTM1000...2500E_C_ mounting of phase barriers

Printed by: Waasa Graphics Oy, Vaasa Finland
Producted by: KATANN Document Factory Oy, Vaasa Finland



ABB Oy
Low Voltage Products
P.O Box 622
FI-65101 VAASA, Finland
Telephone +358 10 22 11
Telefax +358 10 22 45708
www.abb.com

The technical data and dimensions are valid at the time of printing. We reserve the right to subsequent alterations.