Fuji Electric

*Innovating Energy Technology*

High Performance Inverter

# FRENIC-Ace




FRENIC Ace

FUJI ELECTRIC INVERTERS

*The FRENIC-Ace Inverters are full feature drives offering great value and maintain high performance through optimal design for a wide range of applications for various machines and devices.*

24A1-E-0042f

# The Next Generation Of Inverters Have Arrived




## Enjoy A Full Range Of Applications

The standard inverter for the next generation, the FRENIC-Ace, can be used in most types of application—from fans and pumps to specialized machinery.

| Nominal applied motor [kW(HP*)] | 3-phase 400V(460V) series | | | | | | | | 3-phase 200V(230V) series | | | | 1-phase 200V series | |
|---|---|---|---|---|---|---|---|---|---|---|---|---|---|---|
| | ND rating | | HD rating | | HND rating | | HHD rating | | HND rating | | HHD rating | | HHD rating | |
| | Model | Rated output current | Model | Rated output current | Model | Rated output current | Model | Rated output current | Model | Rated output current | Model | Rated output current | Model | Rated output current |
| 0.1(1/8) | | | | | | | | | | | FRN0001E2■-2□ | 0.8A | FRN0001E2■-7□ | 0.8A |
| 0.2(1/4) | | | | | | | | | | | FRN0002E2■-2□ | 1.6A | FRN0002E2■-7□ | 1.6A |
| 0.4(1/2) | | | | | | | FRN0002E2■-4□ | 1.5A | FRN0002E2■-2□ | 2A | FRN0004E2■-2□ | 3A | FRN0003E2■-7□ | 3A |
| 0.75(1) | FRN0002E2■-4□ | 2.1A | FRN0002E2■-4□ | 1.8A | FRN0002E2■-4□ | 1.8A | FRN0004E2■-4□ | 2.5A | FRN0004E2■-2□ | 3.5A | FRN0006E2■-2□ | 5A | FRN0005E2■-7□ | 5A |
| 1.1(1.5) | | | FRN0004E2■-4□ | 3.4A | FRN0004E2■-4□ | 3.4A | | | FRN0006E2■-2□ | 6A | | | | |
| 1.5(2) | FRN0004E2■-4□ | 4.1A | | | | | FRN0006E2■-4□ | 4.2A | | | FRN0010E2■-2□ | 8A | FRN0008E2■-7□ | 8A |
| 2.2(3) | FRN0006E2■-4□ | 5.5A | FRN0006E2■-4□ | 5A | FRN0006E2■-4□ | 5A | FRN0007E2■-4□ | 5.5A | FRN0010E2■-2□ | 9.6A | FRN0012E2■-2□ | 11A | FRN0011E2■-7□ | 11A |
| 3(4) | FRN0007E2■-4□ | 6.9A | FRN0007E2■-4□ | 6.3A | FRN0007E2■-4□ | 6.3A | | | FRN0012E2■-2□ | 12A | | | | |
| 3.7(5) | | | | | | | FRN0012E2■-4□ | 9A | | | FRN0020E2■-2□ | 17.5A | | |
| 5.5(7.5) | FRN0012E2■-4□ | 12A | FRN0012E2■-4□ | 11.1A | FRN0012E2■-4□ | 11.1A | FRN0022E2■-4□ | 13A | FRN0020E2■-2□ | 19.6A | FRN0030E2S-2□ | 25A | | |
| 7.5(10) | | | FRN0022E2■-4□ | 17.5A | FRN0022E2■-4□ | 17.5A | FRN0029E2■-4□ | 18A | FRN0030E2S-2□ | 30A | FRN0040E2S-2□ | 33A | | |
| 11(15) | FRN0022E2■-4□ | 21.5A | FRN0029E2■-4□ | 23A | FRN0029E2■-4□ | 23A | FRN0037E2■-4□ | 24A | FRN0040E2S-2□ | 40A | FRN0056E2S-2□ | 47A | | |
| 15(20) | FRN0029E2■-4□ | 28.5A | FRN0037E2■-4□ | 31A | FRN0037E2■-4□ | 31A | FRN0044E2■-4□ | 30A | FRN0056E2S-2□ | 56A | FRN0069E2S-2□ | 60A | | |
| 18.5(25) | FRN0037E2■-4□ | 37A | FRN0044E2■-4□ | 38A | FRN0044E2■-4□ | 38A | FRN0059E2■-4□ | 39A | FRN0069E2S-2□ | 69A | FRN0088E2S-2□ | 76A | | |
| 22(30) | FRN0044E2■-4□ | 44A | FRN0059E2■-4□ | 45A | FRN0059E2■-4□ | 45A | FRN0072E2■-4□ | 45A | FRN0088E2S-2□ | 88A | FRN0115E2S-2□ | 90A | | |
| 30(40) | FRN0059E2■-4□ | 59A | FRN0072E2■-4□ | 60A | FRN0072E2■-4□ | 60A | FRN0085E2■-4□ | 60A | FRN0115E2S-2□ | 115A | | | | |
| 37(50) | FRN0072E2■-4□ | 72A | FRN0085E2■-4□ | 75A | FRN0085E2■-4□ | 75A | FRN0105E2■-4□ | 75A | | | | | | |
| 45(60) | FRN0085E2■-4□ | 85A | FRN0105E2■-4□ | 91A | FRN0105E2■-4□ | 91A | FRN0139E2■-4□ | 91A | | | | | | |
| 55(75) | FRN0105E2■-4□ | 105A | FRN0139E2■-4□ | 112A | FRN0139E2■-4□ | 112A | FRN0168E2■-4□ | 112A | | | | | | |
| 75(100) | FRN0139E2■-4□ | 139A | FRN0168E2■-4□ | 150A | FRN0168E2■-4□ | 150A | FRN0203E2■-4□ | 150A | | | | | | |
| 90(125) | FRN0168E2■-4□ | 168A | FRN0203E2■-4□ | 176A | FRN0203E2■-4□ | 176A | FRN0240E2■-4□ | 176A | | | | | | |
| 110(150) | FRN0203E2■-4□ | 203A | FRN0240E2■-4□ | 210A | FRN0240E2■-4□ | 210A | FRN0290E2■-4□ | 210A | | | | | | |
| 132(200) | FRN0240E2■-4□ | 240A | FRN0290E2■-4□ | 253A | FRN0290E2■-4□ | 253A | FRN0361E2■-4□ | 253A | | | | | | |
| 160(250) | FRN0290E2■-4□ | 290A | FRN0361E2■-4□ | 304A | FRN0361E2■-4□ | 304A | FRN0415E2■-4□ | 304A | | | | | | |
| 200(300) | FRN0361E2■-4□ | 361A | FRN0415E2■-4□ | 377A | FRN0415E2■-4□ | 377A | FRN0520E2■-4□ | 377A | | | | | | |
| 220(350) | FRN0415E2■-4□ | 415A | FRN0520E2■-4□ | 415A | FRN0520E2■-4□ | 415A | FRN0590E2■-4□ | 415A | | | | | | |
| 250(400) | | | FRN0590E2■-4□ | 477A | | | | | | | | | | |
| 280(450) | FRN0520E2■-4□ | 520A | | | FRN0590E2■-4□ | 520A | | | | | | | | |
| 315(500) | FRN0590E2■-4□ | 590A | | | | | | | | | | | | |
| Rating condition | Overload current rating 120% -1min | Max. ambient temp. 40°C | Overload current rating 150% -1min | Max. ambient temp. 40°C | Overload current rating 120% -1min | Max. ambient temp. 50°C | Overload current rating 150% -1min, 200% -0.5sec | Max. ambient temp. 50°C | Overload current rating 120% -1min | Max. ambient temp. 50°C | Overload current rating 150% -1min, 200% -0.5sec | Max. ambient temp. 50°C | Overload current rating 150% -1min, 200% -0.5sec | Max. ambient temp. 50°C |
| Application | Fans, pumps<br>Wire drawing | | Vertical conveyance | | Fans, pumps<br>Wire drawing | | Vertical conveyance<br>Winding machines<br>Printing machines | | Fans, pumps<br>Wire drawing | | Vertical conveyance<br>Winding machines<br>Printing machines | | Vertical conveyance<br>Winding machines<br>Printing machines | |

*HP@ 60Hz 3PH230V 3PH460V.





# Customizable Logic

Customizable logic function is available as a standard feature. FRENIC-Ace has built-in customizable logic functions with a maximum of 200 steps including both digital and analog operation functions, giving customers the ability to customize their inverters—from simple logic functions to full-scale programming. Fuji Electric also has plans to offer programming templates for wire drawing machines, hoists, spinning machines, and other applications so that the FRENIC-Ace can be used as a dedicated purpose inverter.

**Example: Hoist crane application**

Programming the FRENIC-Ace main unit with the required logic for controlling a hoist

- (1) Set speed program
- (2) Reset the alarm by using the push-button switch
- (3) Mechanical limit switch function
- (4) Detect load
- (5) Automatic speed drive when no load is detected
- (6) Overload stop function

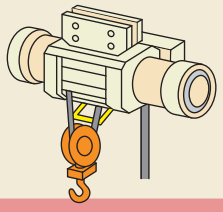

Dedicated/specialized functions for hoist application implemented by using customizable logic

# Superior Flexibility

FRENIC-Ace has readily available interface cards and various types of fieldbus / network to maximize its flexibility.

| Option Category | Option Name | Mounting adapter for option card | | |
|---|---|---|---|---|
| | | 0002 to 0044 (400V), 0001 to 0069 (200V) | 0059 to 0072 (400V), 0069 to 0115 (200V) | more than 0085 (400V) |
| Terminal block | RS-485 communications card | Unnecessary | | |
| | PG interface (5V) card | | | |
| | PG interface (12/15V) card | | | |
| Communication *1 | DeviceNet communication card | The adapter is mounted on the front side of the inverter. (OPC-E2-ADP1) | The adapter is mounted inside of the inverter. (OPC-E2-ADP2) | The adapter is mounted inside of the inverter. (OPC-E2-ADP3) |
| | CC-Link communication card | | | |
| | PROFIBUS-DP communication card | | | |
| | EtherNet/IP communication card | | | |
| | ProfiNet-RT communication card | | | |
| | CANopen communication card | | | |
| Input / Output interface *1 | Digital Input / Output interface card | | | |
| | Analog Output interface interface card | | | |

*1 Available by the combination use of the mounting adapter.

# Wide Variety Of Functions As A Standard Feature

- Sensorless dynamic torque vector control
- Motor vector control with PG (with optional card)
- Synchronous motor with sensorless vector control
- 2-channel on-board RS485 communications port
- Standard CANopen compatibility
- Removable keypad device
- Removable control terminal block board

# Multi-Function Keypad (option)

FRENIC-Ace has two different multi-function keypads available

- Multi-function keypad with LCD display: Enhanced HMI functionality
- Keypad with USB port : Connect to a computer for more efficient operation (set-up, troubleshooting, maintenance, etc)



Multi-function keypad with LCD screen

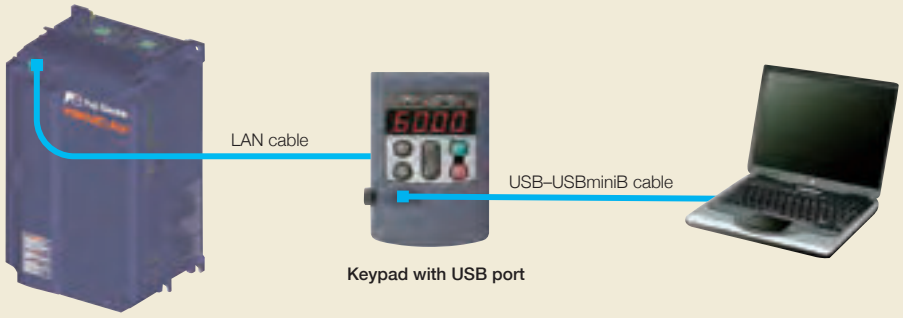


Keypad with USB port

# Functional Safety

FRENIC-Ace is equipped with STO functional safety function as a standard. Therefore output circuit magnetic contactors are not required for safe stop implementation. Enhanced standard features position FRENIC-Ace ahead of its class (Safety input: 2CH, output: 1CH).

**■Complies with (coming soon)**

EN ISO 13849-1: 2008, Cat.3 / PL=e
IEC/EN 60204-1: 2005/2006 Stop category 0
IEC/EN 61508-1 to -7: 2010 SIL3
IEC/EN 61800-5-2: 2007 SIL3 (Safety feature: STO)
IEC/EN 62061: 2005 SIL3

# 10 Years Lifetime Design

FRENIC-Ace components have a design life of ten years.
A longer maintenance cycle also helps to reduce running costs.

| | | | |
|---|---|---|---|
| Design life *2 | Main circuit capacitor | | 10 years *1 |
| | Electrolytic capacitors on PCB | | 10 years *1 |
| | Cooling fan | | 10 years *1 |
| | Life conditions | Ambient temperature | +40°C (104°F) |
| | | Load rate | 100% (HHD specifications)<br>80% (HND/HD/ND specifications) |

*1 ND specifications have a rated current of two sizes higher than HHD specifications, so the life is 7 years.
*2 The designed lives are the calculated values and not the guaranted ones.

## Standards

**■RoHS Directive**

Standard compliance with European regulations that limit the use of specific hazardous substances (RoHS)

| | |
|---|---|
| <Six hazardous substances> | Lead, mercury, cadmium, hexavalent chromium, polybrominated biphenyl (PBB), polybrominated biphenyl ether (PBDE) |
| <About RoHS> | Directive 2002/95/EC, issued by the European Parliament and European Council, limits the use of specific hazardous substances in electrical and electronic devices. |

## Global Compliance

**■Standard compliance**

EC Directives (CE Mark)

UL Standard (cUL Certified)

KC*

* Only FRN□□□E2■-○G●



# Standard Model Specifications

## Three phase 400V class series

| Items | | | Specifications | | | | | | | | | | |
|---|---|---|---|---|---|---|---|---|---|---|---|---|---|
| Type | | | FRN□□□□E2S-4GA, FRN□□□□E2S-4GB | | | | | FRN□□□□E2S-4E, FRN□□□□E2S-4GB | | | | | FRN□□□□E2S-4GB |
| | | | 0002 | 0004 | 0006 | 0007 | 0012 | 0022 | 0029 | 0037 | 0044 | 0059 | 0072 |
| Nominal applied motor *1 [kW(HP)] | | ND | 0.75(1) | 1.5(2) | 2.2(3) | 3.0(4) | 5.5(7.5) | 11(15) | 15(20) | 18.5(25) | 22(30) | 30(40) | 37(50) |
| | | HD | 0.75(1) | 1.1(1.5) | 2.2(3) | 3.0(4) | 5.5(7.5) | 7.5(10) | 11(15) | 15(20) | 18.5(25) | 22(30) | 30(40) |
| | | HND | 0.75(1) | 1.1(1.5) | 2.2(3) | 3.0(4)*10 | 5.5(7.5)*10 | 7.5(10) | 11(15) | 15(20) | 18.5(25) | 22(30) | 30(40) |
| | | HHD | 0.4(1/2) | 0.75(1) | 1.5(2) | 2.2(3) | 3.7(5) | 5.5(7.5) | 7.5(10) | 11(15) | 15(20) | 18.5(25) | 22(30) |
| Output ratings | Rated capacity [kVA] *2 | ND | 1.6 | 3.1 | 4.2 | 5.3 | 9.1 | 16 | 22 | 28 | 34 | 45 | 55 |
| | | HD | 1.4 | 2.6 | 3.8 | 4.8 | 8.5 | 13 | 18 | 24 | 29 | 34 | 46 |
| | | HND | 1.4 | 2.6 | 3.8 | 4.8*10 | 8.5*10 | 13 | 18 | 24 | 29 | 34 | 46 |
| | | HHD | 1.1 | 1.9 | 3.2 | 4.2 | 6.9 | 9.9 | 14 | 18 | 23 | 30 | 34 |
| | Rated voltage [V] *3 | | Three-phase 380 to 480V (With AVR) | | | | | | | | | | |
| | Rated current [A] *4 | ND | 2.1 | 4.1 | 5.5 | 6.9 | 12 | 21.5 | 28.5 | 37.0 | 44.0 | 59.0 | 72.0 |
| | | HD | 1.8 | 3.4 | 5.0 | 6.3 | 11.1 | 17.5 | 23.0 | 31.0 | 38.0 | 45.0 | 60.0 |
| | | HND | 1.8 | 3.4 | 5.0 | 6.3*10 | 11.1*10 | 17.5 | 23.0 | 31.0 | 38.0 | 45.0 | 60.0 |
| | | HHD | 1.5 | 2.5 | 4.2 | 5.5 | 9.0 | 13.0 | 18.0 | 24.0 | 30.0 | 39.0 | 45.0 |
| | Overload capability | ND, HND | 120% of nominal current for 1min | | | | | | | | | | |
| | | HD | 150% of nominal current for 1min | | | | | | | | | | |
| | | HHD | 150% of nominal current for 1min or 200% of nominal current for 0.5s | | | | | | | | | | |
| Input ratings | Main power supply | | Three-phase 380 to 480V (With AVR) | | | | | | | | | | |
| | Voltage/frequency variations | | Voltage: +10 to -15% (Voltage unbalance:2% or less *8, Frequency: +5 to -5%) | | | | | | | | | | |
| | Rated current without DCR *5 [A] | ND | 2.7 | 4.8 | 7.3 | 11.3 | 16.8 | 33.0 | 43.8 | 52.3 | 60.6 | 77.9 | 94.3 |
| | | HD | 2.7 | 3.9 | 7.3 | 11.3 | 16.8 | 23.2 | 33.0 | 43.8 | 52.3 | 60.6 | 77.9 |
| | | HND | 2.7 | 3.9 | 7.3 | 11.3*10 | 16.8*10 | 23.2 | 33.0 | 43.8 | 52.3 | 60.6 | 77.9 |
| | | HHD | 1.7 | 3.1 | 5.9 | 8.2 | 13.0 | 17.3 | 23.2 | 33.0 | 43.8 | 52.3 | 60.6 |
| | Rated current with DCR *5 [A] | ND | 1.5 | 2.9 | 4.2 | 5.8 | 10.1 | 21.1 | 28.8 | 35.5 | 42.2 | 57.0 | 68.5 |
| | | HD | 1.5 | 2.1 | 4.2 | 5.8 | 10.1 | 14.4 | 21.1 | 28.8 | 35.5 | 42.2 | 57.0 |
| | | HND | 1.5 | 2.1 | 4.2 | 5.8*10 | 10.1*10 | 14.4 | 21.1 | 28.8 | 35.5 | 42.2 | 57.0 |
| | | HHD | 0.85 | 1.6 | 3.0 | 4.4 | 7.3 | 10.6 | 14.4 | 21.1 | 28.8 | 35.5 | 42.2 |
| | Required power supply capacity *6 [kVA] | ND | 1.1 | 2.1 | 3.0 | 4.1 | 7.0 | 15 | 20 | 25 | 29 | 39 | 47 |
| | | HD | 1.1 | 1.5 | 3.0 | 4.1 | 7.0 | 10 | 15 | 20 | 25 | 29 | 39 |
| | | HND | 1.1 | 1.5 | 3.0 | 4.1*10 | 7.0*10 | 10 | 15 | 20 | 25 | 29 | 39 |
| | | HHD | 0.6 | 1.2 | 2.1 | 3.1 | 5.1 | 7.3 | 10 | 15 | 20 | 25 | 29 |
| Braking | Braking torque *7 [%] | ND | 53% | 50% | 48% | 29% | 27% | 12% | | | | | |
| | | HD | 53% | 68% | 48% | 29% | 27% | 15% | | | | | |
| | | HND | 53% | 68% | 48% | 29%*10 | 27%*10 | 15% | | | | | |
| | | HHD | 100% | | 70% | 40% | | 20% | | | | | |
| | DC braking | | Starting frequency: 0.0 to 60.0Hz, Braking time: 0.0 to 30.0s, Braking level: 0 to 60% (ND spec.), 0 to 80% (HD/HND spec.), 0 to 100% (HHD spec.) of nominal current | | | | | | | | | | |
| | Braking chopper | | Built-in | | | | | | | | | | |
| | Minimum connectable resistance[ohm] | | 200 | | 160 | | 130 | 80 | 60 | 40 | 34.4 | 16 | |
| | Braking resistor | | Option | | | | | | | | | | |
| DC reactor (DCR) | | ND | Option | | | | | | | | | | |
| | | HND, HD | Option | | | | | | | | | | |
| | | HHD | Option | | | | | | | | | | |
| Enclosure (IEC60529) | | | IP20, UL open type | | | | | | | | | | |
| Cooling method | | | Natural cooling | | Fan cooling | | | | | | | | |
| Mass [kg] | | | 1.2 | 1.5 | 1.5 | 1.6 | 1.9 | 5.0 | 5.0 | 8.0 | 9.0 | 9.5 | 10 |

*1 Fuji 4-pole standard motor. At the selection of the inverter rating, consider not only the rating capacity(kW) is enough but also inverter output current is larger than selected the motor's nominal current.
*2 Rated capacity is calculated by assuming the output rated voltage as 440 V.
*3 The output voltage cannot exceed the power supply voltage.
*4 When the carrier frequency (F26) is set to below value or higher, the inverter is sure to be necessary to derate their nominal current.
HHD spec.---type 0002 to 0012 : 8kHz, type 0022 to 0168 : 10kHz,
type 0203 to 0590 : 6kHz
HND spec.---type 0002 to 0012 : 8kHz, type 0022 to 0059 : 10kHz,
type 0072 to 0168 : 6kHz, type 0203 to 0590 : 4kHz
HD,ND spec.---All type : 4kHz
The rated output current at HD/ND spec. is decreased 2% for every 1 °C (1.8 °F) when ambient temperature is +40 °C (+104 °F) or more.
*5 The value is calculated assuming that the inverter is connected with a power supply with the capacity of 500 kVA
(or 10 times the inverter capacity if the inverter capacity exceeds 50 kVA) and %X is 5%.
Be sure to use the DCR when applicable motor capacity is 75kW or above.
*6 Obtained when a DC reactor (DCR) is used.
*7 Average braking torque for the motor running alone. (It varies with the efficiency of the motor.)
*8 Voltage unbalance (%) =(Max. voltage (V) - Min. voltage (V))/Three -phase average voltage (V) × 67 (IEC 61800 - 3) If this value is 2 to 3%, use an optional AC reactor (ACR).
*10 HND spec. of the type 0007 and 0012: allowable ambient temperature 40 °C (+104 °F) or less.
The rated output current at HND spec. is decreased 1% for every 1 °C (1.8 °F) when ambient temperature is +40 °C (+104 °F) or more.

# Standard Model Specifications

## Three phase 400V class series

| Items | | | Specifications | | | | | | | | | | |
|---|---|---|---|---|---|---|---|---|---|---|---|---|---|
| Type | | | FRN□□□□E2S-4GB | | | | | | | | | | |
| | | | 0085 | 0105 | 0139 | 0168 | 0203 | 0240 | 0290 | 0361 | 0415 | 0520 | 0590 |
| Nominal applied motor *1 [kW(HP)] | | ND | 45(60) | 55(75) | 75(100) | 90(125) | 110(150) | 132(200) | 160 | 200(300) | 220(350) | 280(450) | 315(500) |
| | | HD | 37(50) | 45(60) | 55(75) | 75(100) | 90(125) | 110(150) | 132(200) | 160(250) | 200(300) | 220(350) | 250(400) |
| | | HND | 37(50) | 45(60) | 55(75) | 75(100) | 90(125) | 110(150) | 132(200) | 160(250) | 200(300) | 220(350) | 280(450) |
| | | HHD | 30(40) | 37(50) | 45(60) | 55(75) | 75(100) | 90(125) | 110(150) | 132(200) | 160(250) | 200(300) | 220(350) |
| Output ratings | Rated capacity [kVA] *2 | ND | 65 | 80 | 106 | 128 | 155 | 183 | 221 | 275 | 316 | 396 | 450 |
| | | HD | 57 | 69 | 85 | 114 | 134 | 160 | 193 | 232 | 287 | 316 | 364 |
| | | HND | 57 | 69 | 85 | 114 | 134 | 160 | 193 | 232 | 287 | 316 | 396 |
| | | HHD | 46 | 57 | 69 | 85 | 114 | 134 | 160 | 193 | 232 | 287 | 316 |
| | Rated voltage [V] *3 | | Three-phase 380 to 480V (With AVR) | | | | | | | | | | |
| | Rated current [A] *4 | ND | 85.0 | 105 | 139 | 168 | 203 | 240 | 290 | 361 | 415 | 520 | 590 |
| | | HD | 75.0 | 91.0 | 112 | 150 | 176 | 210 | 253 | 304 | 377 | 415 | 477 |
| | | HND | 75.0 | 91.0 | 112 | 150 | 176 | 210 | 253 | 304 | 377 | 415 | 520 |
| | | HHD | 60.0 | 75.0 | 91.0 | 112 | 150 | 176 | 210 | 253 | 304 | 377 | 415 |
| | Overload capability | ND, HND | 120% of nominal current for 1min | | | | | | | | | | |
| | | HD | 150% of nominal current for 1min | | | | | | | | | | |
| | | HHD | 150% of nominal current for 1min or 200% of nominal current for 0.5s | | | | | | | | | | |
| Input ratings | Main power supply | | Three-phase 380 to 480V, 50/60Hz | | | | Three-phase 380 to 440V, 50Hz *9<br>Three-phase 380 to 480V, 60Hz | | | | | | |
| | Voltage/frequency variations | | Voltage: +10 to -15% (Voltage unbalance:2% or less *8, Frequency: +5 to -5%) *8 | | | | | | | | | | |
| | Rated current without DCR *5 [A] | ND | 114 | 140 | - | - | - | - | - | - | - | - | - |
| | | HD | 94.3 | 114 | 140 | - | - | - | - | - | - | - | - |
| | | HND | 94.3 | 114 | 140 | - | - | - | - | - | - | - | - |
| | | HHD | 77.9 | 94.3 | 114 | 140 | - | - | - | - | - | - | - |
| | Rated current with DCR *5 [A] | ND | 83.2 | 102 | 138 | 164 | 201 | 238 | 286 | 357 | 390 | 500 | 559 |
| | | HD | 68.5 | 83.2 | 102 | 138 | 164 | 201 | 238 | 286 | 357 | 390 | 443 |
| | | HND | 68.5 | 83.2 | 102 | 138 | 164 | 201 | 238 | 286 | 357 | 390 | 500 |
| | | HHD | 57.0 | 68.5 | 83.2 | 102 | 138 | 164 | 201 | 238 | 286 | 357 | 390 |
| | Required power supply capacity *6 [kVA] | ND | 58 | 71 | 96 | 114 | 139 | 165 | 199 | 248 | 271 | 347 | 388 |
| | | HD | 47 | 58 | 71 | 96 | 114 | 140 | 165 | 199 | 248 | 271 | 307 |
| | | HND | 47 | 58 | 71 | 96 | 114 | 140 | 165 | 199 | 248 | 271 | 347 |
| | | HHD | 39 | 47 | 58 | 71 | 96 | 114 | 140 | 165 | 199 | 248 | 271 |
| Braking | Braking torque *7 [%] | ND | 5 to 9% | | | | | | | | | | |
| | | HD | 7 to 12% | | | | | | | | | | |
| | | HND | 7 to 12% | | | | | | | | | | |
| | | HHD | 10 to 15% | | | | | | | | | | |
| | DC braking | | Starting frequency: 0.0 to 60.0Hz, Braking time: 0.0 to 30.0s,<br>Braking level: 0 to 60% (ND spec.), 0 to 80% (HD/HND spec.), 0 to 100% (HHD spec.) of nominal current | | | | | | | | | | |
| | Braking chopper | | Option | | | | | | | | | | |
| | Minimum connection resistance[ohm] | | - | - | - | - | - | - | - | - | - | - | - |
| | Braking resistor | | Option | | | | | | | | | | |
| DC reactor (DCR) | | ND | Option | | | | | | | | | | |
| | | HND, HD | Option | | | | | | | | | | |
| | | HHD | Option | | | | | | | | | | |
| Enclosure (IEC60529) | | | IP00, UL open type | | | | | | | | | | |
| Cooling method | | | Fan cooling | | | | | | | | | | |
| Mass [kg] | | | 25 | 26 | 30 | 33 | 40 | 62 | 63 | 95 | 96 | 130 | 140 |

*1 Fuji 4-pole standard motor. At the selection of the inverter rating, consider not only the rating capacity(kW) is enough but also inverter output current is larger than selected the motor's nominal current.
*2 Rated capacity is calculated by assuming the output rated voltage as 440 V.
*3 Output voltage cannot exceed the power supply voltage.
*4 When the carrier frequency (F26) is set to below value or higher, the inverter is sure to be necessary to derate their nominal current.
HHD spec.---type 0002 to 0012 : 8kHz, type 0022 to 0168 : 10kHz, type 0203 to 0590 : 6kHz
HND spec.---type 0002 to 0012 : 8kHz, type 0022 to 0059 : 10kHz, type 0072 to 0168 : 6kHz, type 0203 to 0590 : 4kHz
HD,ND spec.---All type : 4kHz
The rated output current at HD/ND spec. is decreased 2% for every 1 °C (1.8 °F) when ambient temperature is +40 °C (+104 °F) or more.
*5 The value is calculated assuming that the inverter is connected with a power supply with the capacity of 500 kVA (or 10 times the inverter capacity if the inverter capacity exceeds 50 kVA) and %X is 5%. Be sure to use the DCR when applicable motor capacity is 75kW or above.
*6 Obtained when a DC reactor (DCR) is used.
*7 Average braking torque for the motor running alone. (It varies with the efficiency of the motor.)
*8 Voltage unbalance (%) =(Max. voltage (V) - Min. voltage (V))/Three -phase average voltage (V) × 67 (IEC 61800 - 3) If this value is 2 to 3%, use an optional AC reactor (ACR).
*9 The 400 V class series with type 0203 or above is equipped with a set of switching connectors (male) which should be configured according to the power source voltage and frequency.



# Standard Model Specifications

## Three phase 200V class series

| Items | | | Specifications | | | | | | | | | | | | |
|---|---|---|---|---|---|---|---|---|---|---|---|---|---|---|---|
| Type | | | FRN□□□□E2S-2GA, FRN□□□□E2S-2GB | | | | | | | FRN□□□□E2S-2GB | | | | | |
| | | | 0001 | 0002 | 0004 | 0006 | 0010 | 0012 | 0020 | 0030 | 0040 | 0056 | 0069 | 0088 | 0115 |
| Nominal applied motor *1 [kW(HP)] | | HND | 0.2(1/4) | 0.4(1/2) | 0.75(1) | 1.1(1.5) | 2.2(3) | 3.0(4)*10 | 5.5(7.5)*10 | 7.5(10) | 11(15) | 15(20) | 18.5(25) | 22(30) | 30(40) |
| | | HHD | 0.1(1/8) | 0.2(1/4) | 0.4(1/2) | 0.75(1) | 1.5(2) | 2.2(3) | 3.7(5) | 5.5(7.5) | 7.5(10) | 11(15) | 15(20) | 18.5(25) | 22(30) |
| Output ratings | Rated capacity [kVA] *2 | HND | 0.5 | 0.8 | 1.3 | 2.3 | 3.7 | 4.6*10 | 7.5*10 | 11 | 15 | 21 | 26 | 34 | 44 |
| | | HHD | 0.3 | 0.6 | 1.1 | 1.9 | 3.0 | 4.2 | 6.7 | 9.5 | 13 | 18 | 23 | 29 | 34 |
| | Rated voltage [V] *3 | | Three-phase 200 to 240V (With AVR) | | | | | | | | | | | | |
| | Rated current [A] *4 | HND | 1.3 | 2.0 | 3.5 | 6.0 | 9.6 | 12*10 | 19.6*10 | 30 | 40 | 56 | 69 | 88 | 115 |
| | | HHD | 0.8 | 1.6 | 3.0 | 5.0 | 8.0 | 11 | 17.5 | 25 | 33 | 47 | 60 | 76 | 90 |
| | Overload capability | HND | 120% of nominal current for 1min | | | | | | | | | | | | |
| | | HHD | 150% of nominal current for 1min or 200% of nominal current for 0.5s | | | | | | | | | | | | |
| Input ratings | Main power supply | | Three-phase 200 to 240V, 50/60Hz | | | | | | | | | | | | |
| | Voltage/frequency variations | | Voltage: +10 to -15% (Voltage unbalance:2% or less *8, Frequency: +5 to -5%) | | | | | | | | | | | | |
| | Rated current without DCR *5 [A] | HND | 1.8 | 2.6 | 4.9 | 6.7 | 12.8 | 17.9*10 | 31.9*10 | 42.7 | 60.7 | 80.0 | 97.0 | 112 | 151 |
| | | HHD | 1.1 | 1.8 | 3.1 | 5.3 | 9.5 | 13.2 | 22.2 | 31.5 | 42.7 | 60.7 | 80.0 | 97.0 | 112 |
| | Rated current with DCR *5 [A] | HND | 0.93 | 1.6 | 3.0 | 4.3 | 8.3 | 11.7*10 | 19.9*10 | 28.8 | 42.2 | 57.6 | 71.0 | 84.4 | 114 |
| | | HHD | 0.57 | 0.93 | 1.6 | 3.0 | 5.7 | 8.3 | 14.0 | 21.1 | 28.8 | 42.2 | 57.6 | 71.0 | 84.4 |
| | Required power supply capacity *6 [kVA] | HND | 0.4 | 0.6 | 1.1 | 1.5 | 2.9 | 4.1*10 | 6.9*10 | 10 | 15 | 20 | 25 | 30 | 40 |
| | | HHD | 0.2 | 0.4 | 0.6 | 1.1 | 2.0 | 2.9 | 4.9 | 7.3 | 10 | 15 | 20 | 25 | 30 |
| Braking | Braking torque *7 [%] | HND | 75% | | 53% | 68% | 48% | 29%*10 | 27%*10 | 15% | | | | | |
| | | HHD | 150% | | 100% | | 70% | 40% | | 20% | | | | | |
| | DC braking | | Starting frequency: 0.0 to 60.0Hz, Braking time: 0.0 to 30.0s, Braking level: 0 to 60% (ND spec.), 0 to 80% (HD/HND spec.), 0 to 100% (HHD spec.) of nominal current | | | | | | | | | | | | |
| | Braking chopper | | Built-in | | | | | | | | | | | | |
| | Minimum connection resistance[ohm] | | 100 | | | | 40 | | 33 | 20 | 15 | 10 | 8.6 | 4 | |
| | Braking resistor | | Option | | | | | | | | | | | | |
| DC reactor (DCR) | | HND | Option | | | | | | | | | | | | |
| | | HHD | Option | | | | | | | | | | | | |
| Enclosure (IEC60529) | | | IP20, UL open type | | | | | | | | | | | | |
| Cooling method | | | Naturalural cooling | | | | Fan cooling | | | | | | | | |
| Mass [kg] | | | 0.5 | 0.5 | 0.6 | 0.8 | 1.5 | 1.5 | 1.8 | 5.0 | 5.0 | 8.0 | 9.0 | 9.5 | 10 |

*1 Fuji 4-pole standard motor. At the selection of the inverter rating, consider not only the rating capacity(kW) is enough but also inverter output current is larger than selected the motor's nominal current.
*2 Rated capacity is calculated by assuming the output rated voltage as 220 V.
*3 Output voltage cannot exceed the power supply voltage.
*4 When the carrier frequency (F26) is set to below value or higher, the inverter is sure to be necessary to derate their nominal current.
HHD spec.---type 0001 to 0020 : 8kHz, type 0030 to 0115 : 10kHz,
HND spec.---type 0001 to 0020 : 4kHz, type 0030 to 0069 : 10kHz, type 0088,0115 : 4kHz
*5 The value is calculated assuming that the inverter is connected with a power supply with the capacity of 500 kVA (or 10 times the inverter capacity if the inverter capacity exceeds 50 kVA) and %X is 5%.
*6 Obtained when a DC reactor (DCR) is used.
*7 Average braking torque for the motor running alone. (It varies with the efficiency of the motor.)
*8 Voltage unbalance (%) =(Max. voltage (V) - Min. voltage (V))/Three -phase average voltage (V) × 67 (IEC 61800 - 3)
If this value is 2 to 3%, use an optional AC reactor (ACR).
*10 HND spec. of the type 0012 and 0020: allowable ambient temperature 40 °C (+104 °F) or less.
The rated output current at HND spec. is decreased 1% for every 1 °C (1.8 °F) when ambient temperature is +40 °C (+104 °F) or more.

# Standard Model Specifications

## Single phase 200V class series (Basic Type)

| Items | | | Specifications | | | | | |
|---|---|---|---|---|---|---|---|---|
| Type | | | FRN□□□□E2S-7GA, FRN□□□□E2S-7GB | | | | | |
| | | | 0001 | 0002 | 0003 | 0005 | 0008 | 0011 |
| Nominal applied motor *1 [kW(HP)] | | HHD | 0.1(1/8) | 0.2(1/4) | 0.4(1/2) | 0.75(1) | 1.5(2) | 2.2(3) |
| Output ratings | Rated capacity [kVA] *2 | HHD | 0.3 | 0.6 | 1.1 | 1.9 | 3.0 | 4.2 |
| | Rated voltage [V] *3 | | Three-phase 200 to 240V (With AVR) | | | | | |
| | Rated current [A] *4 | HHD | 0.8 | 1.6 | 3.0 | 5.0 | 8.0 | 11 |
| | Overload capability | HHD | 150% of nominal current for 1min or 200% of nominal current for 0.5s | | | | | |
| Input ratings | Main power supply | | Three-phase 200 to 240V, 50/60Hz | | | | | |
| | Voltage/frequency variations | | Voltage: +10 to -15% (Voltage unbalance:2% or less *8, Frequency: +5 to -5%) | | | | | |
| | Rated current without DCR *5 [A] | HHD | 1.8 | 3.3 | 5.4 | 9.7 | 16.4 | 24.8 |
| | Rated current with DCR *5 [A] | HHD | 1.1 | 2.0 | 3.5 | 6.4 | 11.6 | 17.5 |
| | Required power supply capacity *6 [kVA] | HHD | 0.3 | 0.4 | 0.7 | 1.3 | 2.4 | 3.5 |
| Braking | Braking torque *7 [%] | HHD | 150% | | 100% | | 70% | 40% |
| | DC braking | | Starting frequency: 0.0 to 60.0Hz, Braking time: 0.0 to 30.0s, Braking level: 0 to 100% (HHD spec.) of nominal current | | | | | |
| | Braking chopper | | Built-in | | | | | |
| | Minimum connection resistance [ohm] | | 100 | | | | 40 | |
| | Braking resistor | | Option | | | | | |
| DC reactor (DCR) | | HHD | Option | | | | | |
| Enclosure (IEC60529) | | | IP20, UL open type | | | | | |
| Cooling method | | | Naturalural cooling | | | | Fan cooling | |
| Mass [kg] | | | 0.5 | 0.5 | 0.6 | 0.9 | 1.6 | 1.8 |

*1 Fuji 4-pole standard motor. At the selection of the inverter rating, consider not only the rating capacity(kW) is enough but also inverter output current is larger than selected the motor's nominal current.
*2 Rated capacity is calculated by assuming the output rated voltage as 220 V.
*3 Output voltage cannot exceed the power supply voltage.
*4 When the carrier frequency (F26) is set to below value or higher, the inverter is sure to be necessary to derate their nominal current.
HHD spec.---type 0001 to 0011 : 8kHz
*5 The value is calculated assuming that the inverter is connected with a power supply with the capacity of 500 kVA (or 10 times the inverter capacity if the inverter capacity exceeds 50 kVA) and %X is 5%.
*6 Obtained when a DC reactor (DCR) is used.
*7 Average braking torque for the motor running alone. (It varies with the efficiency of the motor.)



# EMC Filter Built-in Type Specifications

## Three phase 400V class series

| Items | | | Specifications | | | | | | | | | | |
|---|---|---|---|---|---|---|---|---|---|---|---|---|---|
| Type | | | FRN□□□□E2E-4GA | | | | | FRN□□□□E2E-4E | | | | | |
| | | | 0002 | 0004 | 0006 | 0007 | 0012 | 0022 | 0029 | 0037 | 0044 | 0059 | 0072 |
| Nominal applied motor *1 [kW] | | ND | 0.75 | 1.5 | 2.2 | 3.0 | 5.5 | 11 | 15 | 18.5 | 22 | 30 | 37 |
| | | HD | 0.75 | 1.1 | 2.2 | 3.0 | 5.5 | 7.5 | 11 | 15 | 18.5 | 22 | 30 |
| | | HND | 0.75 | 1.1 | 2.2 | 3.0*9 | 5.5*9 | 7.5 | 11 | 15 | 18.5 | 22 | 30 |
| | | HHD | 0.4 | 0.75 | 1.5 | 2.2 | 3.7 | 5.5 | 7.5 | 11 | 15 | 18.5 | 22 |
| Output ratings | Rated capacity [kVA] *2 | ND | 1.6 | 3.1 | 4.2 | 5.3 | 9.1 | 16 | 22 | 28 | 34 | 45 | 55 |
| | | HD | 1.4 | 2.6 | 3.8 | 4.8 | 8.5 | 13 | 18 | 24 | 29 | 34 | 46 |
| | | HND | 1.4 | 2.6 | 3.8 | 4.8*9 | 8.5*9 | 13 | 18 | 24 | 29 | 34 | 46 |
| | | HHD | 1.1 | 1.9 | 3.2 | 4.2 | 6.9 | 9.9 | 14 | 18 | 23 | 30 | 34 |
| | Rated voltage [V] *3 | | Three-phase 380 to 480V (With AVR) | | | | | | | | | | |
| | Rated current [A] *4 | ND | 2.1 | 4.1 | 5.5 | 6.9 | 12 | 21.5 | 28.5 | 37.0 | 44.0 | 59.0 | 72.0 |
| | | HD | 1.8 | 3.4 | 5.0 | 6.3 | 11.1 | 17.5 | 23.0 | 31.0 | 38.0 | 45.0 | 60.0 |
| | | HND | 1.8 | 3.4 | 5.0 | 6.3*9 | 11.1*9 | 17.5 | 23.0 | 31.0 | 38.0 | 45.0 | 60.0 |
| | | HHD | 1.5 | 2.5 | 4.2 | 5.5 | 9.0 | 13.0 | 18.0 | 24.0 | 30.0 | 39.0 | 45.0 |
| | Overload capability | ND, HND | 120% of nominal current for 1min | | | | | | | | | | |
| | | HD | 150% of nominal current for 1min | | | | | | | | | | |
| | | HHD | 150% of nominal current for 1min or 200% of nominal current for 0.5s | | | | | | | | | | |
| Input ratings | Main power supply | | Three-phase 380 to 480V, 50/60Hz | | | | | | | | | | |
| | Voltage/frequency variations | | Voltage: +10 to -15% (Voltage unbalance:2% or less *8, Frequency: +5 to -5%) | | | | | | | | | | |
| | Rated current without DCR *5 [A] | ND | 2.7 | 4.8 | 7.3 | 11.3 | 16.8 | 33.0 | 43.8 | 52.3 | 60.6 | 77.9 | 94.3 |
| | | HD | 2.7 | 3.9 | 7.3 | 11.3 | 16.8 | 23.2 | 33.0 | 43.8 | 52.3 | 60.6 | 77.9 |
| | | HND | 2.7 | 3.9 | 7.3 | 11.3*9 | 16.8*9 | 23.2 | 33.0 | 43.8 | 52.3 | 60.6 | 77.9 |
| | | HHD | 1.7 | 3.1 | 5.9 | 8.2 | 13.0 | 17.3 | 23.2 | 33.0 | 43.8 | 52.3 | 60.6 |
| | Rated current with DCR *5 [A] | ND | 1.5 | 2.1 | 4.2 | 5.8 | 10.1 | 21.1 | 28.8 | 35.5 | 42.2 | 57.0 | 68.5 |
| | | HD | 1.5 | 2.1 | 4.2 | 5.8 | 10.1 | 14.4 | 21.1 | 28.8 | 35.5 | 42.2 | 57.0 |
| | | HND | 1.5 | 2.1 | 4.2 | 5.8*9 | 10.1*9 | 14.4 | 21.1 | 28.8 | 35.5 | 42.2 | 57.0 |
| | | HHD | 0.85 | 1.6 | 3.0 | 4.4 | 7.3 | 10.6 | 14.4 | 21.1 | 28.8 | 35.5 | 42.2 |
| | Required power supply capacity *6 [kVA] | ND | 1.1 | 1.5 | 3.0 | 4.1 | 7.0 | 15 | 20 | 25 | 29 | 39 | 47 |
| | | HD | 1.1 | 1.5 | 3.0 | 4.1 | 7.0 | 10 | 15 | 20 | 25 | 29 | 39 |
| | | HND | 1.1 | 1.5 | 3.0 | 4.1*9 | 7.0*9 | 10 | 15 | 20 | 25 | 29 | 39 |
| | | HHD | 0.6 | 1.2 | 2.1 | 3.1 | 5.1 | 7.3 | 10 | 15 | 20 | 25 | 29 |
| Braking | Braking torque *7 [%] | ND | 53% | 50% | 48% | 29% | 27% | 12% | | | | | |
| | | HD | 53% | 68% | 48% | 29% | 27% | 15% | | | | | |
| | | HND | 53% | 68% | 48% | 29%*9 | 27%*9 | 15% | | | | | |
| | | HHD | 100% | | 70% | 40% | | 20% | | | | | |
| | DC braking | | Starting frequency: 0.0 to 60.0Hz, Braking time: 0.0 to 30.0s, Braking level: 0 to 60% (ND spec.), 0 to 80% (HD/HND spec.), 0 to 100% (HHD spec.) of nominal current | | | | | | | | | | |
| | Braking chopper | | Built-in | | | | | | | | | | |
| | Minimum connection resistance [ohm] | | 200 | | 160 | | 130 | 80 | 60 | 40 | 34.4 | 16 | |
| | Braking resistor | | Option | | | | | | | | | | |
| EMC filter | | | Compliant with EMC Directives, Emission: Category C2. Immunity: Category C3 (2nd Env.) (EN61800-3: 2004)(Pending) | | | | | Compliant with EMC Directives, Emission: Category C3. Immunity: Category C3(2nd Env.)(EN61800-3:2004) | | | | | |
| DC reactor (DCR) | | ND | Option | | | | | | | | | | |
| | | HND, HD | Option | | | | | | | | | | |
| | | HHD | Option | | | | | | | | | | |
| Enclosure (IEC60529) | | | IP20, UL open type | | | | | | | | | | |
| Cooling method | | | Natural cooling | | Fan cooling | | | | | | | | |
| Mass [kg] | | | 1.5 | 1.8 | 2.3 | 2.3 | 2.4 | 6.5 | 6.5 | 11.2 | 11.2 | 10.5 | 11.2 |

*1 Fuji 4-pole standard motor. At the selection of the inverter rating, consider not only the rating capacity(kW) is enough but also inverter output current is larger than selected the motor's nominal current.
*2 Rated capacity is calculated by assuming the output rated voltage as 440 V.
*3 Output voltage cannot exceed the power supply voltage.
*4 When the carrier frequency (F26) is set to below value or higher, the inverter is sure to be necessary to derate their nominal current.
HHD spec.---type 0002 to 0012 : 8kHz, type 0022 to 0168 : 10kHz, type 0203 to 0590 : 6kHz
HND spec.---type 0002 to 0006 : 8kHz, type 0007 to 0012 : 4kHz, type 0022 to 0168 : 6kHz, type 0203 to 0590 : 4kHz
HD,ND spec.---All type : 4kHz
*5 The value is calculated assuming that the inverter is connected with a power supply with the capacity of 500 kVA (or 10 times the inverter capacity if the inverter capacity exceeds 50 kVA) and %X is 5%.Be sure to use the DCR when applicable motor capacity is 75kW or above.
*6 Obtained when a DC reactor (DCR) is used.
*7 Average braking torque for the motor running alone. (It varies with the efficiency of the motor.)
*8 Voltage unbalance (%) =(Max. voltage (V) - Min. voltage (V))/Three -phase average voltage (V) × 67 (IEC 61800 - 3)
If this value is 2 to 3%, use an optional AC reactor (ACR).
*9 HND spec. of the type 0007 and 0012: allowable ambient temperature 40°C (+104 °F) or less. The rated output current at HND spec. is decreased 1% for every 1 °C (1.8 °F) when ambient temperature is +40 °C (+104 °F) or more.

# EMC Filter Built-in Type Specifications

## Three phase 400V class series

| Items | | | Specifications | | | | | | | | | | |
|---|---|---|---|---|---|---|---|---|---|---|---|---|---|
| Type | | | FRN□□□□E2E-4E | | | | | | | | | | |
| | | | 0085 | 0105 | 0139 | 0168 | 0203 | 0240 | 0290 | 0361 | 0415 | 0520 | 0590 |
| Nominal applied motor *1 [kW] | | ND | 45 | 55 | 75 | 90 | 110 | 132 | 160 | 200 | 220 | 280 | 315 |
| | | HD | 37 | 45 | 55 | 75 | 90 | 110 | 132 | 160 | 200 | 220 | 250 |
| | | HND | 37 | 45 | 55 | 75 | 90 | 110 | 132 | 160 | 200 | 220 | 280 |
| | | HHD | 30 | 37 | 45 | 55 | 75 | 90 | 110 | 132 | 160 | 200 | 220 |
| Output ratings | Rated capacity [kVA] *2 | ND | 65 | 80 | 106 | 128 | 155 | 183 | 221 | 275 | 316 | 396 | 450 |
| | | HD | 57 | 69 | 85 | 114 | 134 | 160 | 193 | 232 | 287 | 316 | 364 |
| | | HND | 57 | 69 | 85 | 114 | 134 | 160 | 193 | 232 | 287 | 316 | 396 |
| | | HHD | 46 | 57 | 69 | 85 | 114 | 134 | 160 | 193 | 232 | 287 | 316 |
| | Rated voltage [V] *3 | | Three-phase 380 to 480V (With AVR) | | | | | | | | | | |
| | Rated current [A] *4 | ND | 85.0 | 105 | 139 | 168 | 203 | 240 | 290 | 361 | 415 | 520 | 590 |
| | | HD | 75.0 | 91.0 | 112 | 150 | 176 | 210 | 253 | 304 | 377 | 415 | 477 |
| | | HND | 75.0 | 91.0 | 112 | 150 | 176 | 210 | 253 | 304 | 377 | 415 | 520 |
| | | HHD | 60.0 | 75.0 | 91.0 | 112 | 150 | 176 | 210 | 253 | 304 | 377 | 415 |
| | Overload capability | ND, HND | 120% of nominal current for 1min | | | | | | | | | | |
| | | HD | 150% of nominal current for 1min | | | | | | | | | | |
| | | HHD | 150% of nominal current for 1min or 200% of nominal current for 0.5s | | | | | | | | | | |
| Input ratings | Main power supply | | Three-phase 380 to 480V, 50/60Hz | | | | Three-phase 380 to 440V, 50Hz<br>Three-phase 380 to 480V, 60Hz*9 | | | | | | |
| | Voltage/frequency variations | | Voltage: +10 to -15% (Voltage unbalance:2% or less *8, Frequency: +5 to -5%) | | | | | | | | | | |
| | Rated current without DCR *5 [A] | ND | 114 | 140 | - | - | - | - | - | - | - | - | - |
| | | HD | 94.3 | 114 | 140 | - | - | - | - | - | - | - | - |
| | | HND | 94.3 | 114 | 140 | - | - | - | - | - | - | - | - |
| | | HHD | 77.9 | 94.3 | 114 | 140 | - | - | - | - | - | - | - |
| | Rated current with DCR *5 [A] | ND | 83.2 | 102 | 138 | 164 | 201 | 238 | 286 | 357 | 390 | 500 | 559 |
| | | HD | 68.5 | 83.2 | 102 | 138 | 164 | 201 | 238 | 286 | 357 | 390 | 443 |
| | | HND | 68.5 | 83.2 | 102 | 138 | 164 | 201 | 238 | 286 | 357 | 390 | 500 |
| | | HHD | 57.0 | 68.5 | 83.2 | 102 | 138 | 164 | 201 | 238 | 286 | 357 | 390 |
| | Required power supply capacity *6 [kVA] | ND | 58 | 71 | 96 | 114 | 139 | 165 | 199 | 248 | 271 | 347 | 388 |
| | | HD | 47 | 58 | 71 | 96 | 114 | 140 | 165 | 199 | 248 | 271 | 307 |
| | | HND | 47 | 58 | 71 | 96 | 114 | 140 | 165 | 199 | 248 | 271 | 347 |
| | | HHD | 39 | 47 | 58 | 71 | 96 | 114 | 140 | 165 | 199 | 248 | 271 |
| Braking | Braking torque *7 [%] | ND | 5 to 9% | | | | | | | | | | |
| | | HD | 7 to 12% | | | | | | | | | | |
| | | HND | 7 to 12% | | | | | | | | | | |
| | | HHD | 10 to 15% | | | | | | | | | | |
| | DC braking | | Starting frequency: 0.0 to 60.0Hz, Braking time: 0.0 to 30.0s,<br>Braking level: 0 to 60% (ND spec.), 0 to 80% (HD/HND spec.), 0 to 100% (HHD spec.) of nominal current | | | | | | | | | | |
| | Braking chopper | | Option | | | | | | | | | | |
| | Minimum connection resistance[ohm] | | - | - | - | - | - | - | - | - | - | - | - |
| | Braking resistor | | Option | | | | | | | | | | |
| EMC filter *10 | | | Compliant with EMC Directives, Emission and Immunity: Category C3 (2nd Env.) (EN61800-3:2004) | | | | | | | | | | |
| DC reactor (DCR) | | ND | Option | | | | | | | | | | |
| | | HND, HD | Option | | | | | | | | | | |
| | | HHD | Option | | | | | | | | | | |
| Enclosure (IEC60529) | | | IP00, UL open type | | | | | | | | | | |
| Cooling method | | | Fan cooling | | | | | | | | | | |
| Mass [kg] | | | 26 | 27 | 31 | 33 | 40 | 62 | 63 | 95 | 96 | 130 | 140 |

*1 Fuji 4-pole standard motor. At the selection of the inverter rating, consider not only the rating capacity(kW) is enough but also inverter output current is larger than selected the motor's nominal current.
*2 Rated capacity is calculated by assuming the output rated voltage as 440 V.
*3 Output voltage cannot exceed the power supply voltage.
*4 When the carrier frequency (F26) is set to below value or higher, the inverter is sure to be necessary to derate their nominal current.
HHD spec.---type 0002 to 0012 : 8kHz, type 0022 to 0168 : 10kHz, type 0203 to 0590 : 6kHz
HND spec.---type 0002 to 0012 : 8kHz, type 0022 to 0059 : 10kHz, type 0072 to 0168 : 6kHz, type 0203 to 0590 : 4kHz
HD,ND spec.---All type : 4kHz
The rated output current at HD/ND spec. is decreased 2% for every 1 °C (1.8 °F) when ambient temperature is +40 °C (+104 °F) or more.
*5 The value is calculated assuming that the inverter is connected with a power supply with the capacity of 500 kVA (or 10 times the inverter capacity if the inverter capacity exceeds 50 kVA) and %X is 5%. Be sure to use the DCR when applicable motor capacity is 75kW or above.
*6 Obtained when a DC reactor (DCR) is used.
*7 Average braking torque for the motor running alone. (It varies with the efficiency of the motor.)
*8 Voltage unbalance (%) =(Max. voltage (V) - Min. voltage (V))/Three -phase average voltage (V) × 67 (IEC 61800 - 3) If this value is 2 to 3%, use an optional AC reactor (ACR).
*9 HND spec. of the type 0007 and 0012: allowable ambient temperature 40°C (+104 °F) or less. The rated output current at HND spec. is decreased 1% for every 1 °C (1.8 °F) when ambient temperature is +40 °C (+104 °F) or more.



# EMC Filter Built-in Type Specifications

## Three phase 200V class series

| Items | | | Specifications | | | | | | |
|---|---|---|---|---|---|---|---|---|---|
| Type | | | FRN□□□□E2E-2GA | | | | | | |
| | | | 0001 | 0002 | 0004 | 0006 | 0010 | 0012 | 0020 |
| Nominal applied motor *1 [kW] | | HND | 0.2 | 0.4 | 0.75 | 1.1*9 | 2.2 | 3.0*9 | 5.5*9 |
| | | HHD | 0.1 | 0.2 | 0.4 | 0.75 | 1.5 | 2.2 | 3.7 |
| Output ratings | Rated capacity [kVA] *2 | HND | 0.5 | 0.8 | 1.3 | 2.3*9 | 3.7 | 4.6*9 | 7.5*9 |
| | | HHD | 0.3 | 0.6 | 1.1 | 1.9 | 3.0 | 4.2 | 6.7 |
| | Rated voltage [V] *3 | | Three-phase 200 to 240V (With AVR) | | | | | | |
| | Rated current [A] *4 | HND | 1.3 | 2.0 | 3.5 | 6.0 | 9.6 | 12*9 | 19.6*9 |
| | | HHD | 0.8 | 1.6 | 3.0 | 5.0 | 8.0 | 11 | 17.5 |
| | Overload capability | HND | 120% of nominal current for 1min | | | | | | |
| | | HHD | 150% of nominal current for 1min or 200% of nominal current for 0.5s | | | | | | |
| Input ratings | Main power supply | | Three-phase 200 to 240V, 50/60Hz | | | | | | |
| | Voltage/frequency variations | | Voltage: +10 to -15% (Voltage unbalance:2% or less *8, Frequency: +5 to -5%) | | | | | | |
| | Rated current without DCR *5 [A] | HND | 1.8 | 2.6 | 4.9 | 6.7*9 | 12.8 | 17.9*9 | 28.5*9 |
| | | HHD | 1.1 | 1.8 | 3.1 | 5.3 | 9.5 | 13.2 | 22.2 |
| | Rated current with DCR *5 [A] | HND | 0.93 | 1.6 | 3.0 | 4.3*9 | 8.3 | 11.7*9 | 19.9*9 |
| | | HHD | 0.57 | 0.93 | 1.6 | 3.0 | 5.7 | 8.3 | 14.0 |
| | Required power supply capacity *6 [kVA] | HND | 0.4 | 0.6 | 1.1 | 1.5*9 | 2.9 | 4.1*9 | 6.9*9 |
| | | HHD | 0.2 | 0.4 | 0.6 | 1.1 | 2.0 | 2.9 | 4.9 |
| Braking | Braking torque *7 [%] | HND | 75% | | 53% | 68%*9 | 48% | 29%*9 | 27%*9 |
| | | HHD | 150% | | 100% | | 70% | 40% | |
| | DC braking | | Starting frequency: 0.0 to 60.0Hz, Braking time: 0.0 to 30.0s,<br>Braking level: 0 to 80% (HND spec.), 0 to 100% (HHD spec.) of nominal current | | | | | | |
| | Braking chopper | | Built-in | | | | | | |
| | Minimum connection resistance [ohm] | | 100 | | | | 40 | | 33 |
| | Braking resistor | | Option | | | | | | |
| EMC filter | | | Compliant with EMC Directives, Emission: Category C2. Immunity: Category C3 (2nd Env.) (EN61800-3: 2004) | | | | | | |
| DC reactor (DCR) | | HND | Option | | | | | | |
| | | HHD | Option | | | | | | |
| Enclosure (IEC60529) | | | IP20, UL open type | | | | | | |
| Cooling method | | | Naturalural cooling | | | | Fan cooling | | |
| Mass [kg] | | | 0.6 | 0.6 | 0.7 | 0.9 | 2.2 | 2.3 | 2.3 |

*1 Fuji 4-pole standard motor
*2 Rated capacity is calculated by assuming the output rated voltage as 220 V.
*3 Output voltage cannot exceed the power supply voltage.
*4 When the carrier frequency (F26) is set to below value or higher, the inverter is sure to be necessary to derate their nominal current.
HHD spec.---type 0001 to 0020 : 8kHz
HND spec.---type 0001 to 0020 : 4kHz
*5 The value is calculated assuming that the inverter is connected with a power supply with the capacity of 500 kVA (or 10 times the inverter capacity if the inverter capacity exceeds 50 kVA) and %X is 5%.
*6 Obtained when a DC reactor (DCR) is used.
*7 Average braking torque for the motor running alone. (It varies with the efficiency of the motor.)
*8 Voltage unbalance (%) =(Max. voltage (V) - Min. voltage (V))/Three -phase average voltage (V) × 67 (IEC 61800 - 3)
If this value is 2 to 3%, use an optional AC reactor (ACR).
*9 HND spec. of the type 0006, 0012 and 0020: allowable ambient temperature 40°C (+104 °F) or less.
The rated output current at HND spec. is decreased 1% for every 1 °C (1.8 °F) when ambient temperature is +40°C (+104 °F) or more.

# EMC Filter Built-in Type Specifications

## Single phase 200V class series

| Items | | | Specifications | | | | | |
|---|---|---|---|---|---|---|---|---|
| Type | | | FRN□□□□E2E-7GA, FRN□□□□E2E-7GB | | | | | |
| | | | 0001 | 0002 | 0003 | 0005 | 0008 | 0011 |
| Nominal applied motor *1 [kW] | | HHD | 0.1 | 0.2 | 0.4 | 0.75 | 1.5 | 2.2 |
| Output ratings | Rated capacity [kVA] *2 | HHD | 0.3 | 0.6 | 1.1 | 1.9 | 3.0 | 4.2 |
| | Rated voltage [V] *3 | | Three-phase 200 to 240V (With AVR) | | | | | |
| | Rated current [A] *4 | HHD | 0.8 | 1.6 | 3.0 | 5.0 | 8.0 | 11 |
| | Overload capability | HHD | 150% of nominal current for 1min or 200% of nominal current for 0.5s | | | | | |
| Input ratings | Main power supply | | Single-phase 200 to 240V, 50/60Hz | | | | | |
| | Voltage/frequency variations | | Voltage: +10 to -10%<br>Frequency: +5 to -5% | | | | | |
| | Rated current without DCR *5 [A] | HHD | 1.8 | 3.3 | 5.4 | 9.7 | 16.4 | 24.8 |
| | Rated current with DCR *5 [A] | HHD | 1.1 | 2.0 | 3.5 | 6.4 | 11.6 | 17.5 |
| | Required power supply capacity *6 [kVA] | HHD | 0.3 | 0.4 | 0.7 | 1.3 | 2.4 | 3.5 |
| Braking | Braking torque *7 [%] | HHD | 150% | | 100% | | 70% | 40% |
| | DC braking | | Starting frequency: 0.0 to 60.0Hz, Braking time: 0.0 to 30.0s,<br>Braking level: 0 to 100% (HHD spec.) of nominal current | | | | | |
| | Braking chopper | | Built-in | | | | | |
| | Minimum connectable resistance [ohm] | | 100 | | | | 40 | |
| | Braking resistor | | Option | | | | | |
| EMC filter | | | Compliant with EMC Directives,<br>Emission: Category C2.<br>Immunity: Category C3 (2nd Env.)<br>(EN61800-3:2004) | | | | | |
| DC reactor (DCR) | | HHD | Option | | | | | |
| Enclosure (IEC60529) | | | IP20, UL open type | | | | | |
| Cooling method | | | Naturalural cool | | | | Fan cooling | |
| Mass [kg] | | | 0.6 | 0.6 | 0.7 | 1.1 | 2.3 | 2.3 |

*1 Fuji 4-pole standard motor. At the selection of the inverter rating, consider not only the rating capacity (kW) is enough but also inverter output current is larger than selected the motor's nominal current.
*2 Rated capacity is calculated by assuming the output rated voltage as 220 V.
*3 Output voltage cannot exceed the power supply voltage.
*4 When the carrier frequency (F26) is set to below value or higher, the inverter is sure to be necessary to derate their nominal current.
HHD spec.---type 0001 to 0011 : 8kHz
*5 The value is calculated assuming that the inverter is connected with a power supply with the capacity of 500 kVA (or 10 times the inverter capacity if the inverter capacity exceeds 50 kVA) and %X is 5%.
*6 Obtained when a DC reactor (DCR) is used.
*7 Average braking torque for the motor running alone. (It varies with the efficiency of the motor.)



# Common Specifications

| | Items | Specifications | Remarks |
|---|---|---|---|
| Output | Maximum frequency | - HHD/HND/HD spec.: 25 to 500 Hz variable<br>(V/f control mode, Magnetic pole position sensorless vector control mode)<br>(Up to 200 Hz under vector control with speed sensor)<br>- ND spec.: 25 to 120 Hz variable (all control mode) | IMPG-VC |
| | Base frequency | 25 to 500 Hz variable (in conjunction with the maximum frequency) | |
| | Starting frequency | 0.1 to 60.0 Hz variable<br>(0.0 Hz under vector control with speed sensor) | IMPG-VC |
| | Carrier frequency | Three phase 400V class<br>- Type 0002 to 0059:<br>- 0.75 to 16kHz variable (HHD/HND/HD spec.)<br>- 0.75 to 10kHz variable (ND spec.)<br>- Type 0072 to 0168:<br>- 0.75 to 16kHz variable (HHD spec.)<br>- 0.75 to 10kHz variable (HND/HD spec.)<br>- 0.75 to 6kHz variable (ND spec.)<br>- Type 0203 or above type of capacity:<br>- 0.75 to 10kHz variable (HHD spec.)<br>- 0.75 to 6kHz variable (HND/HD/ND spec.)<br>Three phase 200V class<br>- Type 0030,0040,0056,0069<br>- 0.75 to 16kHz variable (HHD/HND/ spec.)<br>- Type 0012 and 0020:<br>- 0.75 to 16kHz variable (HHD spec.)<br>- 0.75 to 10kHz variable (ND spec.)<br>- Type 0115:<br>- 0.75 to 16kHz variable (HHD spec.)<br>- 0.75 to 10kHz variable (HND spec.)<br>Single phase 200V class<br>- Type 0001 to 0011<br>- 0.75 to 16kHz variable (HHD spec.)<br>Note: Carrier frequency drops automatically to protect the inverter depending on environmental temperature and output current. (This auto drop function can be canceled.) | |
| | Output frequency accuracy (Stability) | - Analog setting: ±0.2% of maximum frequency 25±10°C (77±18°F) | |
| | | - Keypad setting: ±0.01% of maximum frequency -10 to +50°C (14 to 122°F) | |
| | Frequency setting resolution | - Analog setting: 0.05% of maximum frequency | |
| | | - Keypad setting: 0.01 Hz (99.99 Hz or less), 0.1 Hz (100.0 to 500.0 Hz) | |
| | | - Link setting: 0.005% of maximum frequency or 0.01 Hz (fixed) | |
| | Speed control range | - 1 : 1500 (Minimum speed : Nominal speed, 4-pole, 1 to 1500 rpm) | IMPG-VC |
| | | - 1 : 100 (Minimum speed : Nominal speed, 4-pole, 15 to 1500 rpm) | IMPG-VF |
| | | - 1 : 10 (Minimum speed : Nominal speed, 6-pole, 180 to 1800 rpm) | PM-SVC |
| | Speed control accuracy | - Analog setting: ±0.2% of maximum frequency or below 25 ±10°C (77±18°F) | IMPG-VC |
| | | - Digital setting: ±0.01% of maximum frequency or below -10 to +50°C (14 to 122°F) | |
| | | - Analog setting: ±0.5% of base frequency or below 25 ±10°C (77±18°F) | PM-SVC |
| | | - Digital setting: ±0.5% of base frequency or below -10 to +50°C (14 to 122°F) | |
| Control | Control method | - V/f control | VF |
| | | - Speed sensor less vector control (Dynamic torque vector control) | IM-SVC(DTV) |
| | | - V/f control with slip compensation active | VF with SC |
| | | - V/f control with speed sensor (The PG option card is required.) | IMPG-VF |
| | | - V/f Control with speed sensor (+Auto Torque Boost) (The PG option card is required.) | IMPG-ATB |
| | | - Vector control with speed sensor (The PG option card is required.) | IMPG-VC |
| | | - Vector control without magnetic pole position sensor | PM-SVC |
| | Voltage/Frequency characteristic | - Possible to set output voltage at base frequency and at maximum output frequency (80 to 240 V).<br>- Possible to set output voltage at base frequency and at maximum output frequency (160 to 500 V). | |
| | | - Non-linear V/f setting (3 points): Free voltage (0 to 500 V) and frequency (0 to 500 Hz) can be set.<br>- Non-linear V/f setting (3 points): Free voltage (0 to 240 V) and frequency (0 to 500 Hz) can be set. | |
| | Torque boost | - Auto torque boost (For constant torque load)<br>- Manual torque boost: Torque boost value can be set between 0.0 and 20.0%.<br>- Select application load with the function code. (Variable torque load or constant torque load) | |
| | Starting torque | Three phase 400V class<br>- 200% or above (HHD spec.:type 0072 or below) / 150% or higher (HHD spec.:type 0085 or above) at reference frequency 0.5Hz<br>- 120% or higher at reference frequency 0.5Hz, (HND/ND spec.)<br>- 150% or higher at reference frequency 0.5Hz, (HD spec.)<br>(Base frequency 50 Hz, with activating the slip compensation and the auto torque boost mode, applied motor is Fuji 4-pole standard motor.)<br>Three phase 200V class and single phase 200V class<br>- 200% or above (HHD spec.:type 0069 or below) at reference frequency 0.5Hz<br>- 120% or higher at reference frequency 0.5Hz, (HND spec.)<br>(Base frequency 50 Hz, with activating the slip compensation and the auto torque boost mode, applied motor is Fuji 4-pole standard motor.) | |

## Common Specifications

| | Items | Specifications | Remarks |
|---|---|---|---|
| Control | Start/Stop operation | - Keypad:<br>Start and stop with RUN and STOP keys (Standard keypad)<br>Start and stop with FWD / REV and STOP keys (Option multi-functional keypad) | |
| | | - External signals (digital inputs): Forward (Reverse) rotation, stop command (capable of 3-wire operation), coast-to-stop command, external alarm, alarm reset, etc. | |
| | | - Link operation: Operation via built-in RS-485 or field bus (option) communications | |
| | | - Switching operation command: Remote/local switching, link switching | |
| | Frequency setting | - Keypad: Settable with ∧ and ∨ keys | Analog input between DC+1 to +5V is available with analog bias/gain function for input. |
| | | - External volume: Available to be set with external frequency command potentiometer. (1 to 5 kΩ 1/2 W) | |
| | | - Analog input: 0 to ±10 V DC (±5 V DC)/ 0 to ±100% (terminal [12])<br>0 to +10 V DC (+5 V DC)/ 0 to +100% (terminal [12])<br>+4 to +20 mA DC/ 0 to 100% (terminal [C1])<br>+4 to +20 mA DC/ -100 to 0 to 100% (terminal [C1])<br>0 to +20 mA DC/ 0 to 100% (terminal [C1])<br>0 to +20 mA DC/ -100 to 0 to 100% (terminal [C1])<br>0 to +10 V DC (+5 V DC)/ 0 to +100% (terminal [V2])<br>0 to +10 V DC (+5 V DC)/ -100 to 0 to +100% (terminal [V2]) | |
| | | - UP/DOWN operation: Frequency can be increased or decreased while the digital input signal is ON. | |
| | | - Multi-step frequency: Selectable from 16 different frequencies (step 0 to 15) | |
| | | - Pattern Operation Mode: Automatically run in accordance with the previously configured running time,rotation direction, acceleration/deceleration and reference frequency. Maximum allowable settings are 7 stages. | |
| | | - Link operation: Can be specified via built-in RS-485 or built-in CANOpen communicatons. (Standard)<br>Can be specified via bus communicatons. (Option) | |
| | | - Switching frequency setting source: Two of frequency settings source can be switched with an external signal(digital input).<br>Remote/local switching,<br>Link switching | |
| | | - Auxiliary frequency setting: Inputs at terminals [12], [C1] or [V2] can be added to the main setting as auxiliary frequency settings. | |
| | | - Operation at a specified ratio: The ratio can be set by analog input signal. DC0-10V/0(4)-20mA /0-200%(variable) | |
| | | Inverse operation : Switchable from "0 to +10 VDC/0 to 100%" to "+10 to 0 VDC/0 to 100%"<br>by external command. (terminals [12]/[V2])<br>: Switchable from "0 to -10 VDC/0 to -100%" to "-10 to 0 VDC/0 to -100%"<br>by external command.(terminal [12])<br>: Switchable from "4 to +20 mA DC/0 to 100%" to "+20 to 4 mA DC/0 to 100%"<br>by external command.(terminal [C1])<br>: Switchable from "0 to +20 mA DC/0 to 100%" to "+20 to 4 mA DC/0 to 100%"<br>by external command.(terminal [C1]) | |
| | | - Pulse train input (standard):<br>Pulse input = Terminal [X5], Rotational direction = Another input terminal except [X5].<br>Complementary output: Max. 100 kHz, Open collector output: Max. 30 kHz | |
| | | - Pulse train input (option):The PG option card is required.<br>CW/CCW pulse, pulse + rotational direction<br>Complementary output: Max. 100 kHz, Open collector output: Max. 30 kHz | |
| | Acceleration/ Deceleration time | - Setting range: From 0.00 to 6000 s<br>- Switching: The four types of acceleration/deceleration time can be set or selected individually (switchable during operation).<br>- Acceleration/deceleration pattern: Linear acceleration/deceleration, S-shape acceleration/deceleration (weak, free (set by function codes)), curvilinear acceleration/deceleration<br>- Deceleration mode (coast-to-stop):Shut-off of the run command makes the motor coast to a stop.<br>- ACC./DEC. time for "Jogging operation" can be set. (0.00 to 6000s)<br>- Deceleration time for forcible stop: Deceleration stop by the forcible stop (STOP).<br>S-curve will be canceled during "Force to Stop". | |
| | Frequency limiter (Upper limit and lower limit frequencies) | - Specifies the upper and lower limits in Hz.<br>- Selectable for the operation performed when the reference frequency drops below the lower limit specified by related function code. | |
| | Bias for frequency/ PID command | - Bias of set frequency and PID command can be independently set(setting range: 0 to ±100%). | |
| | Analog input | - Gain : Set in the range from 0 to 200%<br>- Off-set : Set in the range from -5.0 to +5.0%<br>- Filter : Set in the range from 0.00s to 5.00 s<br>- Polarity : Select from ± or + | |
| | Jump frequency | - Three operation points and their common jump width (0.0 to 30.0 Hz) can be set. | |
| | Timer operation | - Operate and stop by the time set with keypad. (1 cycle operation) | |
| | Jogging operation | - Operation with RUN key (standard keypad), FWD or REV key (multi-functional keypad), or digital contact input FWD or REV.(Exclusive acceleration/deceleration time setting, exclusive frequency setting) | |



# Common Specifications

| | Items | Specifications | Remarks |
|---|---|---|---|
| Control | Auto-restart after momentary power failure | | |
| | (Trip at power failure) | The inverter trips immediately after power failure. | |
| | (Trip at power recovery) | Coast-to-stop at power failure and trip at power recovery | |
| | (Deceleration stop) | Deceleration stop at power failure, and trip after stoppage | |
| | (Continue to run) | Operation is continued using the load inertia energy. | |
| | (Start at the frequency selected before momentary power failure) | Coast-to-stop at power failure and start after power recovery at the frequency selected before momentary stop. | |
| | (Start at starting frequency) | Coast-to-stop at power failure and start at the starting frequency after power recovery. | |
| | (Start at the searched frequency) | Coast-to-stop at power failure and start at the serched frequency after power recovery. | |
| | Hardware current limiter | - Limits the current by hardware to prevent an overcurrent trip caused by fast load variation or momentary power failure, which cannot be covered by the software current limiter. This limiter can be canceled. | |
| | Software current limiter | - Automatically reduces the frequency so that the output current becomes lower than the preset operation level. | |
| | Operation by commercial power supply | - With commercial power selection command, the inverter outputs 50/60 Hz (SW50,SW60). | |
| | Slip compensation | - Compensates the motor slip in order to keep their speed at the reference one regardless of their load torque.<br>- Adjustable compensation time constant is possible. | |
| | Droop control | - In a machine driven with multi-motor system, this function adjusts the speed of each motor individually to balance their load torque. | |
| | Torque limiter | Control output torque or torque current so that output torque or torque current are preset limiting value or less. (The torque current limit is only available in IMPG-VC or PM-SVC mode.)<br>- Switchable between 1st and 2nd torque limit values. | |
| | Torque current limiter | - "Torque limit" and "Torque current limit" are selectable.<br>- "Torque limit" or "Torque current limit" by analog input. | IMPG-VC<br>PM-SVC |
| | Overload stopping | - When detected torque or current exceed the preset value, inverter will decelerate and stop or will coast to stop a motor. | |
| | PID Control | - PID processor for process control/dancer control<br>- Normal operation/inverse operation<br>- PID command: Keypad, analog input (from terminals [12], [C1] and [V2]), Multi-step setting(Selectable from 3 points), RS-485 communication<br>- PID feedback value (from terminals [12], [C1] and [V2])<br>- Alarm output (absolute value alarm, deviation alarm)<br>- Low liquid level stop function<br>- Anti-reset wind-up function<br>- PID output limiter<br>- Integration reset/hold | |
| | Auto-reset | - The auto-reset function that makes the inverter automatically attempt to reset the tripped state and restart without issuing an alarm output (for any alarm) even if any protective function subject to reset is activated.<br>- The allowable maximum number of reset times for the inverter to automatically attempt to escape the tripped state is 20. | |
| | Auto search for idling motor speed | - The inverter automatically searches for the idling motor speed to start to drive without stopping. (Motor constants must be needed tuning: Auto-tuning (offline)) | |
| | Automatic deceleration | - If the DC link bus voltage or calculated torque exceeds the automatic deceleration level during deceleration, the inverter automatically prolongs the deceleration time to avoid overvoltage trip. (It is possible to select forcible deceleration actuated when the deceleration time becomes three times longer.)<br>- If the calculated torque exceeds automatic deceleration level during constant speed operation, the inverter avoids overvoltage trip by increasing the frequency. | |
| | Deceleration characteristic (improved braking capacity) | - The motor loss is increased during deceleration to reduce the regenerative energy in the inverter to avoid overvoltage trip. | |
| | Auto energy saving operation | - The output voltage is controlled to minimize the total power loss of the motor and the inverter at a constant speed. | |
| | Overload prevention control | - If the ambient temperature or internal IGBT junction temperature is almost near the overheat level due to overload, the inverter drops its output frequency automatically in order to escape overload situation. | |
| | Battery/UPS operation | Cancels the undervoltage protection so that the inverter under an undervoltage condition runs the motor with battery/UPS power. | |
| | Auto-tuning (off-line) | - Measures the motor parameters while the motor is stopped or running, for setting up motor parameters.<br>- Tuning mode to only identify %R1 and %X.<br>- Tuning mode to identify the parameters for PM motor. | |
| | Auto-tuning (on-line) | - Automatically adjusts motor parameters while the motor is driving in order to prevent the motor speed fluctuation caused by the temperature rise of the motor. | |
| | Cooling fan ON/OFF control | - Detects inverter internal temperature and stops cooling fan when the temperature is low.<br>- the fan control signal can be output to an external device. | |
| | 1st to 2nd motor settings | - Switchable among the two motors.<br>It is possible to set the base frequency, rated current, torque boost, and electronic thermal slip compensation as the data for 1st to 2nd motors. | |

## Common Specifications

| | Items | Specifications | Remarks |
|---|---|---|---|
| Control | Universal DI | The status of external digital signal connected with the universal digital input terminal is transferred to the host controller. | |
| | Universal DO | Digital command signal from the host controller is output to the universal digital output terminal. | |
| | Universal AO | The analog command signal from the host controller is output to the analog output terminal. | |
| | Speed control | - Notch filter for vibration control (For IMPG-VC)<br>- Selectable among the four set of the auto speed regulator (ASR) parameters.<br>(The PG option card is required.) | IMPG-VC<br>PM-SVC |
| | Line speed control | In a machine such as winder/unwinder, regulates the motor speed to keep the peripheral speed of the roll constant.<br>(The PG option card is required.) | IMPG-VF |
| | Positioning control with pulse counter | The positioning control starts from the preset start point and counts the feedback pulses from PG inside the inverter. The motor can be automatically started decelerating to the cleep speed which can be detected the target position so that the motor can stop near the position.(The PG option card is required.) | Excluded<br>IMPG-VC<br>PM-SVC |
| | Master-follower operation | Enables synchronous operation of two motors equipped with a pulse generator(PG).(The PG option card is required.) | |
| | Pre-excitation | Excitation is carried out to create the motor flux before starting the motor.(The PG option card is required.) | IMPG-VC |
| | Zero speed control | The motor speed is held to zero by forcibly zeroing the speed command.(The PG option card is required.) | IMPG-VC |
| | Servo lock | Stops the motor and holds the motor in the stopped position.(The PG option card is required.) | IMPG-VC |
| | DC braking | When the run command turns OFF and the motor speed fall below the preset DC braking starting speed, the inverter starts to inject DC current into the motor in order to stop the motor.<br>When the run command turns ON,the inverter starts to inject DC current into the motor in order to pre-excite. | |
| | Mechanical brake control | - The inverter can output the signal which ON/OFF timing adjusted so that the mechanical brake can be turned in conjunction with detected current, torque, frequency, and release/apply delay timers.<br>- Mechanical brake interlock input | Excluded<br>PM-SVC |
| | Torque control | - Analog torque/torque current command input<br>- Speed limit function is provided to prevent the motor from becoming out of control.<br>- Torque bias (analog setting, digital setting)<br>(The PG option card is required.) | IMPG-VC |
| | Rotational direction control | - Select either of reverse or forward rotation prevention. | |
| | Customizable logic interface | The digital logic circuits and an analog arithmetic circuits can be chosen and connected with digital/analog input/output signals.<br>The simple relay sequence which the customers demands can be constituted and made to calculate.<br>- Logic circuit<br>(Digital) AND, OR, XOR, flip-flops, rising/falling edge detection,counters, etc.<br>(Analog) Addition, subtraction, multiplication, division, limitter, absolute value, sign inversion addition, comparison, highest selection, lowest selection, average value, measure conversion.<br>- Multifunctional timer<br>On-delay, off-delay, pulse train, etc.<br>Setting range: 0.0 to 600 s<br>- Input/output signal<br>terminal input / output, inverter control function<br>- Others<br>The 200 steps are available. Each step has 2 inputs and 1 output. | |
| | Applicable functions for<br>- Wire drawing machine<br>- Hoist<br>- Spinning machine (Traverse) | The specific functions which is suitable for each application field are realized by customizable logics. | |
| Indicate | Display | Detachable with 7 segments LEDs (4 digits) , 7 keys(PRG/RESET,FUNC/DATA,UP,DOWN, RUN,STOP,SHIFT) and 6LED indicator (KEYPAD CONTROL,Hz,A,kW,×10,RUN) | |
| | Running/Stopping | Speed monitor (reference frequency, output frequency, motor speed, load shaft speed, line speed, and speed indication with percent), Output current in RMS[A], Output voltage in RMS[V], Calculated torque [%], Input power [kW], PID command value, PID feedback value, PID output, Timer (Timer operation)[s], Load factor [%], Motor output [kW]<br>Torque current [%] , Magnetic flux command [%], Analog input[%], Input watt hour [kWh]<br>Constant feeding rate time (set value) (min), Constant feeding rate time (running) (s) | |
| | Life early warning | - The life early warning of the main circuit capacitors, capacitors on the PCBs and the cooling fan can be displayed.<br>- An external output is issued in a transistor output signal.<br>- Outputs the warning when the maintenance time or the number of start times has exceeded the preset. | |
| | | - Ambient temperature: 40°C(104°F)<br>- Load factor: Inverter rated current 100%(HHD spec.), 80%(HND/HD/ND spec.) | |



# Common Specifications

<table>
<tr><th colspan="2">Items</th><th>Specifications</th><th>Remarks</th></tr>
<tr><td rowspan="6">Indicate</td><td>Maintenance monitor</td><td>- Displays DC link bus voltage, Max. Output current in RMS, Input watt-hour, Input watt-hour data, Temperature (inside the inverter and heat sink, Maximum value of each one), Capacitance of the DC link bus capacitor, Lifetime of DC link bus capacitor (elapsed hours and remaining hours), Cumulative run time of power-ON time counter of the inverter, electrolytic capacitors on the printed circuit boards, cooling fan and each motor, Remaining time before the next motor maintenance, Remaining startup times before the next maintenance, Number of startups (of each motor), Light alarm factors (Latest to 3rd last), Contents and numbers of RS-485 communications errors, Option error factors , Number of option errors ,ROM version of Inverter, Keypad and Option port.</td><td></td></tr>
<tr><td>I/O checking</td><td>Shows the status of the terminal Digital input/output, Relay out, Analog input/output.</td><td></td></tr>
<tr><td>Locked by password</td><td>Limits to change or display in function code .</td><td></td></tr>
<tr><td>Trip mode</td><td>Displays the cause of trip by codes.</td><td></td></tr>
<tr><td>Light-alarm</td><td>Shows the light-alarm display L-AL.</td><td></td></tr>
<tr><td>Running or trip mode</td><td>- Trip history: Saves and displays the cause of the last four trips (with a code).<br>- Saves and displays the detailed operation status data of the last four trips.</td><td></td></tr>
<tr><td rowspan="5">Operating environment</td><td>Installation location</td><td>Indoors</td><td></td></tr>
<tr><td>Ambient</td><td>Standard (Open Type)<br>-10 to +50°C (HHD/HND spec.)<br>-10 to +40°C (HD/ND spec.)<br>NEMA/UL Type 1<br>-10 to +40°C (HHD/HND spec.)<br>-10 to +30°C (HD/ND spec.)</td><td></td></tr>
<tr><td>Ambient humidity</td><td>5 to 95%RH (without condensation)</td><td></td></tr>
<tr><td>Atmosphere</td><td>Shall be free from corrosive gases, flammable gases, oil mist, dusts, vapor, water drops and direct sunlight. (Pollution degree 2 (IEC60664-1))<br>The atmosphere must contain only a low level of salt. (0.01 mg/cm2 or less per year)</td><td></td></tr>
<tr><td>Altitude</td><td>1000m or lower<br>If the inverter is used in an altitude above 1000 m, you should apply an output current derating factor as listed in below table.
<table>
<tr><th>Altitude</th><th>Output current derating factor</th></tr>
<tr><td>1000m or lower</td><td>1.00</td></tr>
<tr><td>1000 to 1500m</td><td>0.97</td></tr>
<tr><td>1500 to 2000m</td><td>0.95</td></tr>
<tr><td>2000 to 2500m</td><td>0.91</td></tr>
<tr><td>2500 to 3000m</td><td>0.88</td></tr>
</table></td><td></td></tr>
<tr><td>Vibration</td><td>
<table>
<tr><td>Three phase 400V class series</td><td>TYPE:0203 or below</td><td>TYPE:0240 or above</td></tr>
<tr><td>2 to less than 9Hz</td><td>3mm:(Max. amplitude)</td><td>3mm:(Max. amplitude)</td></tr>
<tr><td>9 to less than 20Hz</td><td>9.8m/s²</td><td>2m/s²</td></tr>
<tr><td>20 to less than 55Hz</td><td>2m/s²</td><td>2m/s²</td></tr>
<tr><td>55 to less than 200Hz</td><td>1m/s²</td><td>1m/s²</td></tr>
</table>
<table>
<tr><td>Three phase 200V class series</td><td>TYPE:0069 or below</td></tr>
<tr><td>2 to less than 9Hz</td><td>3mm:(Max. amplitude)</td></tr>
<tr><td>9 to less than 20Hz</td><td>9.8m/s²</td></tr>
<tr><td>20 to less than 55Hz</td><td>2m/s²</td></tr>
<tr><td>55 to less than 200Hz</td><td>1m/s²</td></tr>
</table></td><td></td></tr>
<tr><td rowspan="4">Storage environment</td><td rowspan="2">Temperature</td><td>-25 to +70°C (in transport)</td><td rowspan="3">Avoid such places where the inverter will be subjected to sudden changes in temperature that will cause condensation to form.</td><td rowspan="3"></td></tr>
<tr><td>-25 to +65°C (in storage)</td></tr>
<tr><td>Relative humidity</td><td>5 to 95%RH</td></tr>
<tr><td>Atmosphere</td><td colspan="2">The inverter must not be exposed to dust, direct sunlight, corrosive or flammable gases, oil mist, vapor, water drops or vibration. The atmosphere must contain only a low level of salt. (0.01 mg/cm² or less per year)</td><td></td></tr>
<tr><td rowspan="2">Atmospheric pressure</td><td colspan="2">86 to 106kPa (during storage)</td><td></td></tr>
<tr><td colspan="2">70 to 106kPa (during transportation)</td><td></td></tr>
</table>

*Note : The meaning of the described abbreviations are shown as follows.

| | |
|---|---|
| VF | V/f control |
| IM-SVC(DTV) | Speed sensorless vector control (Dynamictorquevector control) |
| VF with SC | V/f control with slip compensation |
| IMPG-VF | V/f control with speed sensor (The PG option card is required.) |
| IMPG-ATB | V/f control with speed sensor (+Auto Torque Boost)(The PG option card is required.) |
| IMPG-VC | Vector control with speed sensor (The PG option card is required.) |
| PM-SVC | Magnetic pole position sensorless vector control |

# Basic Wiring Diagram

## With built-in CAN communication port and Single analog output

**FRN□□□□E2■-○E**
**GA**

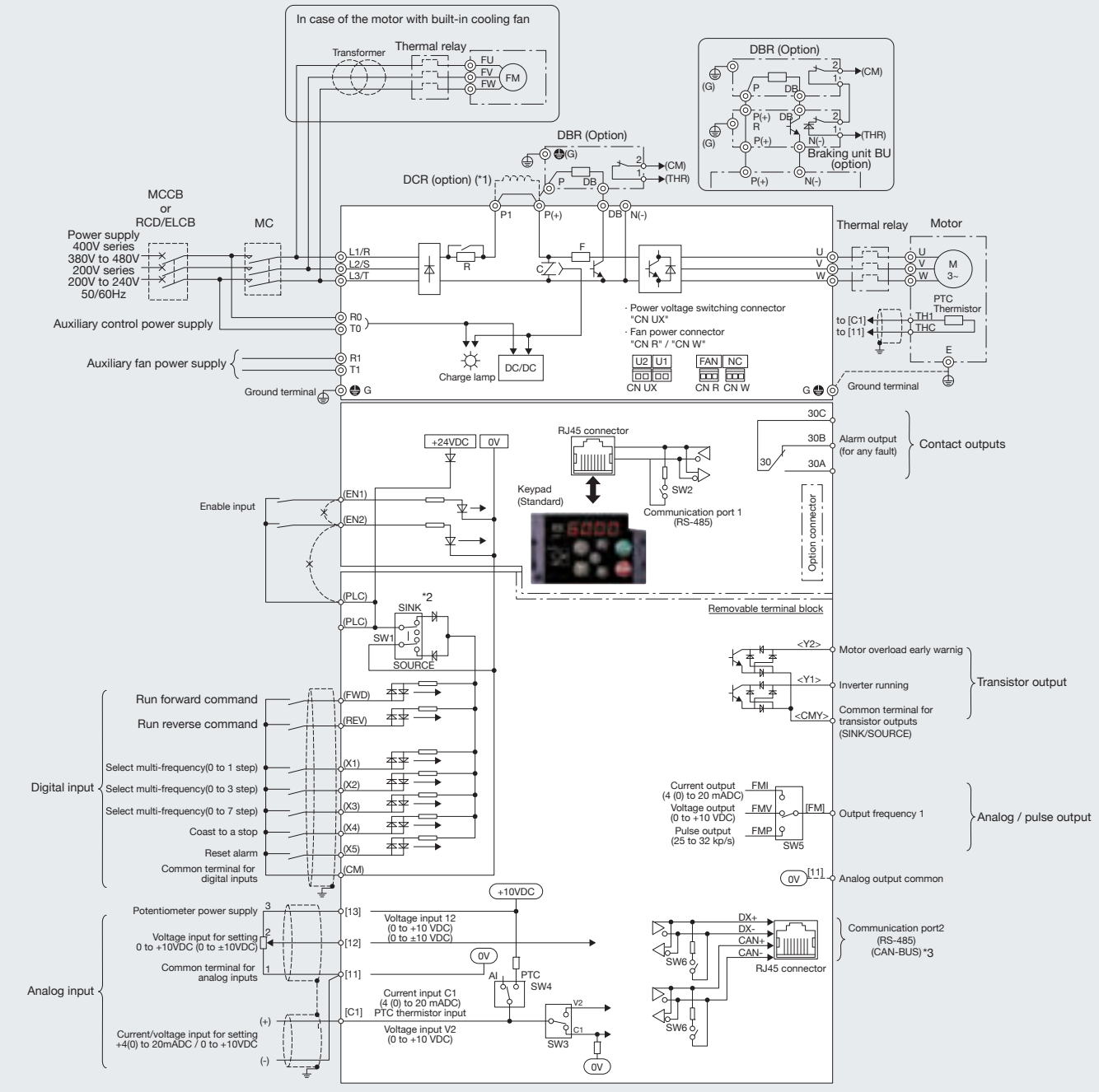


DBR: Dynamic Braking Resister
DCR: DC reactor
RCD: Residual-current-operated protective device
ELCB: Earth leakage circuit breaker
MC: Magnetic contactor
MCCB: Molded case circuit braker

*1 When connecting an optional DC reactor (DCR), remove the jumper bar from the terminals P1 and P(+).
The type 0139 (ND spec), 0168 (HD spec.) and higher types than 0203 are sure to connect the DCR (400V only).
Use a DCR when the capacity of the power supply transformer exceeds 500 kVA and is 10 times or more the inverter rated capacity, or when there are thyristor-driven loads in the same power supply line.
*2 The default setting is “Source logic” for EU model.
*3 America model is none conect

**NOTE**

This wiring diagram is to be used as a reference only when using standard terminal block model.
When wiring your inverter and/or before applying power, please always follow the connection diagrams and the relevant information written in the User's Manual.



# Basic Wiring Diagram

## Without built-in CAN communication port and with dual Analog outputs

**FRN□□□□E2S-○GB**

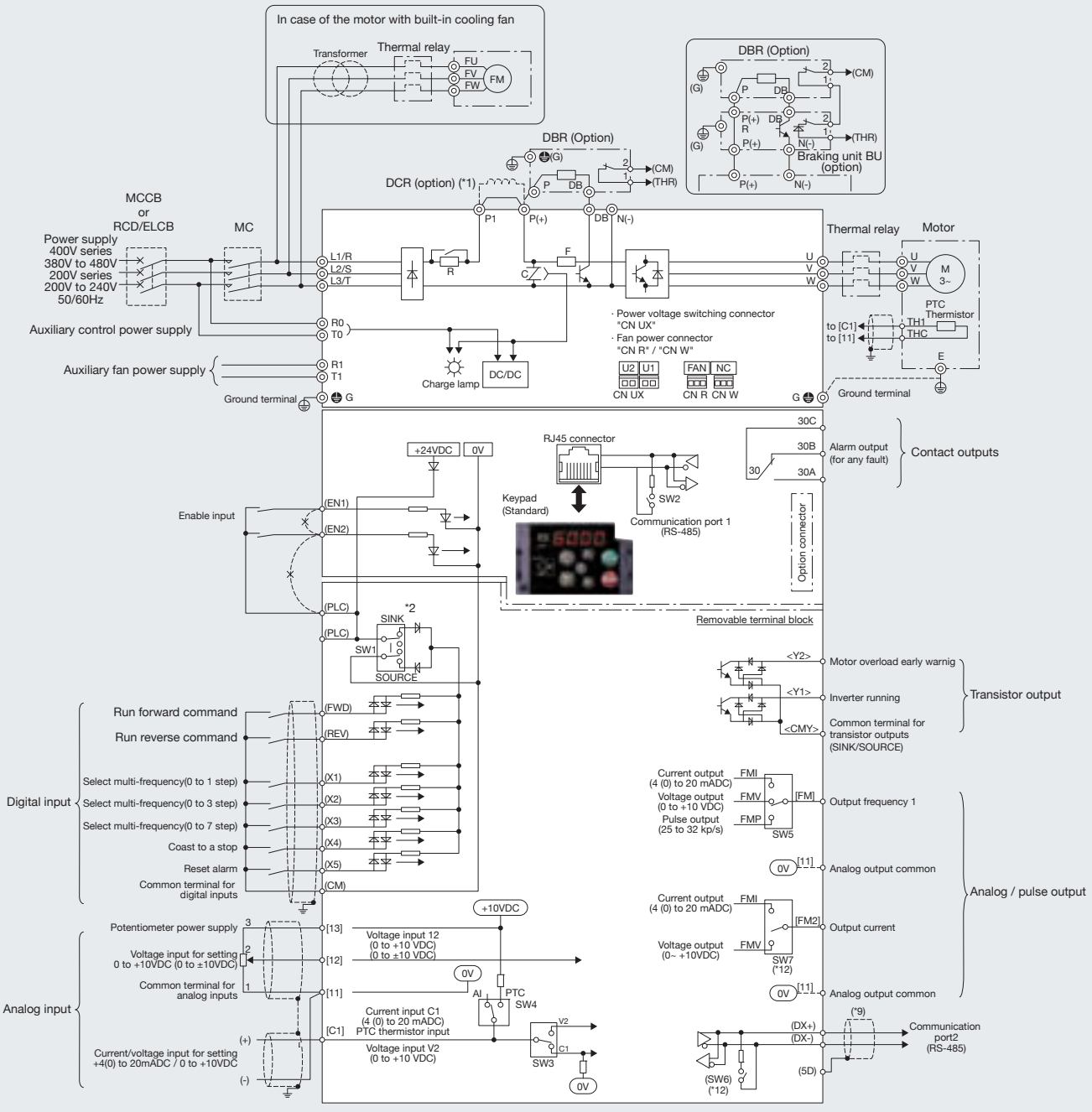


DBR: Dynamic Braking Resister
DCR: DC reactor
RCD: Residual-current-operated protective device
ELCB: Earth leakage circuit breaker
MC: Magnetic contactor
MCCB: Molded case circuit braker

*1 When connecting an optional DC reactor (DCR), remove the jumper bar from the terminals P1 and P(+). Use a DCR when the capacity of the power supply transformer exceeds 500 kVA and is 10 times or more the inverter rated capacity, or when there are thyristor-driven loads in the same power supply line.

**NOTE**

This wiring diagram is to be used as a reference only when using standard terminal block model. When wiring your inverter and/or before applying power, please always follow the connection diagrams and the relevant information written in the User's Manual.

# Terminal Functions

| Categoly | Symbol | | Name | Functions | Remarks |
|---|---|---|---|---|---|
| Main circuit | L1/R, L2/S,L3/T | | Main circuit power inputs | Connect the three-phase input power lines. | |
| | L1/L, L2/N | | | Connect the single-phase input power lines. | |
| | R0, T0 | | Auxiliary power input for the control circuit | For a backup of the control circuit power supply, connect AC power lines same as that of the main power input. | Type 0059 or above (400V only) |
| | R1, T1 | | Auxiliary power input for the cooling fans | Normally, no need to use these terminals.Use these terminals for an auxiliary power input of the fans in a power system using a power regenerative PWM converter. | Type 0203 or above (400V only) |
| | U, V, W | | Inverter outputs | Connect a three-phase motor. | |
| | P(+), P1 | | For DC REACTOR connection | Connects a DC REACTOR | |
| | P(+), N(-) | | For BRAKING UNIT connection/For DC bus | Connects a braking resistor via the braking unit. Used for a DC bus connection system. | |
| | P(+), DB | | Braking resistor | Connect an external braking resistor (option). | Type 0072 or below (400V series)<br>Type 0069 or below (200V series) |
| | ⏚G | | Grounding for inverter | Grounding terminals for the inverter. | |
| Analog inputs | [13] | | Power supply for the potentiometer | Power supply (+10 VDC) for frequency command potentiometer (Variable resistor : 1 to 5 kΩ is applicable).<br>The potentiometer of 1/2 W rating or more should be connected. | Maximum supply rating : 10 VDC, 10 mADC. |
| | [12] | | Analog setting voltage input | - External input voltage to be used as a below command. | Input impedance : 22 kΩ<br>Maximum input level : ±15 VDC<br>Input level is limited among -10 to 10 VDC regardless of excessive input of ±10 VDC.<br><br>Gain : 0 to 200%<br>Offset : 0 to ±5%<br>Bias : ±100%<br>Filter : 0.00 to 5.00s |
| | | | <Normal operation> | 0 to +10 VDC / 0 to 100% (0 to +5 VDC / 0 to 100%)<br>0 to ±10 VDC / 0 to ±100% (0 to ±5 VDC / 0 to ±100%) | |
| | | | <Inverse operation> | +10 to 0 to -10VDC / -100% to 0 to 100%<br>-10V to 0 to +10VDC / +100% to 0 to -100% | |
| | | | (Main frequency setting) | -Use as the main frequency command set point. | |
| | | | (PID control) | -Use as PID command value or PID feedback signal. | |
| | | | (Auxiliary frequency setting1,2) | -Use as additional auxiliary setting to various frequency setting. | |
| | | | (Analog input monitor) | -By inputting analog signals from various sensors such as the temperature sensors in air conditioners to the inverter, you can monitor the state of external devices via the communications link. By using an appropriate display coefficient, you can also have various values to be converted into physical quantities such as temperature and pressure before they are displayed. | |
| | | | (Gain setting) | -Use as gain for the frequency command.<br>-0% to 200% for 0 to 10 VDC | |
| | | | (Torque limit value) | -Use as analog torque limit value | |
| | | | (Torque command/Torque current command) | -Used as analog torque command value / Torque current command value. (The PG option card is required.) | |
| | | | (Torque bias amount) | -Used as analog torque bias command value.(The PG option card is required.) | |
| | | | (Speed limit value) | -Used as analog speed limit value of FWD/REV.(The PG option card is required.) | |
| | [C1] | (C1) | Analog setting voltage input | - External input voltage to be used as a below command. | Input impedance: 250Ω<br>Maximum input 30 mADC<br>Input level is limited up to 20 mADC regardless of excessive input of 20 mADC.<br><br>Gain: 0 to 200%<br>Offset: 0 to ±5%<br>Bias: ±100%<br>Filter: 0.00 to 5.00s |
| | | | <Normal operation> | 4 to 20 mADC / 0 to 100%/ -100% to 0 to 100% (*1)<br>0 to 20 mADC / 0 to 100%/ -100% to 0 to 100% (*1) | |
| | | | <Inverse operation> | 20 to 4 mADC / 0 to 100%/ -100% to 0 to 100% (*1)<br>20 to 0 mADC / 0 to 100%/ -100% to 0 to 100% (*1) | |
| | | | (Main frequency setting) | -Use as the main frequency command set point. | |
| | | | (PID control) | -Use as PID command value or PID feedback signal. | |
| | | | (Auxiliary frequency setting1,2) | -Use as additional auxiliary setting to various frequency setting. | |
| | | | (Analog input monitor) | -By inputting analog signals from various sensors such as the temperature sensors in air conditioners to the inverter, you can monitor the state of external devices via the communications link. By using an appropriate display coefficient, you can also have various values to be converted into physical quantities such as temperature and pressure before they are displayed. | |
| | | | (Gain setting) | -Use as gain for the frequency command.<br>-0 to 200% for 4(0) to 20mADC | |
| | | | (Torque limit value) | -Use as analog torque limit value | |
| | | | (Torque command/Torque current command) | -Used as analog torque command value / Torque current command value. (The PG option card is required.) | |
| | | | (Torque bias amount) | -Used as analog torque bias command value.(The PG option card is required.) | |
| | | | (Speed limit value) | -Used as analog speed limit value of FWD/REV.(The PG option card is required.) | |
| | | (V2) | Analog setting voltage input | - External input voltage to be used as a below command. | Input impedance: 22kΩ<br>Maximum input ±15 VDC<br>Input level is limited among -10 to 10 VDC regardless of excessive input of ±10 VDC.<br><br>Gain: 0 to 200%<br>Offset: 0 to ±5%<br>Bias: ±100%<br>Filter: 0.00 to 5.00s |
| | | | <Normal operation> | 0 to +10 VDC/ 0 to 100% /-100 to 0 to 100% (0 to +5 VDC / 0 to 100%)<br>0 to +10 VDC/ 0 to ±100% /-100 to 0 to 100%(*1) (0 to ±5 VDC / 0 to ±100%) | |
| | | | <Inverse operation> | +10 to 0VDC/0 to 100%/-100% to 0 to 100%<br>+10 to 0 VDC / 0 to ±100% /-100 to 0 to 100%(*1) (+5 to 0 VDC/ 0 to ±100%) | |
| | | | (Main frequency setting) | -Use as the main frequency command set point. | |
| | | | (PID control) | -Use as PID command value or PID feedback signal. | |
| | | | (Auxiliary frequency setting1,2) | -Use as additional auxiliary setting to various frequency setting. | |
| | | | (Analog input monitor) | -By inputting analog signals from various sensors such as the temperature sensors in air conditioners to the inverter, you can monitor the state of external devices via the communications link. By using an appropriate display coefficient, you can also have various values to be converted into physical quantities such as temperature and pressure before they are displayed. | |
| | | | (Gain setting) | -Use as gain for the frequency command.<br>-0 to 200% for 0 to 10 VDC | |
| | | | (Torque limit value) | -Used as analog torque limit value | |
| | | | (Torque command/Torque current command) | -Used as analog torque command value / Torque current command value (The PG option card is required.) | |
| | | | (Torque bias amount) | -Used as analog torque bias command value.(The PG option card is required.) | |
| | | | (Speed limit value) | -Used as analog speed limit value of FWD/REV.(The PG option card is required.) | |
| | | (PTC) | (PTC thermistor) | -PTC thermistor connection to protect the motor overheat. | |
| | [11] | | Analog common | Common terminals for analog input signals [12], [13], [C1], and analog output signals [FM]. | This terminal is electrically isolated from terminal [CM], [CMY]. |



# Terminal Functions

| Categoly | Symbol | Name | Functions | Remarks |
|---|---|---|---|---|
| Analog outputs | [FM]<br>[FM2]*2 | Analog monitor | The output can be either analog DC voltage (0 to 10 VDC), analog DC current (4(0) to 20 mADC) or pulse train (25 to 32000 p/s).<br>Any one item can be selected from the following items. | Gain: 0 to 300% |
| | | <Voltage output>(*3) | 0 to +10 VDC / 0 to 100% (0 to +5 VDC / 0 to 100%)<br><br>Input impedance of the external device: Min. 5kΩ (at 0 to 10 VDC output)<br>(While the terminal is outputting 0 to 10 VDC, it is capable of driving up to two analog voltmeters with 10 kΩ impedance.) | |
| | | <Current output>(*3) | 4 to 20 mADC / 0 to 100%<br>0 to 20 mADC / 0 to 100%<br>Input impedance of the external device: Max. 500Ω (at 4(0) to 20 mA DC output) | |
| | | Pulse monitor(*3) | Output form<br>Pulse output: 25 to 32000 p/s at full scale,<br>Pulse duty: approx. 50% | |
| | | Monitor data | •Output frequency1 (Before slip compensation)<br>•Output frequency2 (After slip compensation)<br>•Output current •Output voltage •Output torque<br>•Load factor •Input power •PID feedback amount (PV)<br>•Actual speed / Estimated speed •DC link bus voltage •Universal AO<br>•Motor output •Analog output calibration •PID command (SV)<br>•PID output (MV) •Position deviation in synchronous operation(The PG option card is required.)<br>•Customizable logic output 1 to 10 •Inverter cooling fin temperature<br>•PG feedback value (The PG option card is required.) | |
| Digital inputs | [CM] | Digital Common | Common terminals for the digital input signals. | |
| | [X1] | Digital input 1 | •Select multi-frequency (0 to 1 steps) •Select multi-frequency (0 to 3 steps)<br>•Select multi-frequency (0 to 7 steps) •Select multi-frequency (0 to 15 steps)<br>•Select ACC/DEC time (2 steps) •Select ACC/DEC time (4 steps)<br>•Enable 3-wire operation •Coast to a stop<br>•Reset alarm •Enable external alarm trip<br>•Ready for jogging •Select frequency command 2/1<br>•Select motor 2 (M2) •Enable DC braking<br>•Select torque limiter level 2/1 •Switch to commercial power (50 Hz)<br>•Switch to commercial power (60 Hz) •UP (Increase output frequency)<br>•DOWN (Decrease output frequency) •Enable data change with keypad<br>•Cancel PID control •Switch normal/inverse operation<br>•Interlock •Cancel torque control<br>•Enable communications link via RS-485 or fieldbus (option)<br>•Universal DI<br>•Enable auto search for idling motor speed at starting<br>•Force to stop •Pre-excitation (EXITE)<br>•Reset PID integral and differential components<br>•Hold PID integral component •Select local (keypad) operation<br>•Activate the limit switch at start point<br>•Start/reset •Switch to the serial pulse receiving mode<br>•Enter the return mode •Enable overload stop<br>•Servo lock command •Pulse train input<br>•Pulse train sign •Battery / UPS operation<br>•Select torque bias 1 •Select torque bias 2<br>•Hold torque bias •Check brake control<br>•Line speed control •Cancel line speed control<br>•Hold the linel speed control frequency in the memory<br>•Count the run time of commercial power-driven motor 1<br>•Count the run time of commercial power-driven motor 2<br>•Select droop control •Select parameter 1<br>•Select parameter 2 •Cancel customizable logic<br>•Clear all customizable logic timers •Cancel automatic deceleration<br>•Run forward command •Run reverse command<br>•No function assigned •PID multistep command 1<br>•PID multistep command 2<br><br>-SINK/SOURCE is switchable by using the internal slide switch.<br>-These function codes may also switch the logic system between normal and negative to define how the inverter logic interprets either ON or OFF status of each terminal.<br>-Terminal [X5] can be defined as a pulse train input terminal with the function codes.<br>(Using the PG interface interface card makes the pulse train input function assigned to the inverter's terminal [X5] invalid.)<br>Use exclusively with one digital input.<br>0 to 30kHz(Open Collector) / 100kHz(Push-pull) | Operation current at ON<br>Source current: 2.5 to 5 mA<br>Source current: 9.7 to 16 mA<br>(terminal [X5])---Pulse train input<br>Voltage level: 2 V or below<br><br>Operation current at OFF<br>Allowable leakage current:<br>0.5 mA or less<br>Voltage: 22 to 27 VDC |
| | [X2] | Digital input 2 | | |
| | [X3] | Digital input 3 | | |
| | [X4] | Digital input 4 | | |
| | [X5] | Digital input 5 / Pulse train input | | |
| | [FWD] | Run forward command | | |
| | [REV] | Run reverse command | | |

## Terminal Functions

| Categoly | Symbol | Name | Functions | Remarks |
|---|---|---|---|---|
| Transistor outputs | [PLC] | PLC signal power | (1) Power supply for programmable controller output logic circuit (Max DC24V DC100mA.)<br>(2) Power supply for transistor output logic circuit | 24 VDC (22 to 27 VDC), Max. 100 mA<br>This terminal is electrically isolated from terminal [11]s and [CMY].<br>allowable range: +22 to +27 VDC, 50 mA max.<br>Leakage current 0.1mA or less |
| | [CM] | Digital input common | Common terminals for the digital input signals. | |
| | [Y1] | Transistor output 1 | •Inverter running •Inverter output on<br>•Frequency (speed) arrival signal •Frequency (speed) arrival signal 2<br>•Frequency (speed) arrival signal 3 •Frequency (speed) detected<br>•Frequency (speed) detected 2 •Frequency (speed) detected 3<br>•Undervoltage detected (Inverter stopped) •Torque polarity detected<br>•Inverter output limiting<br>•Auto-restarting after momentary power failure<br>•Deceleration after momentary power failure detected<br>•Motor overload early warning •Inverter output limiting with delay<br>•Keypad operation enabled •Inverter ready to run<br>•Select AX terminal function (For MC on primary side)<br>•Stage transition signal for pattern operation<br>•Cycle completion signal for pattern operation<br>•Pattern operation stage 1 •Pattern operation stage 2<br>•Pattern operation stage 4 •Cooling fan in operation<br>•Auto-resetting •Universal DO<br>•Heat sink overheat early warning •Synchronization completed<br>•Lifetime alarm •Reference loss detected<br>•Overload prevention control •Current detected<br>•Current detected 2 •Current detected 3<br>•Low current detected •PID alarm<br>•Under PID control<br>•Motor stopped due to slow flowrate under PID control<br>•Low output torque detected •Torque detected 1<br>•Torque detected 2 •Motor 1 selected<br>•Motor 2 selected •Running forward<br>•Running reverse •In remote operation<br>•Motor overheat detected by thermistor<br>•Brake signal<br>•Terminal [C1] wire break •Speed valid<br>•Speed agreement •PG error detected<br>•Low Voltage detected •Stop position override alarm<br>•Current position count overflowed •Positioning completion signal<br>•Timer output •Maintenance timer<br>•Frequency arrival signal •Alarm indication 1<br>•Alarm indication 2 •Alarm indication 4<br>•Alarm indication 8 •Light alarm<br>•Alarm output (for any alarm) •Enable circuit failure detected<br>•Enable input OFF •Braking transistor broken<br>•Customizable logic output signal 1 •Customizable logic output signal 2<br>•Customizable logic output signal 3 •Customizable logic output signal 4<br>•Customizable logic output signal 5 •Customizable logic output signal 6<br>•Customizable logic output signal 7 •Customizable logic output signal 8<br>•Customizable logic output signal 9 •Customizable logic output signal 10 | |
| | [Y2] | Transistor output 2 | | |
| | [CMY] | Transistor output common | Common terminal for transistor output signal terminals. | This terminal is electrically isolated from terminal [11]s and [CM]s. |
| Relay output | [30A], [30B],[30C] | Alarm relay output (for any error) | -This outputs a non-voltage(dry) contact signal (1c) when the inverter is stopped with the protective function.<br>-As a general-purpose relay output, the same functions as terminal Y can be assigned.<br>-The logic value is switchable between "[30A] and [30C] are excited" and "non-excited." | Contact rating: 250 VAC, 0.3 A cosø=0.3<br>48 VDC, 0.5A<br>Contact life: 200000 times (Switching at intervals of one second) |
| Functional safety | [EN1],<br>[EN2] | Enable Input 1<br>Enable Input 2 | Compliance with EN ISO13849-1;2008 Cat.3 PL:e (Pending)<br>-Turning off the circuit between terminals [EN1] and [PLC] or terminals [EN2] and [PLC] stops the inverter's output transistor. (Safe Torque Off: STO)<br>-These terminals are exclusively used for the source mode input and cannot be switched to the sink mode.<br>-If either one of these input terminals is kept OFF for 50 ms or more, the inverter interprets it as a discrepancy, causing an alarm ECF. This alarm state can be cleared only by turning the inverter off and on. | Source current at Turn-on : 5-10mA<br>Threshold voltage between [PLC] - [EN]<br>: 2V (Turn off)<br>: 22 to 27V (Turn on)<br>leakage current<br>: 0.5mA or less |
| | [PLC] | PLC signal power | (1) Power supply for programmable controller output logic circuit (Max DC24V DC100mA.)<br>(2) Power supply for transistor output logic circuit | |



# Terminal Functions

| Categoly | Symbol | Name | Functions | Remarks |
|---|---|---|---|---|
| Communication | RJ-45 connector for the keypad | Standard RJ-45 connector (RS-485 communication port 1) | (1) Used to connect the inverter with the keypad. The inverter supplies the power to the keypad through the pins specified below. The extension cable for remote operation also uses wires connected to these pins for supplying the keypad power.<br>(2) Remove the keypad from the standard RJ-45 connector, and connect the RS-485 communications cable to control the inverter through the PC or PLC (Programmable Logic Controller).<br><br>The protocol selection is available from the following.<br>- Modbus RTU<br>- Fuji general-purpose inverter protocol<br>- Asynchronous start-stop system • Half-duplex<br>- Max. transmission cable length : 1640 ft (500 m)<br>- Maximum communication speed : 38.4kbps | |
| | [DX+],<br>[DX-],<br>[SD] | Standard RJ-45 connector (RS-485 communication port 2) (*4) | A communications port transmits data through the RS-485 multipoint protocol between the inverter and a personal computer or other equipment such as a PLC.<br><br>The protocol selection is available from the following.<br>- Modbus RTU<br>- Fuji general-purpose inverter protocol<br>- Asynchronous start-stop system • Half-duplex<br>- Max. transmission cable length : 1640 ft (500 m)<br>- Maximum communication speed : 38.4kbps | |
| | [CAN+],<br>[CAN-],<br>[SHLD] | Standard RJ-45 connector (CAN communication port) (*5) | Commicication Profile: CiA CANOpen DS-301 and DSP-402 | |

(*1) In case of applying bais/gain function.
(*2) Only FRN□□□E2□ - □GB has the FM2 output. Not pulse monitor but analog monitor (voltage / current output) is available.
(*3) Exclusive use. Need to swich on the terminal PCB.
(*4) FRN□□□E2□ - □GA has the RJ-45 connector on the terminal PCB. The CAN bus communication is also available via this connector. But it can not use with RS-485 communication at the same time.
FRN□□□E2□ - □GB has the bar terminal on the terminal PCB instead of the RJ45 connector. The CAN bus communication is not available in this type.
(*5) In the RJ-45 connector on the terminal PCB. Concurrent use with RS-485 communications is not available.

# Type

## How To Read The Model Number

FRN 0022 E 2 ■ - 4 □

Series name
FRN: FRENIC Series

Three phase 400V class:
Rating current level of ND specification
[Model: 0002 to 0590]
Three phase 200V class:
Rating current level of HND specification
[Model: 0001 to 0115]
Single phase 200V class:
Rating current level of HHD specification
[Model: 0001 to 0011]

Applicable tiled
For industrial, High performance,Multiple Functionality

Development code 2: 2

Input power supply:
4: Three phase 400V class
2: Three phase 200V class
7: Single phase 200V class

S: Standard (basic type)
E: EMC filter built-in type

Destination:
E: Europe
G●: Global
●: A: 1 CAN terminal, 1 analog current output
: B: NONE CAN terminal, 2 analog current output

# External Dimensions

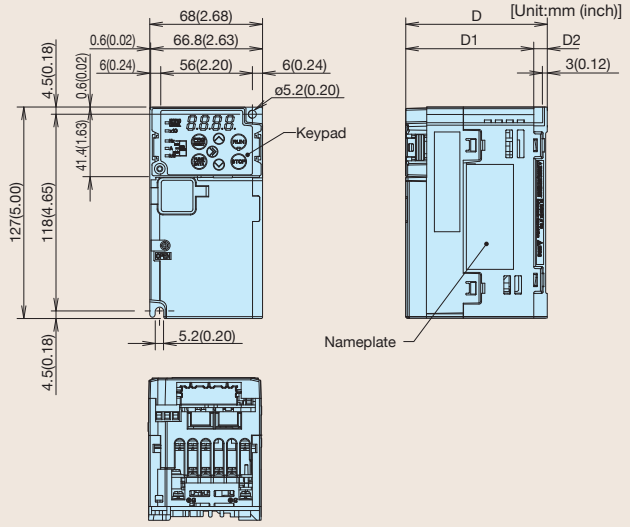


| Power supply voltage | Inverter type | Dimension [mm(inch)] | | |
|---|---|---|---|---|
| | | D | D1 | D2 |
| 3-phase 200V series | FRN0001E2S-2□ | 85(3.35) | 77(3.03) | 8(0.31) |
| | FRN0002E2S-2□ | 85(3.35) | 77(3.03) | 8(0.31) |
| | FRN0004E2S-2□ | 100(3.94) | 77(3.03) | 23(0.91) |
| | FRN0006E2S-2□ | 132(5.20) | 84(3.31) | 48(1.89) |
| 1-phase 200V series | FRN0001E2S-7□ | 85(3.35) | 77(3.03) | 8(0.31) |
| | FRN0002E2S-7□ | 85(3.35) | 77(3.03) | 8(0.31) |
| | FRN0003E2S-7□ | 107(4.21) | 84(3.31) | 23(0.91) |
| | FRN0005E2S-7□ | 152(5.98) | 104(4.09) | 48(1.89) |

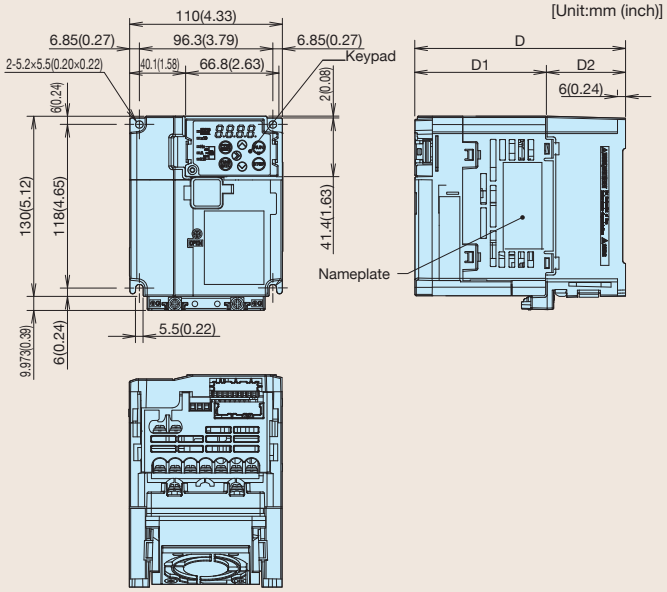


| Power supply voltage | Inverter type | Dimension [mm(inch)] | | |
|---|---|---|---|---|
| | | D | D1 | D2 |
| 3-phase 400V series | FRN0002E2S-4□ | 119(4.69) | 85(3.35) | 34(1.34) |
| | FRN0004E2S-4□ | 143(5.63) | 85(3.35) | 58(2.28) |
| | FRN0006E2S-4□ | 143(5.63) | 85(3.35) | 58(2.28) |
| | FRN0007E2S-4□ | 143(5.63) | 85(3.35) | 58(2.28) |
| 3-phase 200V series | FRN0010E2S-2□ | 143(5.63) | 85(3.35) | 58(2.28) |
| | FRN0012E2S-2□ | 143(5.63) | 85(3.35) | 58(2.28) |
| 1-phase 200V series | FRN0008E2S-7□ | 153(6.02) | 95(3.74) | 58(2.28) |

# External Dimensions

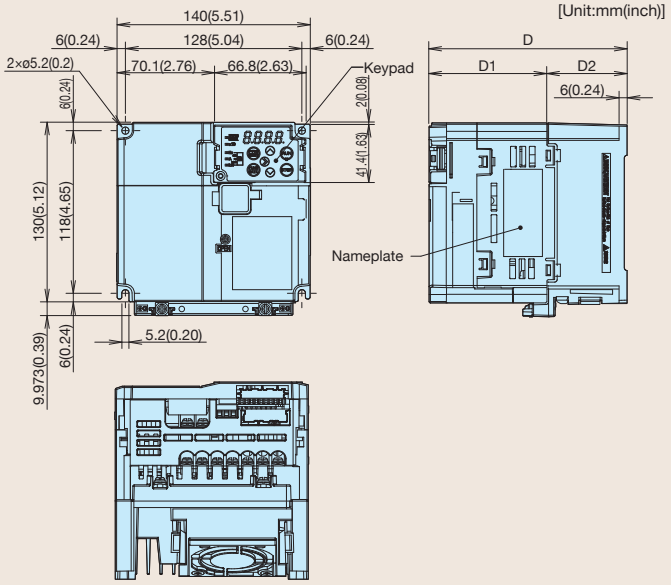


| Power supply voltage | Inverter type | Dimension [mm(inch)] | | |
|---|---|---|---|---|
| | | D | D1 | D2 |
| 3-phase 400V series | FRN0012E2S-4☐ | 143(5.63) | 85(3.35) | 58(2.28) |
| 3-phase 200V series | FRN0020E2S-2☐ | 143(5.63) | 85(3.35) | 58(2.28) |
| 1-phase 200V series | FRN0011E2S-7☐ | 143(5.63) | 85(3.35) | 58(2.28) |

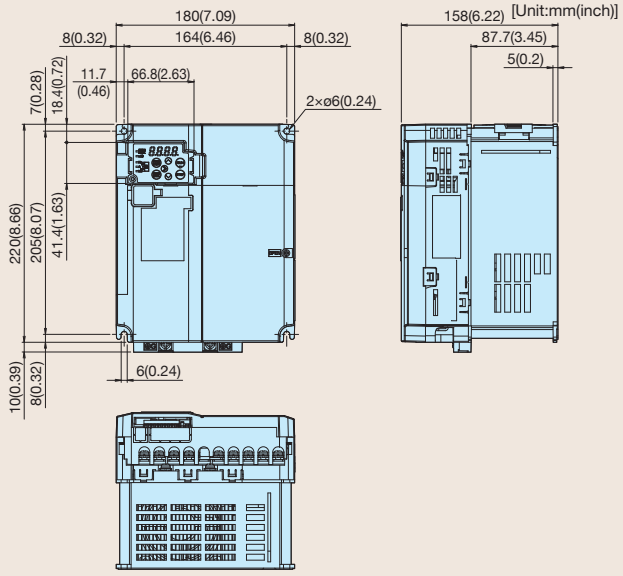


| Power supply voltage | Inverter type |
|---|---|
| 3-phase 400V series | FRN0022E2S-4☐ |
| | FRN0029E2S-4☐ |
| 3-phase 200V series | FRN0030E2S-2☐ |
| | FRN0040E2S-2☐ |

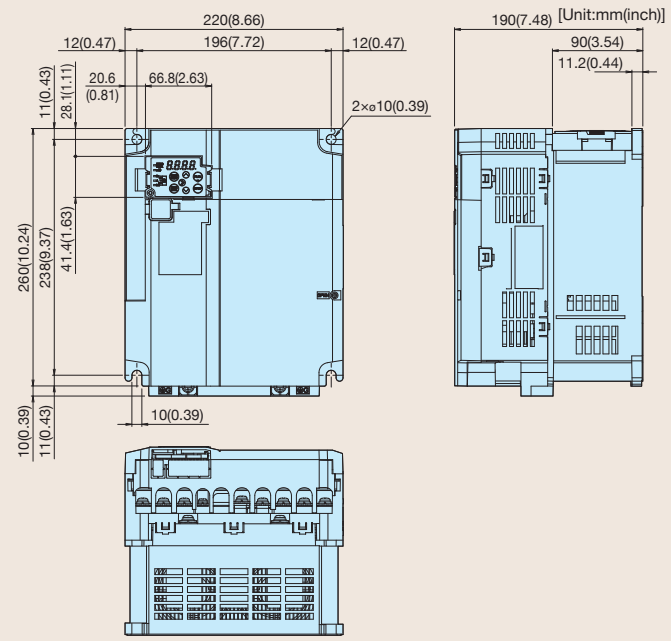


| Power supply voltage | Inverter type |
|---|---|
| 3-phase 400V series | FRN0037E2S-4☐ |
| | FRN0044E2S-4☐ |
| 3-phase 200V series | FRN0056E2S-2☐ |
| | FRN0069E2S-2☐ |

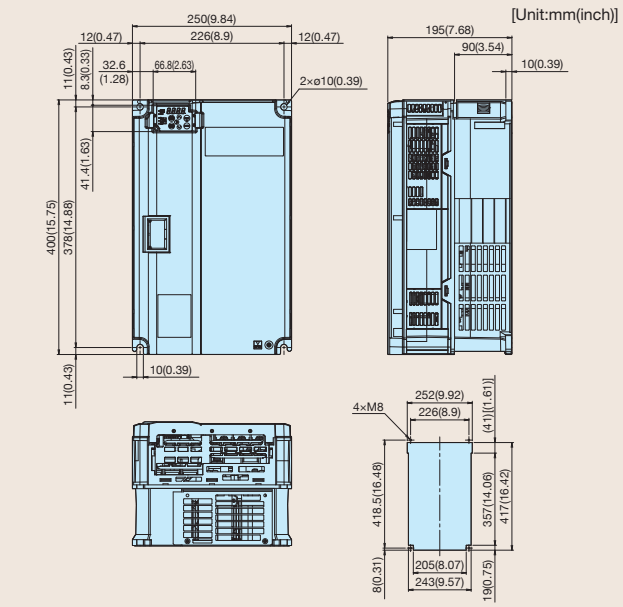


| Power supply voltage | Inverter type |
|---|---|
| 3-phase 400V series | FRN0059E2■-4☐ |
| | FRN0072E2■-4☐ |
| 3-phase 200V series | FRN0088E2■-2☐ |
| | FRN0115E2■-2☐ |

# External Dimensions

[Unit:mm(inch)]

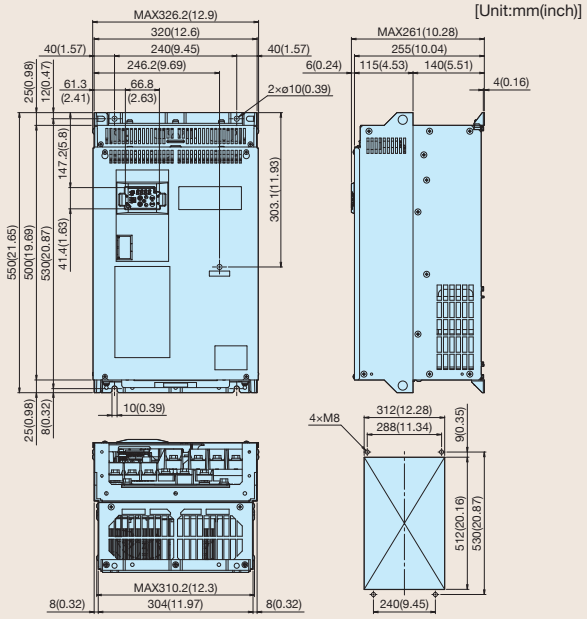


| Power supply voltage | Inverter type |
|---|---|
| 3-phase 400V series | FRN0085E2■-4□ |
| | FRN0105E2■-4□ |

[Unit:mm(inch)]

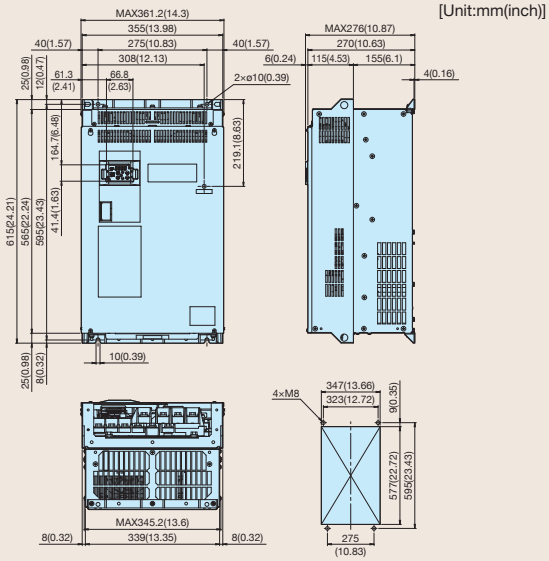


| Power supply voltage | Inverter type |
|---|---|
| 3-phase 400V series | FRN0139E2■-4□ |

[Unit:mm(inch)]

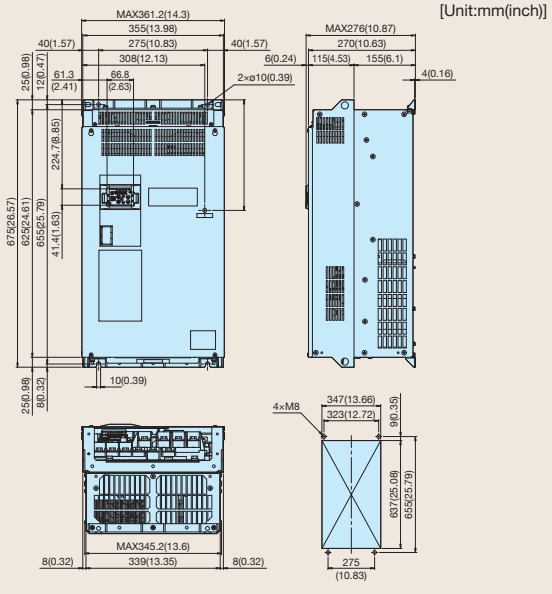


| Power supply voltage | Inverter type |
|---|---|
| 3-phase 400V series | FRN0168E2■-4□ |

[Unit:mm(inch)]

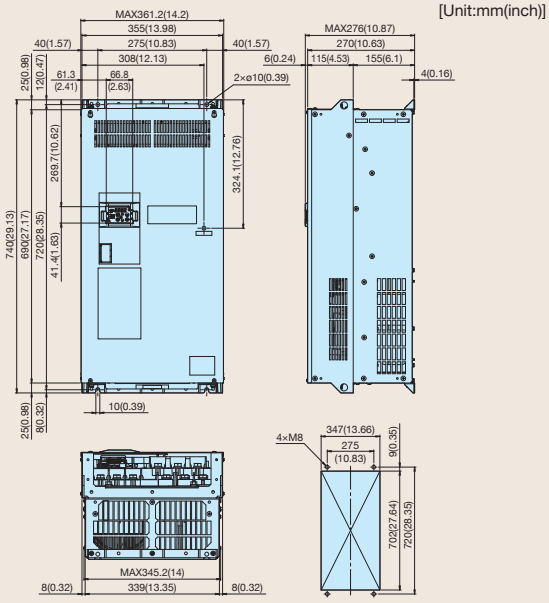


| Power supply voltage | Inverter type |
|---|---|
| 3-phase 400V series | FRN0203E2■-4□ |

# External Dimensions

[Unit:mm(inch)]

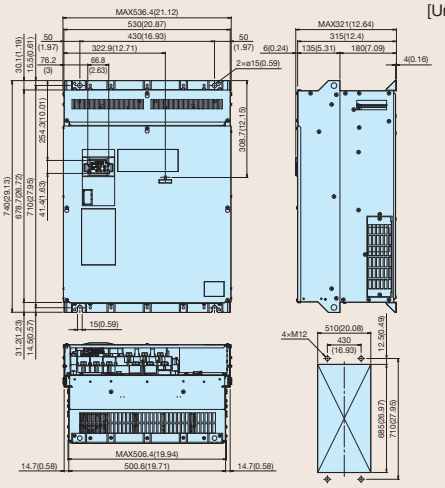


| Power supply voltage | Inverter type |
|---|---|
| 3-phase 400V series | FRN0240E2■-4□ |
| | FRN0290E2■-4□ |

[Unit:mm(inch)]

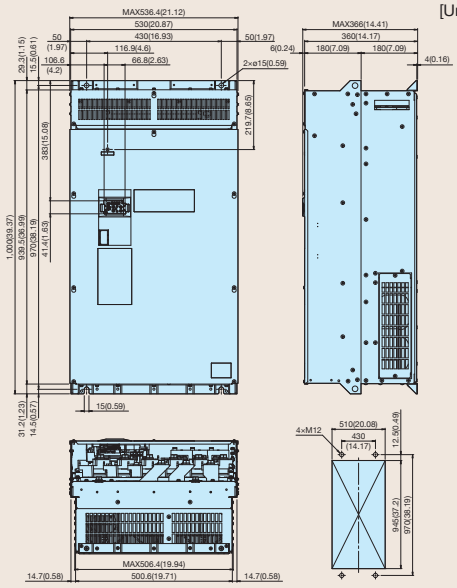


| Power supply voltage | Inverter type |
|---|---|
| 3-phase 400V series | FRN0361E2■-4□ |
| | FRN0415E2■-4□ |

[Unit:mm(inch)]

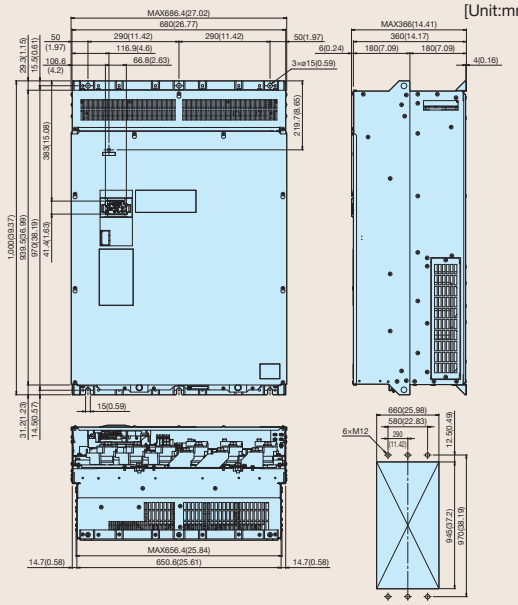


| Power supply voltage | Inverter type |
|---|---|
| 3-phase 400V series | FRN0520E2■-4□ |
| | FRN0590E2■-4□ |

[Unit:mm]

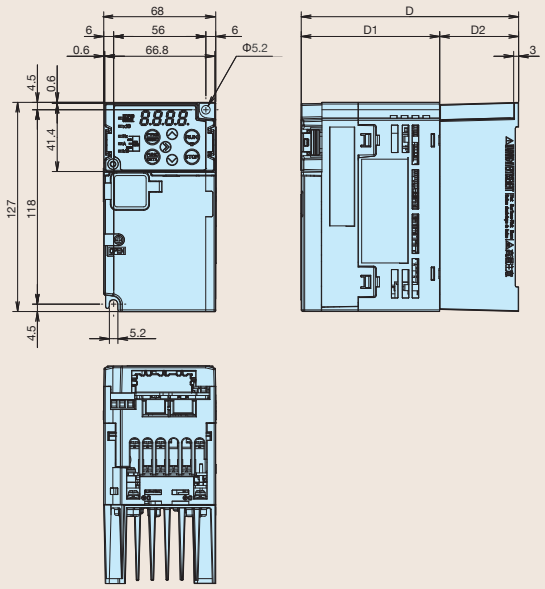


| Power supply voltage | Inverter type | Dimension [mm] | | |
|---|---|---|---|---|
| | | D | D1 | D2 |
| 3-phase 200V series | FRN0001E2E-2GA | 112 | 104 | 8 |
| | FRN0002E2E-2GA | 112 | 104 | 8 |
| | FRN0004E2E-2GA | 127 | 104 | 23 |
| | FRN0006E2E-2GA | 152 | 104 | 48 |
| 1-phase 200V series | FRN0001E2E-7GA | 112 | 104 | 8 |
| | FRN0002E2E-7GA | 112 | 104 | 8 |
| | FRN0003E2E-7GA | 127 | 104 | 23 |

# External Dimensions

[Unit:mm]

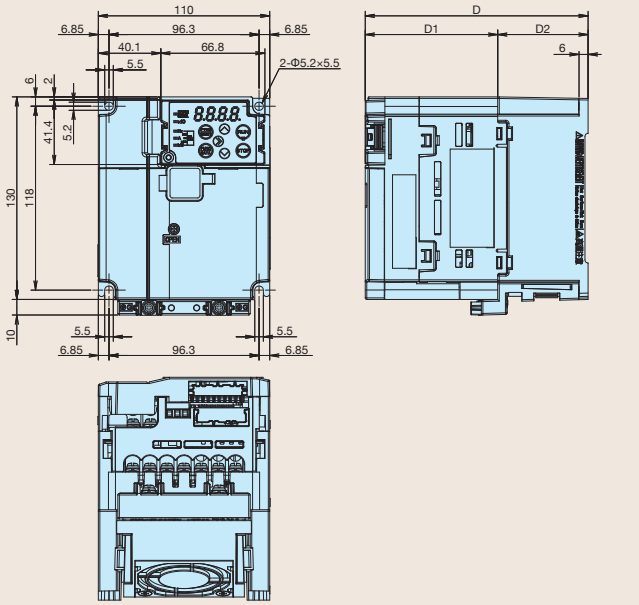


| Power supply voltage | Inverter type | Dimension [mm] | | |
|---|---|---|---|---|
| | | D | D1 | D2 |
| 3-phase 400V series | FRN0002E2E-4GA | 162 | 128 | 34 |
| | FRN0004E2E-4GA | 186 | 128 | 58 |
| 1-phase 200V series | FRN0005E2E-7GA | 129 | 95 | 34 |

[Unit:mm]

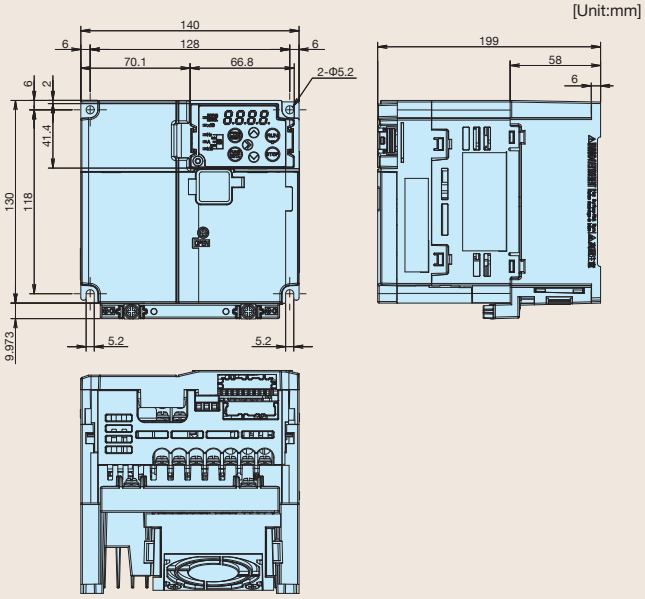


| Power supply voltage | Inverter type |
|---|---|
| 3-phase 400V series | FRN0006E2E-4GA |
| | FRN0007E2E-4GA |
| | FRN0012E2E-4GA |
| 3-phase 200V series | FRN0010E2E-2GA |
| | FRN0012E2E-2GA |
| | FRN0020E2E-2GA |
| 1-phase 200V series | FRN0008E2E-7GA |
| | FRN0011E2E-7GA |

[Unit:mm]

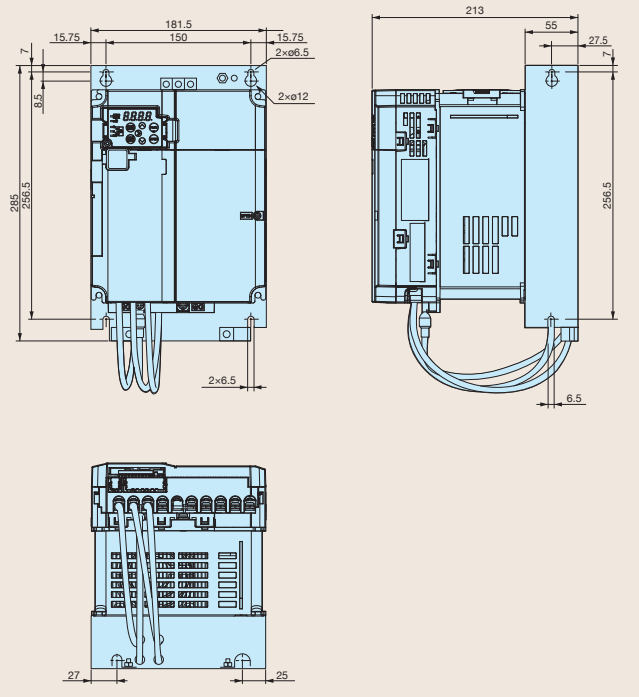


| Power supply voltage | Inverter type |
|---|---|
| 3-phase 400V series | FRN0022E2E-4E |
| | FRN0029E2E-4E |

[Unit:mm]

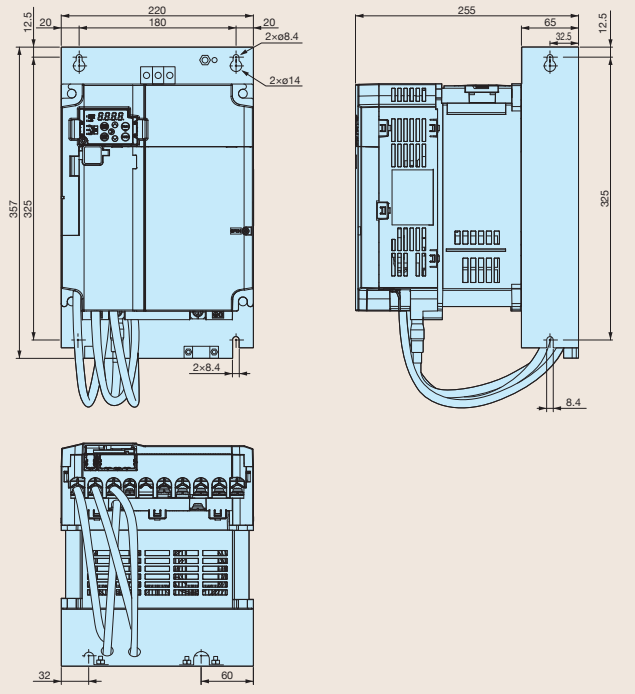


| Power supply voltage | Inverter type |
|---|---|
| 3-phase 400V series | FRN0037E2E-4E |
| | FRN0044E2E-4E |

## Keypad

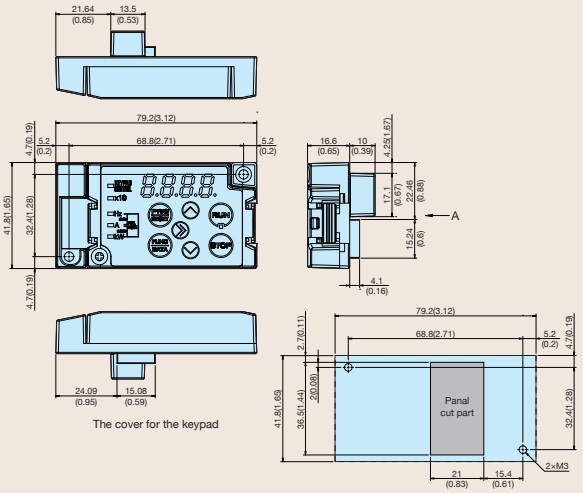


Figure of panel cut dimensions (Arrow A)

TP-A1-E2C Multi function Keypad (Option)

[Unit:mm(inch)]

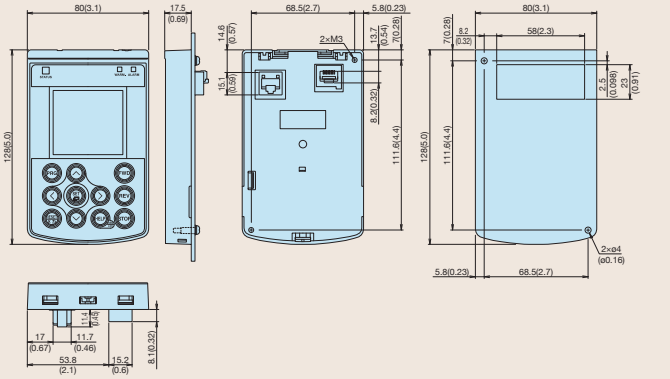

# Options

## NEMA1 Kit

| Power supply Voltage | Inverter type | Option type |
|---|---|---|
| Three-phase 400V | FRN0002E2S-4# | NEMA1-02E2-4 |
| | FRN0004E2S-4# | NEMA1-12E2-24 |
| | FRN0006E2S-4# | |
| | FRN0007E2S-4# | |
| | FRN0012E2S-4# | NEMA1-20E2-247 |
| | FRN0022E2S-4# | NEMA1-40E2-24 |
| | FRN0029E2S-4# | |
| | FRN0037E2S-4# | NEMA1-69E2-24 |
| | FRN0044E2S-4# | |
| | FRN0059E2■-4# | NEMA1-72E2-4 |
| | FRN0072E2■-4# | |
| | FRN0085E2■-4# | NEMA1-105E2-4 |
| | FRN0105E2■-4# | |
| | FRN0139E2■-4# | NEMA1-203E2-4 |
| | FRN0168E2■-4# | |
| | FRN0203E2■-4# | |
| | FRN0240E2■-4# | NEMA1-110G1-4 |
| | FRN0290E2■-4# | |
| | FRN0361E2■-4# | NEMA1-160G1-4 |
| | FRN0415E2■-4# | |
| | FRN0520E2■-4# | NEMA1-590E2-4 |
| | FRN0590E2■-4# | |

| Power supply Voltage | Inverter type | Option type |
|---|---|---|
| Three-phase 200V | FRN0001E2S-2# | NEMA1-02E2-27 |
| | FRN0001E2S-2# | |
| | FRN0004E2S-2# | NEMA1-04E2-2 |
| | FRN0006E2S-2# | NEMA1-06E2-2 |
| | FRN0010E2S-2# | NEMA1-12E2-24 |
| | FRN0012E2S-2# | |
| | FRN0020E2S-2# | NEMA1-20E2-247 |
| | FRN0030E2S-2# | NEMA1-40E2-24 |
| | FRN0040E2S-2# | |
| | FRN0056E2S-2# | NEMA1-69E2-24 |
| | FRN0069E2S-2# | |
| | FRN0088E2■-2# | NEMA1-72E2-4 |
| | FRN0115E2■-2# | |
| Single-phase 400V | FRN0001E2S-7# | NEMA1-02E2-27 |
| | FRN0002E2S-7# | |
| | FRN0003E2S-7# | NEMA1-03E2-7 |
| | FRN0005E2S-7# | NEMA1-05E2-7 |
| | FRN0008E2S-7# | NEMA1-08E2-7 |
| | FRN0011E2S-7# | NEMA1-20E2-247 |

#: Destination GA: for global w/ terminal block, GB: for global w/o terminal block, E: for Europe.
■: S: Standard (basic type), E: EMC filter built-in type (0059 to 0590)

# Options

## Adapter

| Type | Option | Functions |
|---|---|---|
| OPC-E2-ADP1 | Mounting adapter for option card | ADP1:The adapter is mounted on the front side of the inverter. The adapter is used from 0002 to 0044 of 400V, 0001 to 0069 of 200V for FRENIC-Ace. |
| OPC-E2-ADP2 | | ADP2:The adapter is mounted inside of the inverter. The adapter is used from 0059 to 0072 of 400V , 0069 to 0115 of 200V for FRENIC-Ace. |
| OPC-E2-ADP3 | | ADP3:The adapter is mounted inside of the inverter. The adapter is used in more than 0085 of 400V for FRENIC-Ace. |

## Communication, I/O Parts

| Type | Option | Functions |
|---|---|---|
| OPC-DEV | DeviceNet communications card | This card enables operation instruction and frequency command to be set from the DeviceNet master, allowing operation conditions to be monitored and all the function codes to be changed and checked.<br>**No. of connection nodes:** max. 64 units (including the master unit)<br>**MAC ID:** 0~63<br>**Insulation:** 500V DC (photocoupler insulation)<br>**Communications rate:** 500kbps/250kbps/125kbps<br>**Network consumed power:** max. 80mA, 24V DC |
| OPC-CCL | CC-Link communications card | By connecting this card with the CC-Link master unit, the communications rate up to 10Mbps can be supported and the transmission distance is covered up to 1200m(3900ft) in total.<br>**No. of connection units:** 42 units<br>**Communications method:** CC-Link Ver1.10 and Ver2.0<br>**Communications rate:** 156kbps~ |
| OPC-PDP3 | PROFIBUS-DP communications card | This card enables operation instruction and frequency command to be set from the PROFIBUS-DP master, allowing operation conditions to be monitored and all the function codes to be changed and checked.<br>**Communications rate:** 9.6kbps~12Mbps<br>**Transmission distance:** ~1,200m(3900ft)<br>**Connection connector:** 2×6-pole terminal block |
| OPC-COP2 | CANopen communications card | This card enables operation instruction and frequency command to be set from the CANopen master (such as PC and PLC), allowing all the function codes to be set and checked.<br>**No. of connection nodes:** 127 units<br>**Communications rate:** 20k, 50k, 125k, 250k, 500k, 800k, 1Mbps<br>**Transmission distance:** ~2,500m(8200ft) |
| OPC-PRT3 | EtherNet comunication card | This interface card allows to connect FRENIC-Ace to a Ethernet network.<br>Supported protocols currently include:PROFINET IO,EtherNet/IP |
| OPC- DIO | Digital I/O interface card | DI: The frequency set-point can be given by 8,12 bits and BCD code(0 to 99.9/0 to 999) and extended 13 digital inputs are available mounting this card in the inverter. DO: The monitoring with 8bit binary code and the digital outputs (extended 8 point) are available. |
| OPC-AIO | Analog I/O interface card | The Analog I/O interface card enables the FRENIC-Ace series of the inverter to input analog set-points to the inverter and output analog monitors from the inverter. |

* Parts adapter is necessary on the occasion of setting.

## Parts Using The Control Terminal Stand

| Type | Option | Functions |
|---|---|---|
| OPC-E2-RS | RS485 communications card | The RS-485 communications card provides two ports exclusively designed for use with the FRENIC-Ace series of the inverters. |
| OPC-E2-PG | PG interface (5V ) card | Speed control ,position control and synchronous drive are available mounting this card in the inverter.<br>• Open collector (pull-up resistor: 620Ω):30kHz<br>• Complementary (totem-pole push-pull)<br>• Voltage output |
| OPC-E2-PG3 | PG interface (12/15V ) card | Speed control, position control and synchronous drive are available mounting this card in the inverter.<br>• Open collector (pull-up resistor: 2350Ω):30kHz<br>• Complementary (totem-pole push-pull)<br>• Voltage output:100kHz |

## Keypad

| Type | Option | Functions |
|---|---|---|
| TP-A1-E2C | Multi-functional keypad | LCD(Liquid Crystal Display) with a back light. |
| TP-E1U | Keypad with USB | The keypad for the USB connection with the pc. |

# DC Reactor (DCR□-□□□)



Fig. A

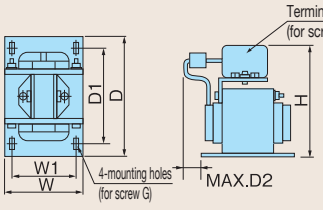


Fig. B

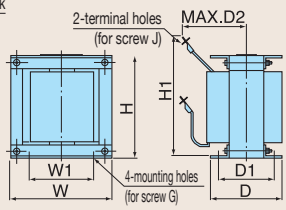


Fig. C

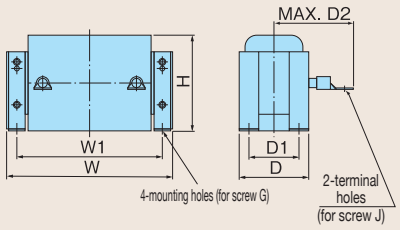


| Voltage | Nominal applied motor [kW] | Inverter Type | | | | REACTOR Type | Fig | Dimension [mm] | | | | | | | | | Approx Weight [kg] |
|---|---|---|---|---|---|---|---|---|---|---|---|---|---|---|---|---|---|
| | | ND Specification | HD Specification | HND Specification | HHD Specification | | | W | W1 | D | D1 | D2 | H | H1 | G | J | |
| 3-phase 400V | 0.4 | – | – | – | FRN0002E2■-4# | DCR4-0.4 | A | 66 | 56 | 90 | 72 | 15 | 94 | — | M4(5.2×8) | M4 | 1 |
| | 0.75 | FRN0002E2■-4# | FRN0002E2■-4# | FRN0002E2■-4# | FRN0004E2■-4# | DCR4-0.75 | | | | | | 20 | | | | | 1.4 |
| | 1.1 | – | FRN0004E2■-4# | FRN0004E2■-4# | – | DCR4-1.5 | | | | | | | | | | | 1.6 |
| | 1.5 | FRN0004E2■-4# | – | – | FRN0006E2■-4# | DCR4-1.5 | | | | | | | | | | | |
| | 2.2 | FRN0006E2■-4# | FRN0006E2■-4# | FRN0006E2■-4# | FRN0007E2■-4# | DCR4-2.2 | | 86 | 71 | 100 | 80 | 15 | 110 | — | M5(6×9) | | 2 |
| | 3 | FRN0007E2■-4# | FRN0007E2■-4# | FRN0007E2■-4# | – | DCR4-3.7 | | | | | | 20 | | | | | 2.6 |
| | 3.7 | – | – | – | FRN0012E2■-4# | DCR4-3.7 | | | | | | | | | | | |
| | 5.5 | FRN0012E2■-4# | FRN0012E2■-4# | FRN0012E2■-4# | FRN0022E2■-4# | DCR4-5.5 | | | | | | | | | | | |
| | 7.5 | – | FRN0022E2■-4# | FRN0022E2■-4# | FRN0029E2■-4# | DCR4-7.5 | | 111 | 95 | | | 24 | 130 | | M6(7×11) | M5 | 4.2 |
| | 11 | FRN0022E2■-4# | FRN0029E2■-4# | FRN0029E2■-4# | FRN0037E2■-4# | DCR4-11 | | | | | | | | | | | 4.3 |
| | 15 | FRN0029E2■-4# | FRN0037E2■-4# | FRN0037E2■-4# | FRN0044E2■-4# | DCR4-15 | | 146 | 124 | 120 | 96 | 15 | 168 | | | | 5.9 |
| | 18.5 | FRN0037E2■-4# | FRN0044E2■-4# | FRN0044E2■-4# | FRN0059E2■-4# | DCR4-18.5 | | | | | | 25 | 171 | | | M6 | 7.2 |
| | 22 | FRN0044E2■-4# | FRN0059E2■-4# | FRN0059E2■-4# | FRN0072E2■-4# | DCR4-22A | | | | | | | | | | | |
| | 30 | FRN0059E2■-4# | FRN0072E2■-4# | FRN0072E2■-4# | FRN0085E2■-4# | DCR4-30B | B | 152 | 90 | 157 | 115 | 100 | 130 | 190 | M6(ø8) | M8 | 13 |
| | 37 | FRN0072E2■-4# | FRN0085E2■-4# | FRN0085E2■-4# | FRN0105E2■-4# | DCR4-37C | C | 210 | 185 | 101 | 81 | 105 | 125 | — | M6(7×13) | | 7.4 |
| | 45 | FRN0085E2■-4# | FRN0105E2■-4# | FRN0105E2■-4# | FRN0139E2■-4# | DCR4-45B | B | 171 | 110 | 165 | 125 | 110 | 150 | 210 | M6(ø8) | | 18 |
| | | | | | | DCR4-45C | C | 210 | 185 | 106 | 86 | 120 | 125 | — | M6(7×13) | | 8.4 |
| | 55 | FRN0105E2■-4# | FRN0139E2■-4# | FRN0139E2■-4# | FRN0168E2■-4# | DCR4-55B | B | 171 | 110 | 170 | 130 | 110 | 150 | 210 | M6(ø8) | | 20 |
| | | | | | | DCR4-55C | C | 255 | 225 | 96 | 76 | 120 | 145 | — | M6(7×13) | M10 | 11 |
| | 75 | FRN0139E2■-4# | FRN0168E2■-4# | FRN0168E2■-4# | FRN0203E2■-4# | DCR4-75C | | | | 106 | 86 | 125 | | | | | 13 |
| | 90 | FRN0168E2■-4# | FRN0203E2■-4# | FRN0203E2■-4# | FRN0240E2■-4# | DCR4-90C | | | | 116 | 96 | 140 | | | | M12 | 15 |
| | 110 | FRN0203E2■-4# | FRN0240E2■-4# | FRN0240E2■-4# | FRN0290E2■-4# | DCR4-110C | | 300 | 265 | | 90 | 175 | 155 | | M8(10×18) | | 19 |
| | 132 | FRN0240E2■-4# | FRN0290E2■-4# | FRN0290E2■-4# | FRN0361E2■-4# | DCR4-132C | | | | | 100 | 180 | 160 | | | | 22 |
| | 160 | FRN0290E2■-4# | FRN0361E2■-4# | FRN0361E2■-4# | FRN0415E2■-4# | DCR4-160C | | 350 | 310 | 131 | 103 | | 190 | | M10(12×22) | | 26 |
| | 200 | FRN0361E2■-4# | FRN0415E2■-4# | FRN0415E2■-4# | FRN0520E2■-4# | DCR4-200C | | | | 141 | 113 | 185 | | | | | 30 |
| | 220 | FRN0415E2■-4# | FRN0520E2■-4# | FRN0520E2■-4# | FRN0590E2■-4# | DCR4-220C | | | | 146 | 118 | 200 | | | | | 33 |
| | 250 | – | FRN0590E2■-4# | – | – | DCR4-250C | | | | 161 | 133 | 210 | | | | | 35 |
| | 280 | FRN0520E2■-4# | – | FRN0590E2■-4# | – | DCR4-280C | | | | | | | | | | M16 | 37 |
| | 315 | FRN0590E2■-4# | – | – | – | DCR4-315C | | 400 | 345 | 146 | 118 | 200 | 225 | | | | 40 |
| 3-phase 200V | 0.1 | – | – | – | FRN0001E2■-2# | DCR2-0.2 | A | 66 | 56 | 90 | 72 | 5 | 94 | — | M4(5.2×8) | M4 | 0.8 |
| | 0.2 | – | – | FRN0001E2■-2# | FRN0002E2■-2# | DCR2-0.2 | | | | | | 15 | | | | | 1 |
| | 0.4 | – | – | FRN0002E2■-2# | FRN0004E2■-2# | DCR2-0.4 | | | | | | | | | | | 1.4 |
| | 0.75 | – | – | FRN0004E2■-2# | FRN0006E2■-2# | DCR2-0.75 | | | | | | 20 | | | | | 1.6 |
| | 1.1 | – | – | FRN0006E2■-2# | – | DCR2-1.5 | | | | | | | | | | | |
| | 1.5 | – | – | – | FRN0010E2■-2# | DCR2-1.5 | | | | | | | | | | | |
| | 2.2 | – | – | FRN0010E2■-2# | FRN0012E2■-2# | DCR2-2.2 | | 86 | 71 | 100 | 80 | 10 | 110 | | M5(6×9) | | 1.8 |
| | 3 | – | – | FRN0012E2■-2# | – | DCR2-3.7 | | | | | | 20 | | | | | 2.6 |
| | 3.7 | – | – | – | FRN0020E2■-2# | DCR2-3.7 | | | | | | | | | | | |
| | 5.5 | – | – | FRN0020E2■-2# | FRN0030E2S-2# | DCR2-5.5 | | 111 | 95 | | | | 130 | | M6(7×11) | M5 | 3.6 |
| | 7.5 | – | – | FRN0030E2S-2# | FRN0040E2S-2# | DCR2-7.5 | | | | | | 23 | | | | | 3.8 |
| | 11 | – | – | FRN0040E2S-2# | FRN0056E2S-2# | DCR2-11 | | | | | | 24 | 137 | | | M6 | 4.3 |
| | 15 | – | – | FRN0056E2S-2# | FRN0069E2S-2# | DCR2-15 | | 146 | 124 | 120 | 96 | 15 | 180 | | | M8 | 5.9 |
| | 18.5 | – | – | FRN0069E2S-2# | FRN0088E2S-2# | DCR2-18.5 | | | | | | 25 | | | | | 7.4 |
| | 22 | – | – | FRN0088E2S-2# | FRN0115E2S-2# | DCR2-22A | | | | | | | | | | | 7.5 |
| | 30 | – | – | FRN0115E2S-2# | – | DCR2-30B | | 152 | 90 | 156 | 116 | 115 | 130 | 190 | M6(ø8) | M10 | 12 |
| single-phase 200V | 0.1 | – | – | – | FRN0001E2■-7# | DCR2-0.2 | A | 66 | 56 | 90 | 72 | 5 | 94 | — | M4(5.2×8) | M4 | 0.8 |
| | 0.2 | – | – | – | FRN0002E2■-7# | DCR2-0.4 | | | | | | 15 | | | | | 1.4 |
| | 0.4 | – | – | – | FRN0003E2■-7# | DCR2-0.75 | | | | | | 20 | | | | | 1.6 |
| | 0.75 | – | – | – | FRN0005E2■-7# | DCR2-1.5 | | | | | | | | | | | |
| | 1.5 | – | – | – | FRN0008E2■-7# | DCR2-3.7 | | 86 | 71 | 100 | 80 | | 110 | | M5(6×9) | | 2.6 |
| | 2.2 | – | – | – | FRN0011E2■-7# | DCR2-3.7 | | | | | | | | | | | |

■: S: Standard (basic type), E: EMC filter built-in type
#: Destination GA: for global w/ terminal block, GB: for global w/o terminal block, E: for Europe.

# NOTES

## When running general-purpose motors

- **Driving a 400V general-purpose motor**
  When driving a 400V general-purpose motor with an inverter using extremely long cables, damage to the insulation of the motor may occur. Use an output circuit filter (OFL) if necessary after checking with the motor manufacturer. Fuji's motors do not require the use of output circuit filters because of their reinforced insulation.
- **Torque characteristics and temperature rise**
  When the inverter is used to run a general-purpose motor, the temperature of the motor becomes higher than when it is operated using a commercial power supply. In the low-speed range, the cooling effect will be weakened, so decrease the output torque of the motor. If constant torque is required in the low-speed range, use a Fuji inverter motor or a motor equipped with an externally powered ventilating fan.
- **Vibration**
  When the motor is mounted to a machine, resonance may be caused by the natural frequencies, including that of the machine. Operation of a 2-pole motor at 60Hz or more may cause abnormal vibration.
  * Study use of tier coupling or dampening rubber.
  * It is also recommended to use the inverter jump frequency control to avoid resonance points.
- **Noise**
  When an inverter is used with a general-purpose motor, the motor noise level is higher than that with a commercial power supply. To reduce noise, raise carrier frequency of the inverter. High-speed operation at 60Hz or more can also result in more noise.

## When running special motors

- **Explosion-proof motors**
  When driving an explosion-proof motor with an inverter, use a combination of a motor and an inverter that has been approved in advance.
- **Brake motors**
  For motors equipped with parallel-connected brakes, their braking power must be supplied from the primary circuit (commercial power supply). If the brake power is connected to the inverter power output circuit (secondary circuit) by mistake, problems may occur.
  Do not use inverters for driving motors equipped with series-connected brakes.
- **Geared motors**
  If the power transmission mechanism uses an oil-lubricated gearbox or speed changer/reducer, then continuous motor operation at low speed may cause poor lubrication. Avoid such operation.
- **Single-phase motors**
  Single-phase motors are not suitable for inverter-driven variable speed operation. Use three-phase motors.

## Environmental conditions

- **Installation location**
  Use the inverter in a location with an ambient temperature range of -10 to 50˚C.
  The inverter and braking resistor surfaces become hot under certain operating conditions. Install the inverter on nonflammable material such as metal.
  Ensure that the installation location meets the environmental conditions specified in "Environment" in inverter specifications.

## Combination with peripheral devices

- **Installing a molded case circuit breaker (MCCB)**
  Install a recommended molded case circuit breaker (MCCB) or an earth leakage circuit breaker (ELCB) in the primary circuit of each inverter to protect the wiring. Ensure that the circuit breaker capacity is equivalent to or lower than the recommended capacity.
- **Installing a magnetic contactor (MC) in the output (secondary) circuit**
  If a magnetic contactor (MC) is mounted in the inverter's secondary circuit for switching the motor to commercial power or for any other purpose, ensure that both the inverter and the motor are fully stopped before you turn the MC on or off. Remove the surge killer integrated with the MC.
- **Installing a magnetic contactor (MC) in the input (primary) circuit**
  Do not turn the magnetic contactor (MC) in the primary circuit on or off more than once an hour as an inverter fault may result. If frequent starts or stops are required during motor operation, use FWD/REV signals.
- **Protecting the motor**
  The electronic thermal facility of the inverter can protect the general-purpose motor. The operation level and the motor type (general-purpose motor, inverter motor) should be set. For high-speed motors or water-cooled motors, set a small value for the thermal time constant to protect the motor.
  If you connect the motor thermal relay to the motor with a long cable, a high-frequency current may flow into the wiring stray capacitance. This may cause the relay to trip at a current lower than the set value for the thermal relay. If this happens, lower the carrier frequency or use the output circuit filter (OFL).
- **Discontinuance of power-factor correcting capacitor**
  Do not mount power factor correcting capacitors in the inverter (primary) circuit. (Use the DC REACTOR to improve the inverter power factor.) Do not use power factor correcting capacitors in the inverter output circuit (secondary). An overcurrent trip will occur, disabling motor operation.
- **Discontinuance of surge killer**
  Do not mount surge killers in the inverter output (secondary) circuit.
- **Reducing noise**
  Use of a filter and shielded wires are typical measures against noise to ensure that EMC Directives are met.
- **Measures against surge currents**
  If an overvoltage trip occurs while the inverter is stopped or operated under a light load, it is assumed that the surge current is generated by open/close of the phase-advancing capacitor in the power system.
  We recommend connecting a DC REACTOR to the inverter.
- **Megger test**
  When checking the insulation resistance of the inverter, use a 500V megger and follow the instructions contained in the Instruction Manual.

## Wiring

- **Wiring distance of control circuit**
  When performing remote operation, use the twisted shield wire and limit the distance between the inverter and the control box to 20m.
- **Wiring length between inverter and motor**
  If long wiring is used between the inverter and the motor, the inverter will overheat or trip as a result of overcurrent (high-frequency current flowing into the stray capacitance) in the wires connected to the phases. Ensure that the wiring is shorter than 50m. If this length must be exceeded, lower the carrier frequency or mount an output circuit filter (OFL).
  When wiring is longer than 50m, and sensorless vector control or vector control with speed sensor is selected, execute off-line tuning.
- **Wiring size**
  Select cables with a sufficient capacity by referring to the current value or recommended wire size.
- **Wiring type**
  Do not use multicore cables that are normally used for connecting several inverters and motors.
- **Grounding**
  Securely ground the inverter using the grounding terminal.

## Selecting inverter capacity

- **Driving general-purpose motor**
  Select an inverter according to the applicable motor ratings listed in the standard specifications table for the inverter. When high starting torque is required or quick acceleration or deceleration is required, select an inverter with a capacity one size greater than the standard.
- **Driving special motors**
  Select an inverter that meets the following condition: Inverter rated current > Motor rated current.

## Transportation and storage

When transporting or storing inverters, follow the procedures and select locations that meet the environmental conditions that agree with the inverter specifications.

Fuji Electric Co., Ltd.

Gate City Ohsaki, East Tower, 11-2,
Osaki 1-chome, Shinagawa-ku,
Tokyo 141-0032, Japan
Phone: +81-3-5435-7190 Fax: +81-3-5435-7420
URL: http://www.fujielectric.com/

Printed on recycled paper

Information in this catalog is subject to change without notice.

Printed in Japan 2017-04(D17f/B14)CM00 FOLS
Updated: 2024-08 Fuji Electric Corp. Of America