Temperature Controllers

E5CSL/E5CWL/E5EWL

The Simple and New Temperature Controller is Released that Easily Achieves the Temperature Control.

- Easy to Read (Character Height E5CSL: 21.7 mm, E5CWL: 16.2 mm (PV), E5EWL: 20 mm (PV)).
- Depth beyond front panel: Only 60 mm.
- Fewer parameters for simple setup.
- Faster sampling at 250 ms.

Note: Refer to Precautions on page 9.



48 × 48 mm
E5CSL



48 × 48 mm
E5CWL



48 × 96 mm
E5EWL

Main I/O Functions

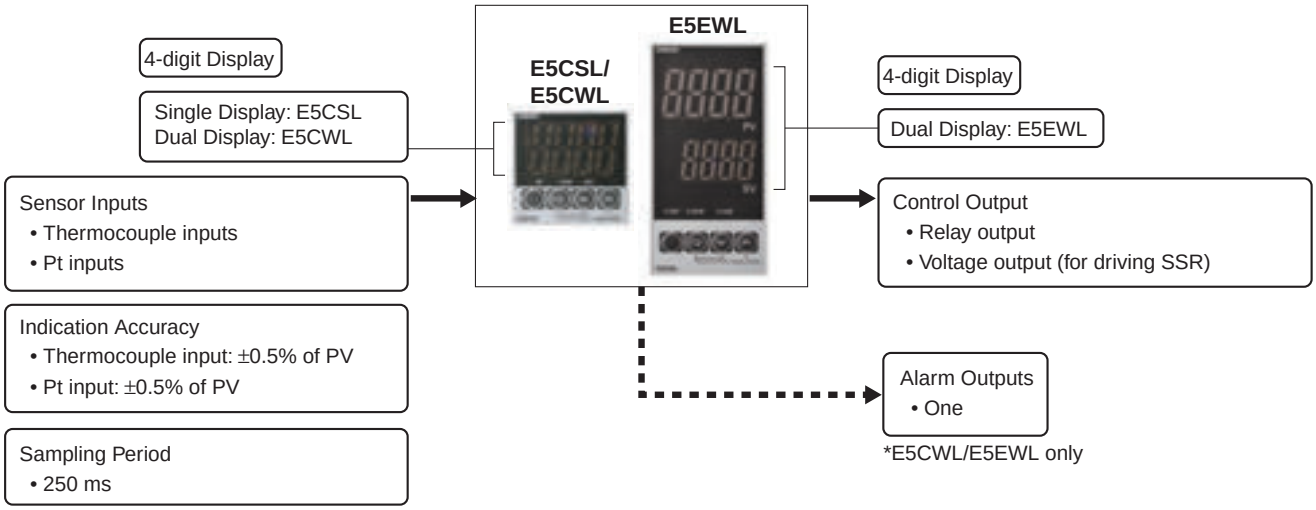

Model Number Structure

Model Number Legend

E5CSL-□□
1 2

1. Control Output
R: Relay output: 250 VAC, 3 A
Q: Voltage output (for driving SSR): 12 VDC, 21 mA
2. Sensor type
TC: Thermocouple (K, J, T, R, or S)
P: Platinum resistance thermometer (Pt100)

E5CWL-□1□
1 2 3

1. Control Output
R: Relay output: 250 VAC, 3 A
Q: Voltage output (for driving SSR): 12 VDC, 21 mA
2. Alarm
1: Relay output: 250 VAC, 1 A (resistive load)
3. Sensor type
TC: Thermocouple (K, J, T, R, or S)
P: Platinum resistance thermometer (Pt100)

E5EWL-□1□
1 2 3

1. Control Output
R: Relay output: 250 VAC, 3 A
Q: Voltage output (for driving SSR): 12 VDC, 21 mA
2. Alarm
1: Relay output: 250 VAC, 1 A (resistive load)
3. Sensor type
TC: Thermocouple (K, J, T, R, or S)
P: Platinum resistance thermometer (Pt100)

Ordering Information

E5CSL

Size	Power supply voltage	Input type	Alarm output	Control output	Model
1/16 DIN 48 × 48 × 60 (W × H × D)	100 to 240 VAC	Thermocouple	None	Relay output	**E5CSL-RTC**
		Resistance thermometer			**E5CSL-RP**
		Thermocouple		Voltage output (for driving SSR)	**E5CSL-QTC**
		Resistance thermometer			**E5CSL-QP**

E5CWL

Size	Power supply voltage	Input type	Alarm output	Control output	New model
1/16 DIN 48 × 48 × 60 (W × H × D)	100 to 240 VAC	Thermocouple	1	Relay output	**E5CWL-R1TC**
		Resistance thermometer			**E5CWL-R1P**
		Thermocouple		Voltage output (for driving SSR)	**E5CWL-Q1TC**
		Resistance thermometer			**E5CWL-Q1P**

E5EWL

Size	Power supply voltage	Input type	Alarm output	Control output	New model
1/8 DIN 48 × 96 × 60 (W × H × D)	100 to 240 VAC	Thermocouple	1	Relay output	**E5EWL-R1TC**
		Resistance thermometer			**E5EWL-R1P**
		Thermocouple		Voltage output (for driving SSR)	**E5EWL-Q1TC**
		Resistance thermometer			**E5EWL-Q1P**

Accessories (Order Separately)

Terminal Cover

Model	E53-COV19

Front Panel (for E5CSL/E5CWL)

Model	E53-COV20

Note: 1. This Front Panel accessory is required to attach the Y92A-48B or Y92A-48D.
2. This Front Panel accessory is only the frame. It does not include the plastic cover.

Adapter

Model	Remarks
Y92F-45	• Use this Adapter when the Front Panel has already been prepared for the E5B□. • Only black is available. • Order separately.
Y92F-49	• Use for E5CSL/E5CWL only. • Provided with E5CSL/E5CWL.
Y92F-51	• Use for E5EWL only. • Provided with E5EWL.

Specifications

Ratings

Power supply voltage		100 to 240 VAC, 50/60 Hz
Operating voltage range		85% to 110% of rated supply voltage
Power consumption		3.5 VA
Sensor input		Models with thermocouple inputs Thermocouple: K, J, T, R, or S
		Models with platinum resistance thermometer inputs Platinum resistance thermometer: Pt100
Control output	**Relay output**	SPST-NO, 250 VAC, 3 A (resistive load), electrical life: 100,000 operations, minimum load: 5 V, 10 mA
	Voltage output (for driving SSR)	Output voltage: 12 VDC +25%/–15% (PNP), max. load current: 21 mA, with short-circuit protection circuit
Alarm output (See note.)		SPST-NO, 250 VAC, 1 A (resistive load), electrical life: 100,000 operations, minimum load: 5 V, 10 mA
Control method		ON/OFF control or 2-PID control (with auto-tuning)
Setting method		Digital setting using front panel keys
Indication method		7-segment digital display and individual indicators Character height: E5CSL: 21.7 mm, E5CWL: 16.2 mm (PV), E5EWL: 20 mm (PV)
Other functions		Temperature input shift, run/stop, protection functions, etc.
Ambient operating temperature		–10 to 55°C (with no icing or condensation)
Ambient operating humidity		25% to 85%
Storage temperature		–25 to 65°C (with no icing or condensation)

Note: E5CWL/E5EWL only

Input Ranges

Models with Thermocouple Inputs

Model (temperature input)	Set value	Input type	Range	
			°C	°F
TC input	0	K	–200 to 1,300	–300 to 2,300
	1		–20.0 to 500.0	0.0 to 900.0
	2	J	–100 to 850	–100 to 1500
	3		–20.0 to 400.0	0.0 to 750.0
	4	T	–200 to 400	–300 to 700
	5		–199.9 to 400.0	–199.9 to 700.0
	6	R	0 to 1,700	0 to 3,000
	7	S	0 to 1,700	0 to 3,000

Default setting: 0
Applicable standards (K, J, T, R, S): JIS C1602-1995 and IEC 60584-1

Models with Resistance Thermometer Inputs

Model (temperature input)	Set value	Input type	Range	
			°C	°F
Pt input	8	Pt100	-200 to 850	-300 to 1500
	9		-199.9 to 500.0	-199.9 to 900.0

Default setting: 8
Applicable standards (Pt100): JIS C1604-1997 and IEC 60751

Alarm Types

Select alarm types out of the 11 alarm types listed in the following table.

Setting	Alarm type	Positive alarm value (X)	Negative alarm value (X)
0	No alarm	Output OFF	
1	Deviation upper/ lower limit	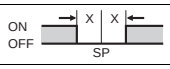	Always ON
2	Deviation upper limit	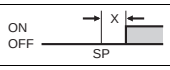	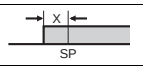
3	Deviation lower limit	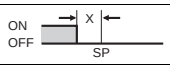	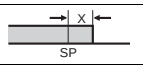
4	Deviation upper/ lower range	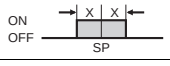	Always OFF
5 (See note.)	Deviation upper/ lower limit standby sequence ON		Always OFF
6 (See note.)	Deviation upper limit standby sequence ON	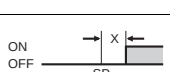	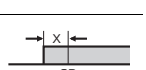
7 (See note.)	Deviation lower limit standby sequence ON	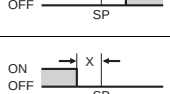	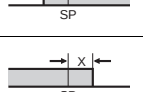
8	Absolute value upper limit	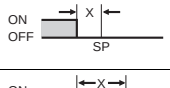	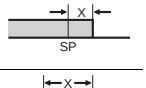
9	Absolute value lower limit	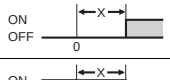	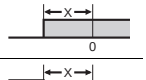
10 (See note.)	Absolute value upper limit standby sequence ON	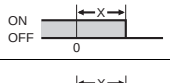	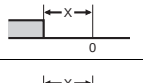
11 (See note.)	Absolute value lower limit standby sequence ON	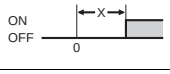	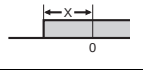
12	Do not set.		

Note: Alarms with a Standby Sequence
The alarm is blocked until the first safe-state is reached.
Unwanted alarm during start-up are prevented.
Example: Deviation Lower Limit Standby Sequence ON

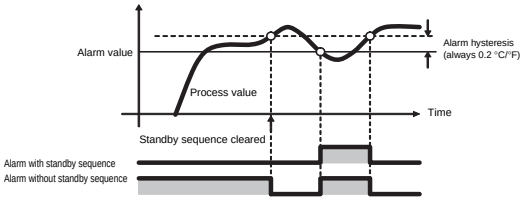

The standby sequence is cleared when the alarm OFF condition has been met.
The standby sequence is started again when any of the following conditions is met.

- Operation is started (power is turned ON or operation is switched from stop to run).
- The alarm value is changed.
- The temperature input offset is changed.
- The set point is changed.

Characteristics

Indication accuracy		Thermocouple: (See note 1.) (±0.5% of indicated value or ±1°C, whichever is greater) ±1 digit max. Platinum resistance thermometer: (±0.5% of indicated value or ±1°C, whichever is greater) ±1 digit max.
Influence of temperature		R and S thermocouple inputs: (±1% of PV or ±10°C, whichever is greater) ±1 digit max. K, J, and T thermocouple inputs: (±1% of PV or ±4°C, whichever is greater) ±1 digit max. Platinum resistance thermometer inputs: (±1% of PV or ±2°C, whichever is greater) ±1 digit max.
Influence of voltage		
Influence of EMS. (at EN61326-1)		
Hysteresis		0.1 to 999.9 (in units of 0.1) °C/°F
Proportional band (P)		0.1 to 999.9 (in units of 0.1) °C/°F
Integral time (I)		0 to 3999 s (in units of 1 s)
Derivative time (D)		0 to 3999 s (in units of 1 s)
Control period		0.5, 1 to 99 s (in units of 1 s)
Alarm setting range		−1999 to 9999 (decimal point position depends on input type)
Sampling period		250 ms
Affect of signal source resistance		Thermocouple: 0.1°C/Ω max. (100 Ω max.) (See note 2.) Platinum resistance thermometer: 0.6°C/Ω max. (10 Ω max.)
Insulation resistance		20 MΩ min. (at 500 VDC)
Dielectric strength		2,300 VAC, 50 or 60 Hz for 1 min (between terminals with different charge)
Vibration resistance	**Malfunction**	10 to 55 Hz, 20 m/s^2 for 10 min each in X, Y, and Z directions
	Destruction	10 to 55 Hz, 20 m/s^2 for 2 hrs each in X, Y, and Z directions
Shock resistance	**Malfunction**	100 m/s^2 min., 3 times each in X, Y, and Z directions
	Destruction	300 m/s^2 min., 3 times each in X, Y, and Z directions
Weight	**E5CSL/E5CWL**	Controller: Approx. 100 g, Mounting Bracket: Approx. 10 g
	E5EWL	Controller: Approx. 150 g, Mounting Bracket: Approx. 10 g
Degree of protection		Front panel: IP50 Rear case: IP20, Terminals: IP00
Memory protection		Non-volatile memory (number of writes: 100,000 times)
Conformed standards		EN61326-1 (See note 3.), EN61010-1, IEC61010-1 VDE0106 Part 100 (Finger protection), when the terminal cover is mounted.
EMC		Emission Enclosure: EN55011 Group1 Class A Emission AC Mains: EN55011 Group1 Class A Immunity ESD: EN61000-4-2 Immunity RF-interference: EN61000-4-3 10 V/m Immunity Conducted Disturbance: EN61000-4-6 3 V Immunity Burst: EN61000-4-4 Immunity Surge: EN61000-4-5 Immunity Voltage Dip/Interrupting: EN61000-4-11

Note: 1. The indication accuracy of K and T thermocouples at a temperature of −100°C max. is ±2°C ±1 digit maximum. The indication accuracy of the R and S thermocouples at a temperature of 200°C max. is ±3°C ±1 digit max.
2. R, and S sensors: 0.2°C/Ω max. (100 Ω max.)
3. Industrial electromagnetic environment (EN/IEC 61326-1 Table 2)

Electrical Life Expectancy Curve for Relays (Reference Values)

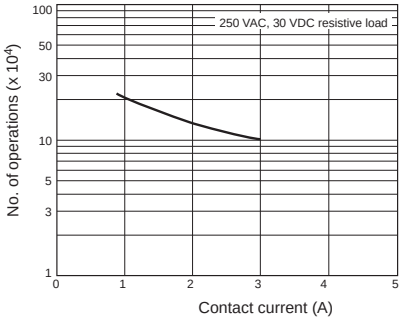

External Connections

- A voltage output (control output) is not electrically insulated from the internal circuits. When using a grounding thermocouple, do not connect any of the control output terminals to ground. If the control output terminals are connected to ground, errors will occur in the measured temperature values as a result of leakage current.

E5CSL

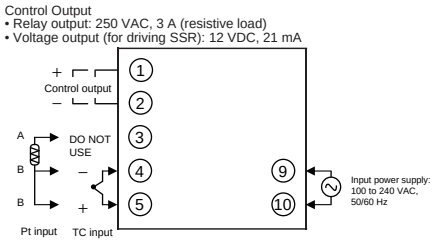

E5CWL

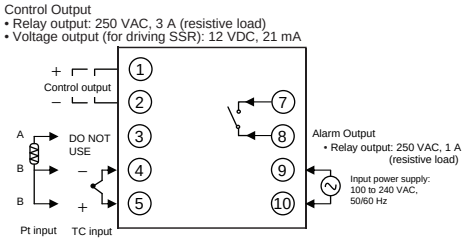

E5EWL

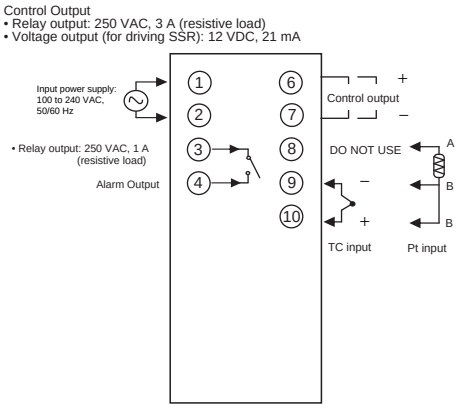

Nomenclature

E5CSL

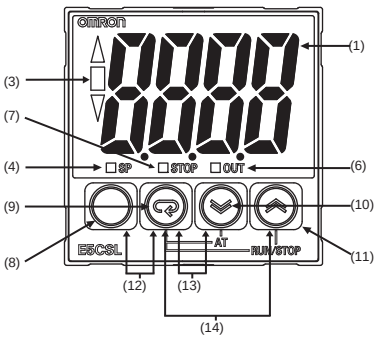

E5CWL

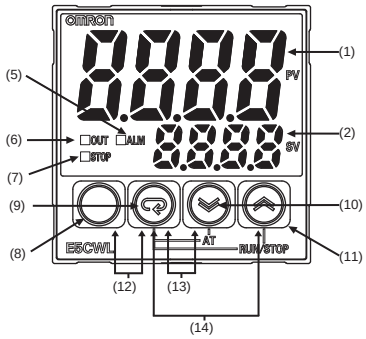

E5EWL

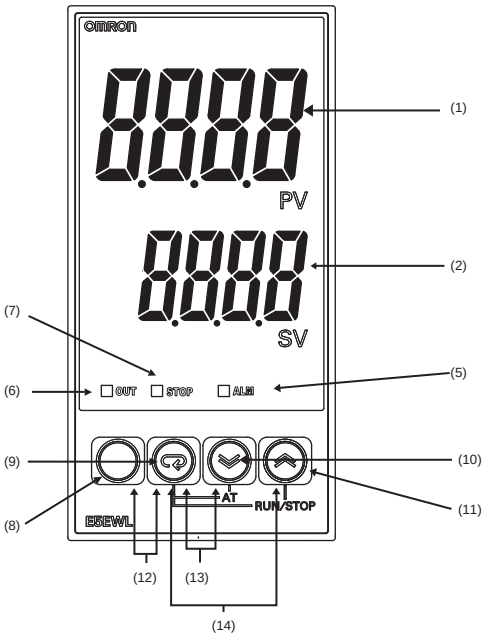

(1) Display No. 1	Displays the process value (PV) or parameter. For the E5CSL/E5EWL, the set point or parameter setting is also displayed.
(2) Display No. 2	Displays the set point (SP) or parameter setting.
(3) Deviation Indicators	Show the relation between the process value and the set point. ▲Lit: The process value is more than 5°C/°F higher than the set point. ▼Lit: The process value is more than 5°C/°F lower than the set point. ■Lit: The process value is within 5°C/°F of the set point. The relevant deviation indicator will flash during autotuning.
(4) SP	Lit while the set point is displayed on display No. 1 (E5CSL only).
(5) ALM	Lit while the alarm is ON. Not lit while the alarm is OFF.
(6) OUT	Lit while the control output is ON. Not lit while the control output is OFF.
(7) STOP	Not lit during operation. Lit while operation is stopped.
(8)	Level Key: Changes the setting level.
(9)	Mode Key: Changes the parameter within the setting level.
(10)	Down Key: Reduces the setting.
(11)	Up Key: Increases the setting.
(12) +	Press these keys for at least 3 seconds in Operation Level or Adjustment Level to go to Protect Level. Press these keys for at least 1 second in Protect Level to return to Operation Level.
(13) +	Press these keys for at least 2 seconds to start or stop autotuning.*1
(14) +	Press these keys for at least 2 seconds to start or stop operation.*2

*1: These keys are disabled when starting and stopping autotuning has been disabled with operation control key protection.
*2: These keys are disabled when starting and stopping operation has been disabled with operation control key protection.

E5CSL/E5CWL/E5EWL

Dimensions

(Unit: mm)

E5CSL/E5CWL

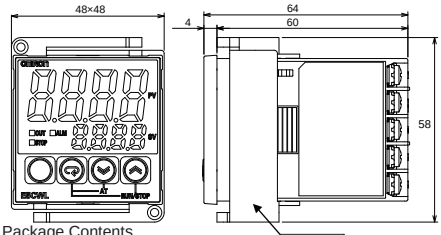

Package Contents
- Temperature Controller
- Adapter
- Instruction Manual

*The dimensions are the same for the E5CSL.

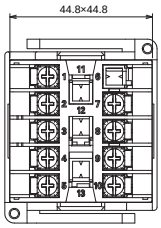

- Solderless terminal size: M3.5
- Terminal Cover: E53-COV19 (sold separately)
- Front Panel: E53-COV20 (sold separately)

Panel Cutout

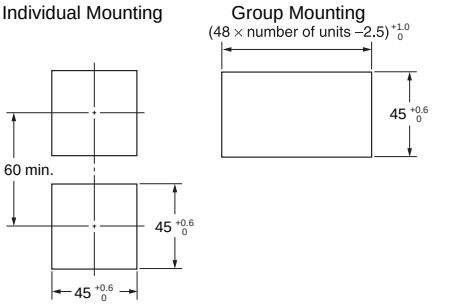

- Recommended panel thickness is 1 to 5 mm.
- Group mounting is not possible in the vertical direction. (Maintain the specified mounting space between Controllers.)
- When two or more Controllers are mounted, make sure that the surrounding temperature does not exceed the ambient operating temperature given in the specifications.

E5EWL

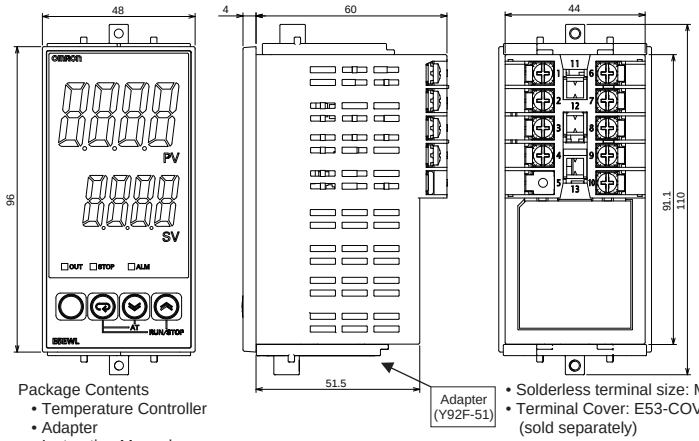

Package Contents
- Temperature Controller
- Adapter
- Instruction Manual

- Solderless terminal size: M3.5
- Terminal Cover: E53-COV19 (sold separately)

Panel Cutout

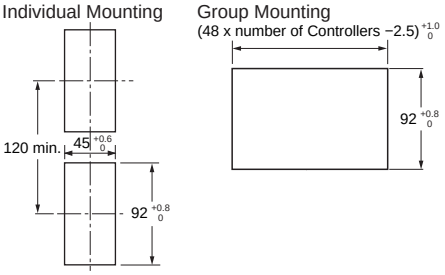

- Recommended panel thickness is 1 to 5 mm.
- Group mounting is not possible in the vertical direction. (Maintain the specified mounting space between Controllers.)
- Balance the two mounting screws on the upper and lower parts of the adapter and tighten them with a torque of 0.2 N·m (recommended value). Excessive screw tightening torque may damage the product.
- When two or more Controllers are mounted, make sure that the surrounding temperature does not exceed the ambient operating temperature given in the specifications.

Accessories (Order Separately)

Terminal Cover

E53-COV19

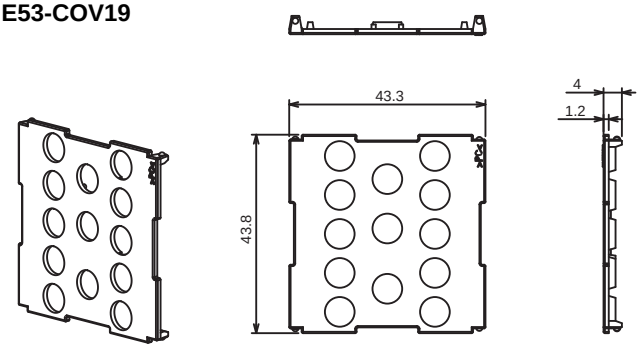

Note: The E53-COV10 cannot be used.

Front Panel (For E5CSL/E5CWL)

E53-COV20

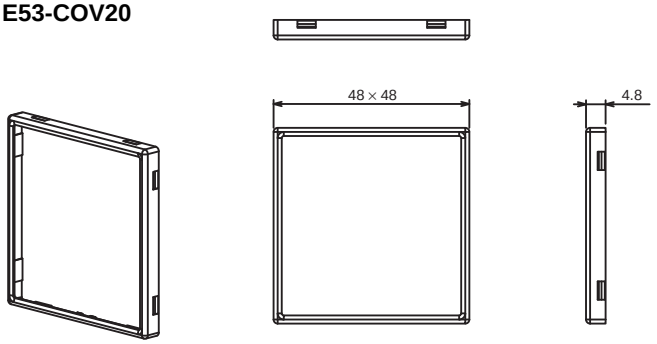

Note: 1. This Front Panel accessory is required to attach the Y92A-48B or Y92A-48D.
2. This Front Panel accessory is only the frame. It does not include the plastic cover.

Adapter (For E5CSL/E5CWL)

Note: 1. Use this Adapter when the panel has already been prepared for the E5B□.
2. Only black is available.

Y92F-45

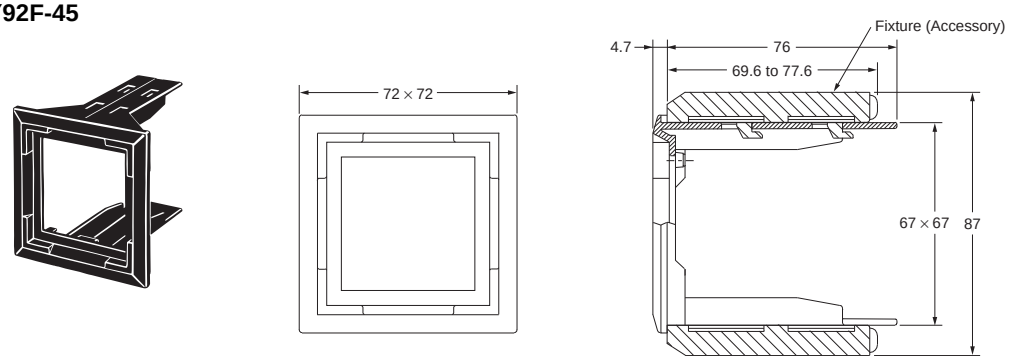

Mounted to E5CWL

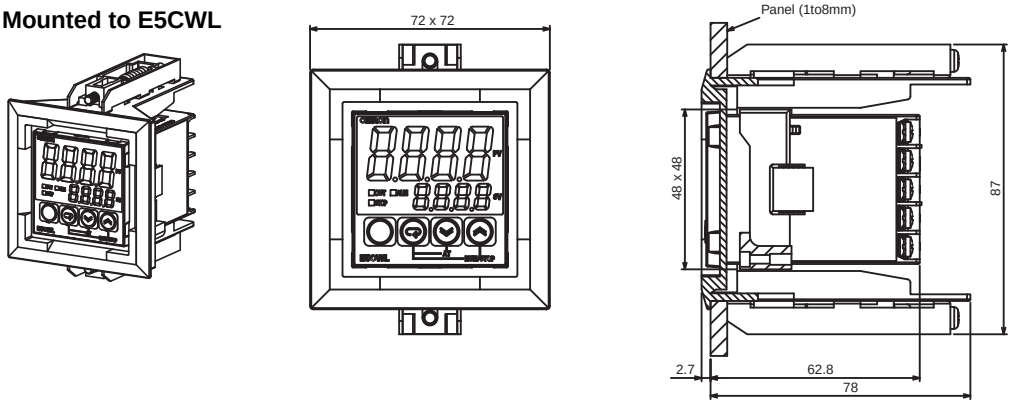

Operation

Parameter Operations

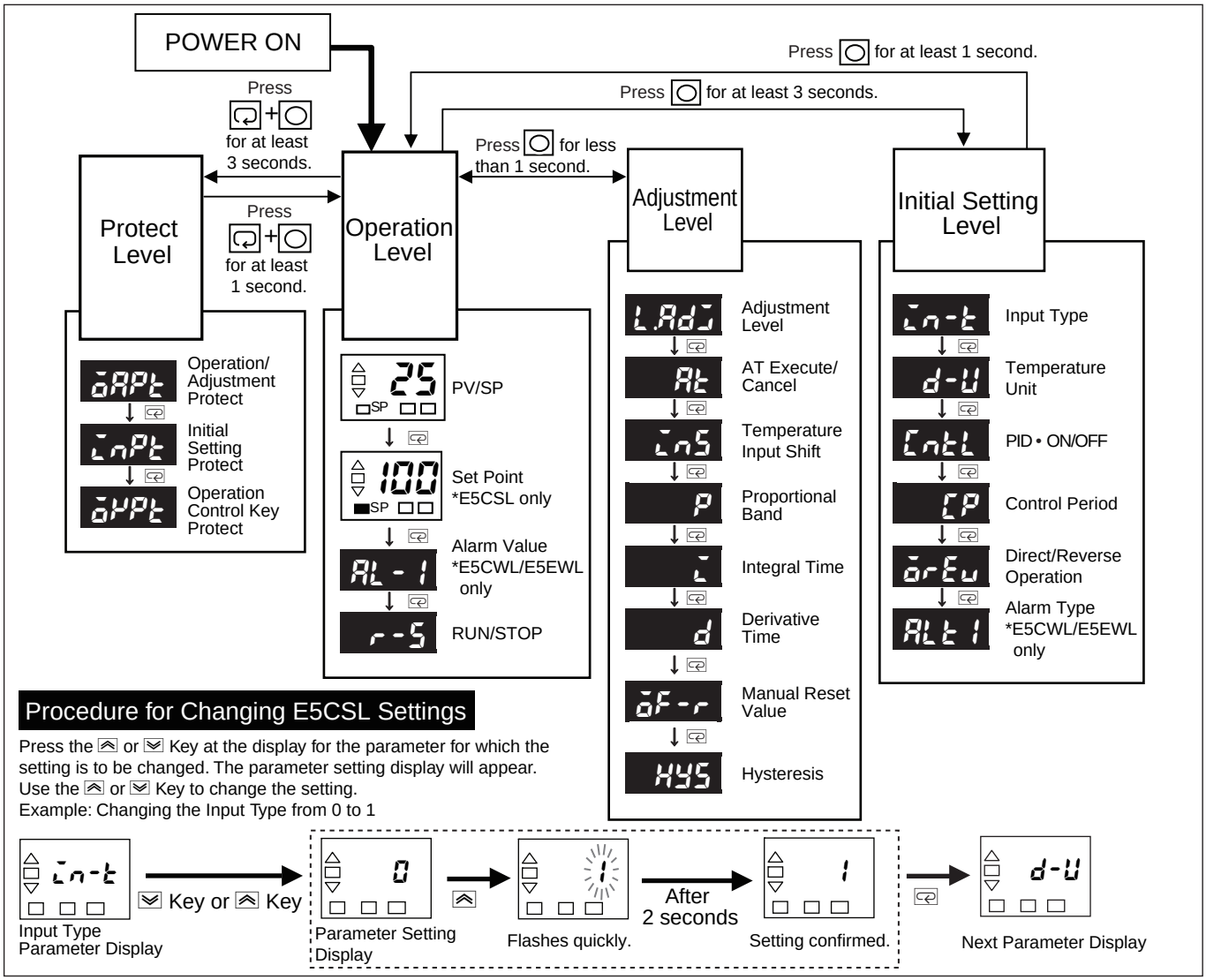

Safety Precautions

⚠ CAUTION	
Do not touch the terminals while power is being supplied. Doing so may occasionally result in minor injury due to electric shock.	
Do not allow pieces of metal, wire clippings, or fine metallic shavings or filings from installation to enter the product. Doing so may occasionally result in electric shock, fire, or malfunction.	
Do not use the product where subject to flammable or explosive gas. Otherwise, minor injury from explosion may occasionally occur.	
Never disassemble, modify, or repair the product or touch any of the internal parts. Minor electric shock, fire, or malfunction may occasionally occur.	
If the output relays are used past their life expectancy, contact fusing or burning may occasionally occur. Always consider the application conditions and use the output relays within their rated load and electrical life expectancy. The life expectancy of output relays varies considerably with the output load and switching conditions.	
Tighten the terminal screws to between 0.74 and 0.90 N·m. Loose screws may occasionally result in fire.	
Set the parameters of the product so that they are suitable for the system being controlled. If they are not suitable, unexpected operation may occasionally result in property damage or accidents.	
A malfunction in the Temperature Controller may occasionally make control operations impossible or prevent alarm outputs, resulting in property damage. To maintain safety in the event of malfunction of the Temperature Controller, take appropriate safety measures, such as installing a monitoring device on a separate line.	

Precautions for Safe Use

Be sure to observe the following precautions to prevent operation failure, malfunction, or adverse affects on the performance and functions of the product. Not doing so may occasionally result in unexpected events.

1. The product is designed for indoor use only. Do not use the product outdoors or in any of the following locations.
   - Places directly subject to heat radiated from heating equipment.
   - Places subject to splashing liquid or oil atmosphere.
   - Places subject to direct sunlight.
   - Places subject to dust or corrosive gas (in particular, sulfide gas and ammonia gas).
   - Places subject to intense temperature change.
   - Places subject to icing and condensation.
   - Places subject to vibration and large shocks.
2. Use/store within the rated temperature and humidity ranges. Provide forced-cooling if required.
3. To allow heat to escape, do not block the area around the product. Do not block the ventilation holes on the product.
4. Be sure to wire properly with correct polarity of terminals.
5. Use specified size (M3.5, width 7.2 mm or less) crimped terminals for wiring. To connect bare wires to the terminal block, use copper braided or solid wires with a rated temperature of over 70°C and a gauge of AWG24 to AWG14 (equal to a cross-sectional area of 0.205 to 2.081 mm^2). (The stripping length is 5 to 6 mm.) Up to two wires of same size and type, or two crimped terminals can be inserted into a single terminal.
6. Do not wire the terminals which are not used.
7. Allow as much space as possible between the controller and devices that generate a powerful high-frequency or surge. Separate the high-voltage or large-current power lines from other lines, and avoid parallel or common wiring with the power lines when you are wiring to the terminals.
8. Use this product within the rated load and power supply.
9. Make sure that the rated voltage is attained within two seconds of turning ON the power using a switch or relay contact. If the voltage is applied gradually, the power may not be reset or output malfunctions may occur.
10. Make sure that the Controller has 30 minutes or more to warm up after turning ON the power before starting actual control operations to ensure the correct temperature display.
11. A switch or circuit breaker should be provided close to this unit. The switch or circuit breaker should be within easy reach of the operator, and must be marked as a disconnecting means for this unit.
12. Do not use paint thinner or similar chemical to clean with. Use standard grade alcohol.
13. Design system (control panel, etc) considering the 2 seconds of delay that the controller's output to be set after power ON.
14. The output may turn OFF when shifting to certain levels. Take this into consideration when performing control.
15. The number of non-volatile memory write operations is limited.

Precautions for Correct Use

Service Life

1. Use the product within the following temperature and humidity ranges:
   Temperature: –10 to 55°C (with no icing or condensation)
   Humidity: 25% to 85%
   If the product is installed inside a control board, the ambient temperature must be kept to under 55°C, including the temperature around the product.
2. The service life of electronic devices like Temperature Controllers is determined not only by the number of times the relay is switched but also by the service life of internal electronic components. Component service life is affected by the ambient temperature: the higher the temperature, the shorter the service life and, the lower the temperature, the longer the service life. Therefore, the service life can be extended by lowering the temperature of the Temperature Controller.
3. When two or more Temperature Controllers are mounted horizontally close to each other or vertically next to one another, the internal temperature will increase due to heat radiated by the Temperature Controllers and the service life will decrease. In such a case, use forced cooling by fans or other means of air ventilation to cool down the Temperature Controllers. When providing forced cooling, however, be careful not to cool down the terminals sections alone to avoid measurement errors.

Measurement Accuracy

1. When extending or connecting the thermocouple lead wire, be sure to use compensating wires that match the thermocouple types.
2. When extending or connecting the lead wire of the platinum resistance thermometer, be sure to use wires that have low resistance and keep the resistance of the three lead wires the same.
3. Mount the product so that it is horizontally level.
4. If the measurement accuracy is low, check to see if input shift has been set correctly.

Waterproofing

The degree of protection is as shown below. Sections without any specification on their degree of protection or those with IP□0 are not waterproof.

Front panel: IP50
Rear case: IP20, Terminal section: IP00

Operating Precautions

1. It takes approximately two seconds for the outputs to turn ON from after the power supply is turned ON. Due consideration must be given to this time when incorporating Temperature Controllers in a sequence circuit.
2. When starting operation after the Temperature Controller has warmed up, turn OFF the power and then turn it ON again at the same time as turning ON power for the load. (Instead of turning the Temperature Controller OFF and ON again, switching from STOP mode to RUN mode can also be used.)
3. Avoid using the Controller in places near a radio, television set, or wireless installing. These devices can cause radio disturbances which adversely affect the performance of the Controller.

Mounting

Mounting to a Panel

E5CSL/E5CWL

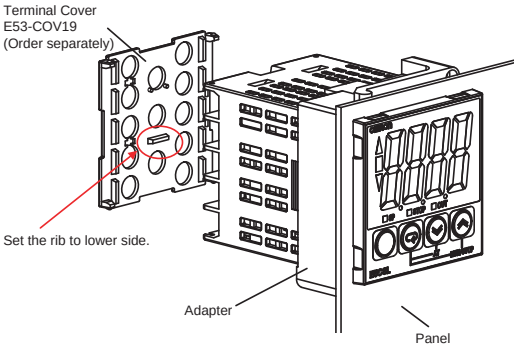

1. Insert the E5CSL/E5CWL into the mounting hole in the panel.
2. Push the adapter from the terminals up to the panel, and temporarily fasten the E5CSL/E5CWL.
3. Tighten the two fastening screws on the adapter. Alternately tighten the two screws little by little to maintain a balance. Tighten the screws to a torque of 0.29 to 0.39 N·m.

E5EWL

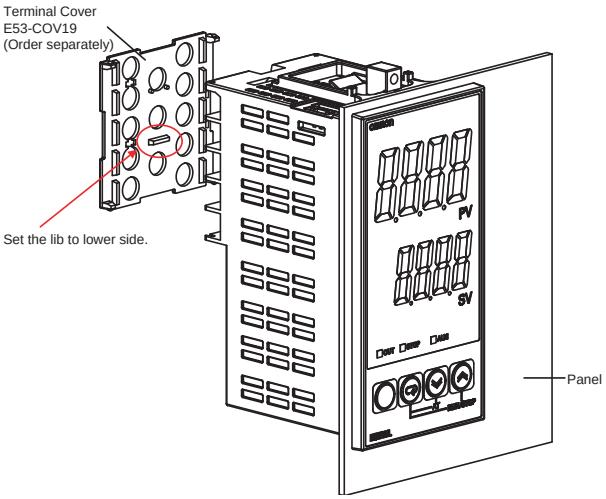

1. Insert the E5EWL into the mounting hole in the panel.
2. Attach the adapter provided with the product to the mounting grooves on the top and bottom surfaces of the rear case.
3. Push until adapter reaches the panel and is fixed in place.

Mounting the Terminal Cover

Make sure that the rib on the E53-COV19 Terminal Cover to lower side, and then attach the this cover to E5CSL/E5CWL/E5EWL.

Precautions when Wiring

- Separate input leads and power lines in order to prevent external noise.
- Use specified size (M3.5, width 7.2 mm or less) crimped terminals for wiring. To connect bare wires to the terminal block, use copper braided or solid wires with a rated temperature of over 70°C and a gauge of AWG24 to AWG14 (equal to a cross-sectional area of 0.205 to 2.081 mm^2). (The stripping length is 5 to 6 mm.) Up to two wires of same size and type, or two crimped terminals can be inserted into a single terminal.
- Use crimp terminals when wiring the terminals.
- Use the suitable wiring material and crimp tools for crimp terminals.
- Tighten the terminal screws to between 0.74 and 0.90 N·Em.
- Use the following types of crimp terminals for M3.5 screws.

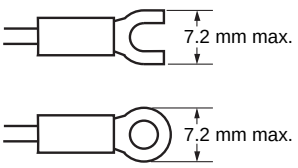

Warranty and Application Considerations

Read and Understand This Catalog

Please read and understand this catalog before purchasing the products. Please consult your OMRON representative if you have any questions or comments.

Warranty and Limitations of Liability

WARRANTY

OMRON's exclusive warranty is that the products are free from defects in materials and workmanship for a period of one year (or other period if specified) from date of sale by OMRON.

OMRON MAKES NO WARRANTY OR REPRESENTATION, EXPRESS OR IMPLIED, REGARDING NON-INFRINGEMENT, MERCHANTABILITY, OR FITNESS FOR PARTICULAR PURPOSE OF THE PRODUCTS. ANY BUYER OR USER ACKNOWLEDGES THAT THE BUYER OR USER ALONE HAS DETERMINED THAT THE PRODUCTS WILL SUITABLY MEET THE REQUIREMENTS OF THEIR INTENDED USE. OMRON DISCLAIMS ALL OTHER WARRANTIES, EXPRESS OR IMPLIED.

LIMITATIONS OF LIABILITY

OMRON SHALL NOT BE RESPONSIBLE FOR SPECIAL, INDIRECT, OR CONSEQUENTIAL DAMAGES, LOSS OF PROFITS, OR COMMERCIAL LOSS IN ANY WAY CONNECTED WITH THE PRODUCTS, WHETHER SUCH CLAIM IS BASED ON CONTRACT, WARRANTY, NEGLIGENCE, OR STRICT LIABILITY.

In no event shall the responsibility of OMRON for any act exceed the individual price of the product on which liability is asserted.

IN NO EVENT SHALL OMRON BE RESPONSIBLE FOR WARRANTY, REPAIR, OR OTHER CLAIMS REGARDING THE PRODUCTS UNLESS OMRON'S ANALYSIS CONFIRMS THAT THE PRODUCTS WERE PROPERLY HANDLED, STORED, INSTALLED, AND MAINTAINED AND NOT SUBJECT TO CONTAMINATION, ABUSE, MISUSE, OR INAPPROPRIATE MODIFICATION OR REPAIR.

Application Considerations

SUITABILITY FOR USE

OMRON shall not be responsible for conformity with any standards, codes, or regulations that apply to the combination of products in the customer's application or use of the products.

Take all necessary steps to determine the suitability of the product for the systems, machines, and equipment with which it will be used.

Know and observe all prohibitions of use applicable to this product.

NEVER USE THE PRODUCTS FOR AN APPLICATION INVOLVING SERIOUS RISK TO LIFE OR PROPERTY WITHOUT ENSURING THAT THE SYSTEM AS A WHOLE HAS BEEN DESIGNED TO ADDRESS THE RISKS, AND THAT THE OMRON PRODUCTS ARE PROPERLY RATED AND INSTALLED FOR THE INTENDED USE WITHIN THE OVERALL EQUIPMENT OR SYSTEM.

Disclaimers

PERFORMANCE DATA

Performance data given in this catalog is provided as a guide for the user in determining suitability and does not constitute a warranty. It may represent the result of OMRON's test conditions, and the users must correlate it to actual application requirements. Actual performance is subject to the OMRON *Warranty and Limitations of Liability.*

CHANGE IN SPECIFICATIONS

Product specifications and accessories may be changed at any time based on improvements and other reasons. Consult with your OMRON representative at any time to confirm actual specifications of purchased product.

DIMENSIONS AND WEIGHTS

Dimensions and weights are nominal and are not to be used for manufacturing purposes, even when tolerances are shown.

Note: Do not use this document to operate the Unit.

OMRON Corporation **Industrial Automation Company**

Kyoto, JAPAN **Contact : www.ia.omron.com**

Regional Headquarters

OMRON EUROPE B.V.
Wegalaan 67-69, 2132 JD Hoofddorp
The Netherlands
Tel: (31) 2356-81-300 Fax: (31) 2356-81-388

OMRON ELECTRONICS LLC
2895 Greenspoint Parkway, Suite 200
Hoffman Estates, IL 60169 U.S.A.
Tel: (1) 847-843-7900 Fax: (1) 847-843-7787

OMRON ASIA PACIFIC PTE. LTD.
438B Alexandra Road, #08-01/02 Alexandra
Technopark, Singapore 119968
Tel: (65) 6835-3011 Fax: (65) 6835-3011

OMRON (CHINA) CO., LTD.
Room 2211, Bank of China Tower,
200 Yin Cheng Zhong Road,
PuDong New Area, Shanghai, 200120, China
Tel: (86) 21-6023-0333 Fax: (86) 21-5037-2388

Authorized Distributor:

©OMRON Corporation 2010-2023 All Rights Reserved.
In the interest of product improvement,
specifications are subject to change without notice.

CSM_1_4
Cat. No. H167-E1-03 0823 (0811)