Simple Fiber Amplifier Unit

E3X-SD/-NA

Simple and Affordable Fiber Amplifier Units

- **Reasonable price.**
- **Use the one-key one-function feature for quick, easy operation.**



For the most recent information on models that have been certified for safety standards, refer to your OMRON website.

Ordering Information

Fiber Amplifier Units [Refer to *Dimensions* on page *11*.]

Digital Display and Direct Key Setting

Item	Appearance	Connection method	Ratings and Specifications	Model	
				NPN output	PNP output
Standard models		Pre-wired (2 m)	---	**E3X-SD21 2M**	**E3X-SD51 2M**
		Wire-saving connector *		**E3X-SD7**	**E3X-SD9**

*An Amplifier Unit Connector (sold separately) is required.

Bar Display and Adjuster Setting

Item	Appearance	Connection method	Ratings and Specifications	Model	
				NPN output	PNP output
Standard models		Pre-wired (2 m)	---	**E3X-NA11 2M**	**E3X-NA41 2M**
		Wire-saving connector *1		**E3X-NA6**	**E3X-NA8**
High-speed detection models		Pre-wired (2 m)	Response time: 20 µs	**E3X-NA11F 2M**	**E3X-NA41F 2M**
Water-resistant models		Pre-wired (2 m)	Degree of protection: IP66	**E3X-NA11V 2M**	**E3X-NA41V 2M**
		Connector (M8) *2		**E3X-NA14V**	**E3X-NA44V**

*1. An Amplifier Unit Connector (sold separately) is required.
*2. A Sensor I/O Connector (sold separately) is required.

Accessories (sold separately)

Amplifier Unit Connectors (Required for models for Wire-saving Connectors.)

Note: Protective seals provided. **[Refer to *Dimensions* on page *15*.]**

Item	Appearance	Cable length	No. of conductors	Model
Master Connector		2 m	3	**E3X-CN11**
Slave Connector			1	**E3X-CN12**

Ordering Precautions for Amplifier Units Connectors

A Connector is not provided with the Amplifier Unit. Refer to the tables at the right when placing an order.

Fiber Amplifier Units		
Type	**NPN**	**PNP**
Standard models	E3X-SD7	E3X-SD9
	E3X-NA6	E3X-NA8

\+

Applicable Connectors (sold separately)	
Master Connector	**Slave Connector**
E3X-CN11 (3-wire)	E3X-CN12 (1-wire)

When Using 5 Amplifier Units

5 Fiber Amplifier Units + 1 Master Connector + 4 Slave Connectors

Sensor I/O Connectors (Required for models with M8 Connectors.)

[Refer to *Dimensions* on *XS3*.]

Size	Cable specifications	Appearance	Cable type		Model
M8	Standard cable	Straight connector 	2 m	Four-conductor cable	**XS3F-M421-402-A**
			5 m		**XS3F-M421-405-A**
		L-shaped connector 	2 m		**XS3F-M422-402-A**
			5 m		**XS3F-M422-405-A**

Mounting Brackets

A Mounting Bracket is not provided with the Fiber Amplifier Unit. Order a Mounting Bracket separately if required.

[Refer to *Dimensions* on page *15*.]

Appearance	Applicable models	Model	Quantity
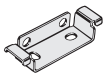	E3X-SD□ E3X-NA□ E3X-NA□F	**E39-L143**	1
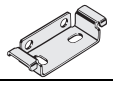	E3X-NA□V	**E39-L148**	

End Plate

End Plates are not provided with the Fiber Amplifier Unit. Order End Plates separately if required.

[Refer to *Dimensions* on page *15*.]

Appearance	Model	Quantity
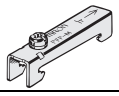	**PFP-M**	1

Ratings and Specifications

Fiber Amplifier Units

Item \ Type	Digital display and direct key setting	Bar display and adjuster setting		
	Standard models	Standard models	High-speed detection models	Water-resistant models
Model	E3X-SD□	E3X-NA□	E3X-NA□F	E3X-NA□V
Light source (wavelength)	Red, 4-element LED (625 nm)	Red, 4-element LED (624 nm)	Red, 4-element LED (625 nm)	Red LED (680 nm)
Power supply voltage	12 to 24 VDC ±10%, ripple (p-p): 10% max.			
Power consumption/ Current consumption	At Power Supply Voltage of 24 VDC 960 mW max./40 mA max. At Power Supply Voltage of 12 VDC 960 mW max./80 mA max.	At Power Supply Voltage of 24 VDC 840 mW max./35 mA max. At Power Supply Voltage of 12 VDC 420 mW max./35 mA max.		
Control output	Open-collector output (NPN or PNP) Load power supply: 26.4 V max., Load current: 50 mA max. (Residual voltage: 1.5 V max.) Light-ON/Dark-ON mode selector	Open-collector output (NPN or PNP) Load power supply: 26.4 V max., Load current: 50 mA max. (Residual voltage: 1 V max.) Light-ON/Dark-ON mode selector.		
Response time	Operate or reset: 200 µs max. (*1)		Operate: 20 µs max. Reset: 30 µs max.	Operate or reset: 200 µs max. (*1)
Sensitivity adjustment	UP/DOWN direct key setting, teaching with/without a workpiece, automatic teaching	8-turn sensitivity adjuster (with indicator)		
Protection circuits	Power supply reverse polarity protection, output short-circuit protection, output reverse polarity protection	Power supply reverse polarity protection, output short-circuit protection		
Timer function	---	No timer, OFF-delay timer; or Timer selector (timer time: 40 ms (fixed))		
Mutual interference prevention	Up to 5 Amplifiers (optically synchronized) (*2)		None	Up to 5 Amplifiers (optically synchronized) (*2)
Ambient illumination	Receiver side Incandescent lamp: 10,000 lux max. Sunlight: 20,000 lux max.			
Number of gang-mounted Amplifiers	16 max. (The ambient temperature specification depends on the number of gang-mounted Amplifiers.)			
Ambient temperature range	Operating: Groups of 1 to 3 Amplifiers: –25°C to 55°C Groups of 4 to 11 Amplifiers: –25°C to 50°C Groups of 12 to 16 Amplifiers: –25°C to 45°C Storage: –30°C to 70°C (with no icing or condensation)			
Ambient humidity range	Operating and storage: 35% to 85% (with no condensation)	Operating: 35% to 85% Storage: 35% to 95% (with no condensation)		
Insulation resistance	20 MΩ. min. (at 500 VDC)			
Dielectric strength	1,000 VAC at 50/60 Hz for 1 minute (*3)			
Vibration resistance	Destruction: 10 to 55 Hz with a 1.5-mm double amplitude for 2 hours each in X, Y and Z directions			
Shock resistance	Destruction: 500 m/s^2, for 3 times each in X, Y and Z directions			
Degree of protection	IEC 60529 IP50 (with Protective Cover attached)			IEC 60529 IP66 (with Protective Cover attached)
Connection method	Pre-wired (standard cable length: 2 m), or connector			
Weight (packed state) (*4)	Pre-wired model: Approx. 100 g, Model with connector: Approx. 55 g			
Material – **Case**	Polybutylene terephthalate (PBT)			
Material – **Cover**	Polycarbonate (PC)			Polyethersulfone (PES)
Accessories	Instruction manual			

***1.** When there are 8 or more E3X-NA Amplifiers mounted side-by-side, the response time will be 350 µs max.
***2.** Mutual interference prevention is effective when E3X-SD/-NA-series Fiber Amplifier Units are gang-mounted without other E3X-series Fiber Amplifier Units.
***3.** Water-resistant models and models with connectors have a dielectric strength of 500 VAC.
***4.** Add 10 g for water-resistant models.

Amplifier Unit Connectors (Wire-saving Connectors)

Item \ Model	E3X-CN11	E3X-CN12
Rated current	2.5 A	
Rated voltage	50 V	
Contact resistance	20 mΩ max. (20 mVDC max., 100 mA max.) (The above figure is for connection to the Fiber Amplifier Unit and the adjacent Connector. It does not include the conductor resistance of the cable.)	
Number of insertions	Destruction: 50 times (for connection to the Fiber Amplifier Unit and the adjacent Connector)	
Material – **Housing**	Polybutylene terephthalate (PBT)	
Material – **Contact**	Phosphor bronze/gold-plated nickel	
Weight (packed state)	Approx. 55 g	Approx. 25 g

Sensing distance

Threaded Models

Detection method	Sensing direction	Size	Model	Sensing distance (mm)		
				E3X-SD□ E3X-NA□	E3X-NA□F	E3X-NA□V
Through-beam	Right-angle	M4	E32-T11N 2M	530	160	280
			E32-LT11N 2M	1,800	600	900
	Straight		E32-T11R 2M	560	160	280
			E32-LT11 2M	2,100	700	1,050
			E32-LT11R 2M	1,800	600	900
Reflective	Right-angle	M3	E32-C31N 2M	25	7.5	13
			E32-C21N 2M	65	21	32
		M4	E32-D21N 2M	170	56	85
		M6	E32-C11N 2M	170	50	85
			E32-LD11N 2M	170	56	85
	Straight	M3	E32-D21R 2M	30	10	15
			E32-C31 2M	80	26	40
			E32-C31M 1M			
		M4	E32-D211R 2M	30	10	15
		M6	E32-D11R 2M	180	60	90
			E32-CC200 2M	300	100	150
			E32-LD11 2M	180	60	90
			E32-LD11R 2M	170	56	85

Cylindrical Models

Detection method	Size	Sensing direction	Model	Sensing distance (mm)		
				E3X-SD□ E3X-NA□	E3X-NA□F	E3X-NA□V
Through-beam	1 dia.	Top-view	E32-T223R 2M	120	36	60
	1.5 dia.		E32-T22B 2M	200	60	100
	3 dia.		E32-T12R 2M	560	160	280
		Side-view	E32-T14LR 2M	220	66	110
Reflective	1.5 dia.	Top-view	E32-D22B 2M	30	10	15
	1.5 dia. + 0.5 dia.		E32-D43M 1M	6	2	3
	3 dia.		E32-D22R 2M	30	10	15
			E32-D221B 2M	70	20	35
			E32-D32L 2M	160	50	80
	3 dia. + 0.8 dia.		E32-D33 2M	16	4	10

Flat Models

Detection method	Sensing direction	Model	Sensing distance (mm)		
			E3X-SD□ E3X-NA□	E3X-NA□F	E3X-NA□V
Through-beam	Top-view	E32-T15XR 2M	560	160	280
	Side-view	E32-T15YR 2M	220	66	110
	Flat-view	E32-T15ZR 2M			
Reflective	Top-view	E32-D15XR 2M	180	60	90
	Side-view	E32-D15YR 2M	40	10	20
	Flat-view	E32-D15ZR 2M			

Sleeve Models

Detection method	Sensing direction	Model	Sensing distance (mm)		
			E3X-SD□ E3X-NA□	E3X-NA□F	E3X-NA□V
Through-beam	Side-view	E32-T24R 2M	60	18	30
		E32-T24E 2M	180	36	60
	Top-view	E32-T21-S1 2M	130	43	65
		E32-T33 1M	40	13.5	20
		E32-TC200BR 2M	560	160	280
Reflective	Side-view	E32-D24R 2M	14	4.6	7
		E32-D24-S2 2M	26	8	13
	Top-view	E32-D43M 1M	6	2	3
		E32-D331 2M	3	1	1.5
		E32-D33 2M	16	4	10
		E32-D32-S1 0.5M	14	4	7
		E32-D31-S1 0.5M			
		E32-DC200F4R 2M	30	10	15
		E32-D22-S1 2M	57	19	28
		E32-D21-S3 2M			
		E32-DC200BR 2M	180	60	90
		E32-D25-S3 2M	57	19	28

Small-spot, Reflective

Type	Spot diameter	Center distance (mm)	Model	Sensing distance (mm)		
				E3X-SD□ E3X-NA□	E3X-NA□F	E3X-NA□V
Variable spot	0.1 to 0.6 dia.	6 to 15	E32-C42 1M + E39-F3A	Spot diameter of 0.1 to 0.6 mm at 6 to 15 mm.		
	0.3 to 1.6 dia.	10 to 30	E32-C42 1M + E39-F17	Spot diameter of 0.3 to 1.6 mm at 10 to 30 mm.		
Parallel light	4 dia.	0 to 20	E32-C31 2M + E39-F3C	Spot diameter of 4 mm max. at 0 to 20 mm.		
			E32-C31N 2M + E39-F3C			
Integrated lens	0.1 dia.	5	E32-C42S 1M	Spot diameter of 0.1 mm at 5 mm.		
	6 dia.	50	E32-L15 2M	Spot diameter of 6 mm at 50 mm.		
Small-spot	0.1 dia.	7	E32-C41 1M + E39-F3A-5	Spot diameter of 0.1 mm at 7 mm.		
	0.5 dia.		E32-C31 2M + E39-F3A-5	Spot diameter of 0.5 mm at 5 mm.		
			E32-C31N 2M + E39-F3A-5			
	0.2 dia.	17	E32-C41 1M + E39-F3B	Spot diameter of 0.2 mm at 17 mm.		
	0.5 dia.		E32-C31 2M + E39-F3B	Spot diameter of 0.5 mm at 17 mm.		
			E32-C31N 2M + E39-F3B			
	3 dia.	50	E32-CC200 2M + E39-F18	Spot diameter of 3 mm at 50 mm.		
			E32-C11N 2M + E39-F18			

High-power Beam

Type	Sensing direction	Aperture angle	Model	Sensing distance (mm)		
				E3X-SD□ E3X-NA□	E3X-NA□F	E3X-NA□V
Through-beam Integrated lens	Right-angle	15°	E32-LT11N 2M	1,800	600	900
	Top-view	10°	E32-T17L 10M	20,000 *1	8,400	14,000
		15°	E32-LT11 2M	2,100	700	1,050
		15°	E32-LT11R 2M	1,800	600	900
	Side-view	30°	E32-T14 2M	3,600	1,080	1,800
Through-beam models with lenses	Right-angle	12°	E32-T11N 2M + E39-F1	3,700	1,110	2,100
		6°	E32-T11N 2M + E39-F16	4,000 *2	2,000	3,600
	Top-view	12°	E32-T11R 2M + E39-F1	4,000 *2	1,260	2,100
		6°	E32-T11R 2M + E39-F16	4,000 *2	2,000	3,600
	Side-view	60°	E32-T11R 2M + E39-F2	440	130	220
	Top-view	12°	E32-T11 2M + E39-F1	4,000 *2	1,200	2,000
		6°	E32-T11 2M + E39-F16	4,000 *2	2,600	4,000 *2
	Side-view	60°	E32-T11 2M + E39-F2	720	200	360
	Top-view	12°	E32-T51R 2M + E39-F1	2,000	720	1,650
		6°	E32-T51R 2M + E39-F16	4,000 *2	1,560	2,900
	Side-view	60°	E32-T51R 2M + E39-F2	360	120	200
	Top-view	12°	E32-T81R-S 2M + E39-F1	1,800	630	1,100
		6°	E32-T81R-S 2M + E39-F16	4,000 *2	1,300	2,300
	Side-view	60°	E32-T81R-S 2M + E39-F2	280	84	140
	Top-view	12°	E32-T61-S 2M + E39-F1	4,000 *2	1,800	3,000
		6°	E32-T61-S 2M + E39-F16	4,000 *2	2,340	3,900
	Side-view	60°	E32-T61-S 2M + E39-F2	780	260	390
	Top-view	12°	E32-T51 2M + E39-F1-33	2,400	720	1,400
		6°	E32-T51 2M + E39-F16	4,000 *2	3,120	4,000 *2
Reflective Integrated lens	Top-view	4°	E32-D16 2M	800	140	40 to 400

✻1. The fiber length is 10 m on each side, so the sensing distance is given as 20,000 mm.
✻2. The fiber length is 2 m on each side, so the sensing distance is given as 4,000 mm.

Narrow View

Detection method	Sensing direction	Aperture angle	Model	Sensing distance (mm)		
				E3X-SD□ E3X-NA□	E3X-NA□F	E3X-NA□V
Through-beam	Side-view	1.5°	E32-A03 2M	890	267	445
			E32-A03-1 2M			
		3.4°	E32-A04 2M	340	102	170
		4°	E32-T24SR 2M	1,170	360	600
			E32-T24S 2M	1,400	420	700
			E32-T22S 2M	2,000	600	1,000

Detection without Background Interference

Detection method	Sensing direction	Model	Sensing distance (mm)		
			E3X-SD□ E3X-NA□	E3X-NA□F	E3X-NA□V
Limited-reflective	Flat-view	E32-L16-N 2M	0 to 15	0 to 12	0 to 15
		E32-L24S 2M	0 to 4		
	Side-view	E32-L25L 2M	5.4 to 9 (center 7.2)	5.4 to 8 (center 7.2)	5.4 to 9 (center 7.2)

Transparent Object Detection (Retro-reflective)

Detection method	Feature	Size	Model	Sensing distance (mm)		
				E3X-SD□ E3X-NA□	E3X-NA□F	E3X-NA□V
Retroreflective Sensors	Film detection	M3	E32-C31 2M + E39-F3R + E39-RP37	220	50	75
	Square	–	E32-R16 2M	1,500	1,000	150 to 1,500
	Threaded Models	M6	E32-R21 2M	10 to 250	250	10 to 250
	Hex-shaped		E32-LR11NP 2M + E39-RP1	600	200	300

Transparent Object Detection (Limited-reflective)

Detection method	Feature	Sensing direction	Model	Sensing distance (mm)		
				E3X-SD□ E3X-NA□	E3X-NA□F	E3X-NA□V
Retro-reflective	Small size	Flat-view	E32- L24S 2M	0 to 4		
	Standard		E32-L16-N 2M	0 to 15	0 to 12	0 to 15
	Glass substrate alignment, 70°C		E32-A08 2M	10 to 20		
	Standard/ long-distance		E32-A12 2M	12 to 30	–	–
	Side view form	Side-view	E32-L25L 2M	5.4 to 9 (center 7.2)	5.4 to 8 (center 7.2)	5.4 to 9 (center 7.2)
	Glass substrate mapping, 70°C	Top-view	E32-A09 2M	15 to 38 (center 25)		

Chemical-resistant, Oil-resistant

Detection method	Type	Sensing direction	Model	Sensing distance (mm)		
				E3X-SD□ E3X-NA□	E3X-NA□F	E3X-NA□V
Through-beam	Oil-resistant	Right-angle	E32-T11NF 2M	4,000 *	1,400	2,400
	Chemical/oil-resistant	Top-view	E32-T12F 2M	3,200	960	1,600
			E32-T11F 2M	2,100	760	1,050
		Side-view	E32-T14F 2M	400	120	200
	Chemical/oil-resistant at 150°C	Top-view	E32-T51F 2M	1,400	400	700
Reflective	Semiconductors: Cleaning, developing, and etching; 60°C	Top-view	E32-L11FP 2M	8 to 20 mm from tip of lens (Recommended sensing distance: 11 mm), 19 to 31 mm from center of mounting hole A (Recommended sensing distance: 22 mm)		
	Semiconductors: Resist stripping; 85°C		E32-L11FS 2M	8 to 20 mm from tip of lens (Recommended sensing distance: 11 mm), 32 to 44 mm from center of mounting hole A (Recommended sensing distance: 35 mm)		
	Chemical/oil-resistant		E32-D12F 2M	100	32	50
	Chemical-resistant cable		E32-D11U 2M	180	60	90

*The fiber length is 2 m on each side, so the sensing distance is given as 4,000 mm.

Bending-resistant

Detection method	Size	Model	Sensing distance (mm)		
			E3X-SD□ E3X-NA□	E3X-NA□F	E3X-NA□V
Through-beam	1.5 dia.	E32-T22B 2M	200	60	100
	M3	E32-T21 2M			
	M4	E32-T11 2M	720	200	360
	Square	E32-T25XB 2M	150	40	75
Reflective	1.5 dia.	E32-D22B 2M	30	10	15
	M3	E32-D21 2M			
	3 dia.	E32-D221B 2M	70	20	35
	M4	E32-D21B 2M			
	M6	E32-D11 2M	180	60	90
	Square	E32-D25XB 2M	50	16	25

Heat-resistant

Detection method	Heat-resistant temperature	Model	Sensing distance (mm)		
			E3X-SD□ E3X-NA□	E3X-NA□F	E3X-NA□V
Through-beam	100°C	E32-T51R 2M	400	120	225
	150°C	E32-T51 2M	800	240	400
	200°C	E32-T81R-S 2M	360	100	180
	350°C	E32-T61-S 2M	600	180	300
Reflective	100°C	E32-D51R 2M	140	42	70
	150°C	E32-D51 2M	240	80	120
	200°C	E32-D81R 2M	90	27	45
	300°C	E32-A08H2 2M	10 to 20		
		E32-A09H2 2M	20 to 30 (center 25)		
	350°C	E32-D61 2M	90	27	45
	400°C	E32-D73 2M	60	18	30

Area Beam

Detection method	Type	Sensing width	Model	Sensing distance (mm)		
				E3X-SD□ E3X-NA□	E3X-NA□F	E3X-NA□V
Through-beam	Area	11 mm	E32-T16PR 2M	800	260	450
			E32-T16JR 2M	700	220	390
		30 mm	E32-T16WR 2M	1,380	400	690
Reflective	Array	11 mm	E32-D36P1 2M	150	50	75

Liquid-level Detection

Detection method	Pipe diameter	Feature	Model	Sensing distance (mm)		
				E3X-SD□ E3X-NA□	E3X-NA□F	E3X-NA□V
Tube-mounting	3.2/6.4/9.5 dia.	Stable residual quantity detection	E32-A01 5M	Applicable tube: Transparent tube with a diameter of 3.2, 6.4, or 9.5 mm, Recommended wall thickness: 1 mm		
	8 to 10 dia.	Mounting at multi levels	E32-L25T 2M	Applicable tube: Transparent tube with a diameter of 8 to 10 mm, Recommended wall thickness: 1 mm		
	No restrictions	Large tubes	E32-D36T 2M	Applicable tube: Transparent tube (no restrictions on diameter)		
Liquid contact (heat-resistant up to 200°C)	–	–	E32-D82F1 4M	Liquid-contact model		

Vacuum-resistant

Detection method	Heat-resistant temperature	Model	Sensing distance (mm)		
			E3X-SD□ E3X-NA□	E3X-NA□F	E3X-NA□V
Through-beam	120°C	E32-T51V 1M	200	–	100
		E32-T51V 1M + E39-F1V	1,200	–	600
	200°C	E32-T84SV 1M	500	–	250

FPD, Semiconductors, and Solar Cells

Detection method	Application	Operating temperature	Model	Sensing distance (mm)		
				E3X-SD□ E3X-NA□	E3X-NA□F	E3X-NA□V
Limited-reflective	Glass presence detection	70°C	E32-L16-N 2M	0 to 15	0 to 12	0 to 15
	Glass substrate alignment	70°C	E32-A08 2M	10 to 20		
		300°C	E32-A08H2 2M			
		70°C	E32-A12 2M	12 to 30	–	–
	Glass substrate mapping	70°C	E32-A09 2M	15 to 38 (center 25)		
		300°C	E32-A09H2 2M	20 to 30 (center 25)		
	Wet processes: Cleaning, Resist developing and etching	60°C	E32-L11FP 2M	8 to 20 mm from tip of lens (Recommended sensing distance: 11 mm), 19 to 31 mm from center of mounting hole A (Recommended sensing distance: 22 mm)		
	Wet process: Resist stripping	85°C	E32-L11FS 2M	8 to 20 mm from tip of lens (Recommended sensing distance: 11 mm), 32 to 44 mm from center of mounting hole A (Recommended sensing distance: 35 mm)		
Through-beam	Wafer mapping	70°C	E32-A03 2M	890	267	445
			E32-A03-1 2M			
			E32-A04 2M	340	102	170
			E32-T24SR 2M	1,170	360	600
			E32-T24S 2M	1,400	420	700

E3X-SD/-NA

I/O Circuit Diagrams

<table>
<tr><th>Output form</th><th>Model</th><th>Output transistor operation mode</th><th>Timing charts</th><th>Operation selector</th><th>Output circuit</th></tr>
<tr><td rowspan="2">NPN Output</td><td rowspan="2">E3X-SD21
E3X-SD7

E3X-NA11
E3X-NA6
E3X-NA11F
E3X-NA11V
E3X-NA14V</td><td>Light-ON</td><td>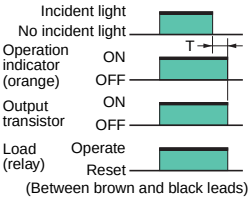
</td><td>LIGHT ON (L-ON)</td><td rowspan="2">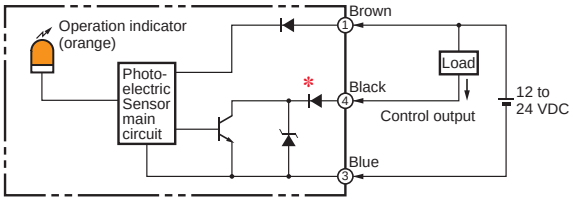

• M8 Connector Pin Arrangement

Note: Pin 2 is not used.
✻ Not present on the E3X-NA.</td></tr>
<tr><td>Dark-ON</td><td>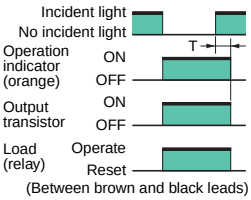
</td><td>DARK ON (D-ON)</td></tr>
<tr><td rowspan="2">PNP Output</td><td rowspan="2">E3X-SD51
E3X-SD9

E3X-NA41
E3X-NA8
E3X-NA41F
E3X-NA41V
E3X-NA44V</td><td>Light-ON</td><td>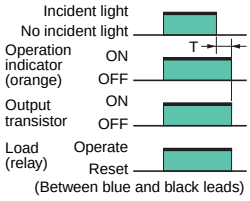
</td><td>LIGHT ON (L-ON)</td><td rowspan="2">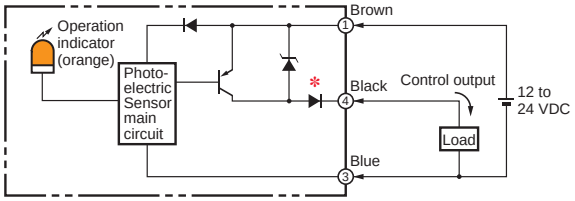

• M8 Connector Pin Arrangement

Note: Pin 2 is not used.
✻ Not present on the E3X-NA.</td></tr>
<tr><td>Dark-ON</td><td>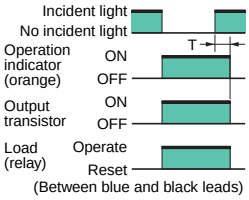
</td><td>DARK ON (D-ON)</td></tr>
</table>

Note: Timing Charts for Timer Settings (T: Set Time)

OFF delay

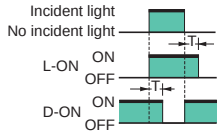

Plug (Sensor I/O Connector)

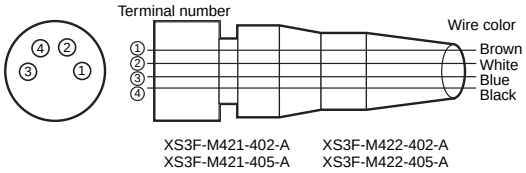

Classification	Wire color	Connection pin	Application
DC	Brown	1	Power supply (+V)
	White	2	---
	Blue	3	Power supply (0 V)
	Black	4	Output

Note: Pin 2 is not used.

Safety Precautions

⚠ WARNING

This product is not designed or rated for ensuring safety of persons either directly or indirectly.
Do not use it for such purposes.



⚠ Caution

Do not exceed the rated voltage.
Excess voltage may result in malfunction or fire.



Do not use an AC power supply.
Using an AC power supply may result in rupturing.



High-temperature environments may result in burn injury.



Precautions for Safe Use

The following precautions must be observed to ensure safety.

1. Do not use the product in locations where flammable or explosive gas is present.
2. Do not use the product in locations subject to splashing water, oil, or chemicals, or in locations subject to steam.
3. Do not attempt to disassemble, repair, or modify the product.
4. Do not apply voltage or current in excess of the rated ranges.
5. Do not use the product in atmospheres or environments that exceed product ratings.
6. Do not wire the product incorrectly, such as using incorrect power supply polarity.
7. Connect the load properly.
8. Do not short-circuit both ends of the load.
9. Do not use the product if the case is damaged.
10. When disposing of the product, dispose of it as industrial waste.
11. Do not use the product in locations subject to direct sunlight.
12. The surface temperature of the product may rise as a result of the ambient temperature, power supply, or other usage conditions. Use caution when performing maintenance and washing. Failure to do so may result in burn injury.

Precautions for Correct Use

Do not use the product in atmospheres or environments that exceed product ratings.

Fiber Amplifier Units

● Designing

Communications Hole

The hole on the side of the Amplifier Unit is a communications hole for preventing mutual interference when Amplifier Units are mounted side-by-side. The E3X-MC11 Mobile Console (sold separately) cannot be used.
If an excessive amount of light is received via the Sensor, the mutual interference prevention function may not work. In this case, make the appropriate adjustments using the sensitivity adjuster.
Mutual interference prevention is effective when E3X-SD/-NA-series Amplifier Units are gang-mounted without other E3X-series Amplifiers.

● Mounting

DIN Track Mounting/Removal

Mounting Fiber Amplifier Units

1. Mount the Amplifier Units one at a time onto the DIN track.

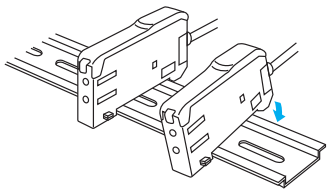

2. Slide the Amplifier Units together, line up the clips, and press the Amplifier Units together until they click into place.

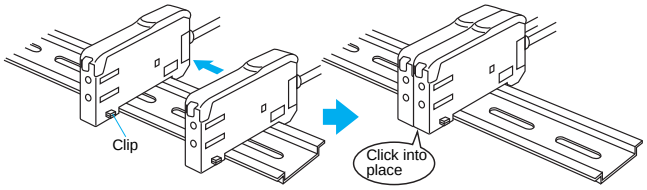

Removing Fiber Amplifier Units

Slide Amplifier Units away from each other, and remove from the DIN track one at a time. (Do not attempt to remove Amplifier Units from the DIN track without separating them first.)

Note 1. The specifications for ambient temperature will vary according to the number of Amplifier Units used together. For details, refer to *Ratings and Specifications*.
2. Always turn OFF the power supply before mounting or removing Amplifier Units.

Fiber Unit Connection and Disconnection

The E3X Amplifier Unit has a lock lever. Connect or disconnect the fiber units to or from the E3X Amplifier Unit using the following procedures:

1. Connection

Open the Protective Cover, insert the fiber units according to the fiber unit insertion marks on the side of the Amplifier Unit, and lower the lock lever.

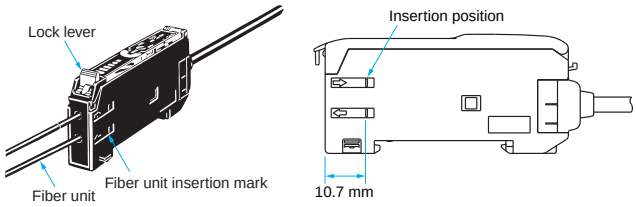

Note: If one of the fibers from the Fiber Unit is labeled as the Emitter fiber, such as with a Coaxial Sensor, insert that fiber into the Emitter section. Refer to *Dimensions for the Fiber Unit* to see if there is an Emitter fiber label.

2. Disconnection

Remove the Protective Cover and raise the lock lever to pull out the fiber unit.

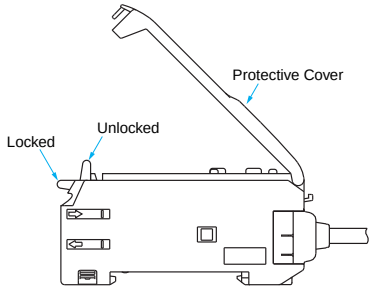

Note: To maintain the fiber unit properties, confirm that the lock is released before removing the fiber unit.

3. Precautions for Fiber Unit Connection/Disconnection

Be sure to lock or unlock the lock lever within an ambient temperature range between –10°C and 40°C.

● **Operating Environment**

Ambient Conditions

If dust or dirt adhere to the hole for optical communications, it may prevent normal communications. Be sure to remove any dust or dirt before using the Units.

● **Other**

Protective Cover

Be sure to mount the Protective Cover before use.

Fiber Amplifier Unitts with Connectors

● **Mounting**

Mounting Connectors

1. Insert the Master or Slave Connector into the Amplifier Unit until it clicks into place.

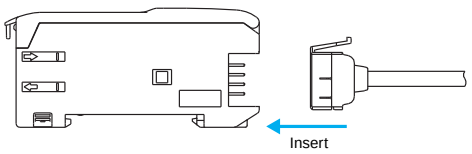

2. Join Amplifier Units together as required after all the Master and Slave Connectors have been inserted.
3. Attach the stickers (provided as accessories) to the sides of Master and Slave Connectors that are not connected to other Connectors.

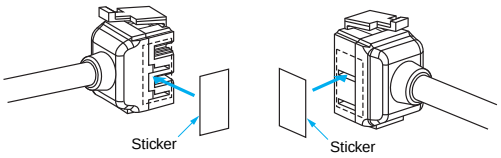

Note: Attach the stickers to the sides with grooves.

Removing Connectors

1. Slide the slave Amplifier Unit for which the Connector is to be removed away from the rest of the group.
2. After the Amplifier Unit has been separated, press down on the lever on the Connector and remove it. (Do not attempt to remove Connectors without separating them from other Amplifier Units first.)

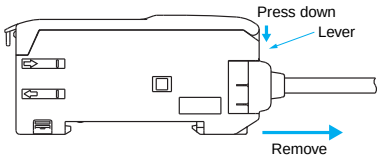

Mounting End Plate (PFP-M)

Depending on how it is mounted, an Amplifier Unit may move during operation. In this case, use an End Plate.
Before mounting an End Plate, remove the clip from the master Amplifier Unit using a nipper or similar tool.

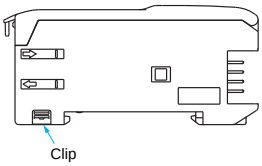

The clip can also be removed using the following mechanism, which is incorporated in the construction of the section underneath the clip.

1. Insert the clip to be removed into the slit underneath the clip on another Amplifier Unitt.

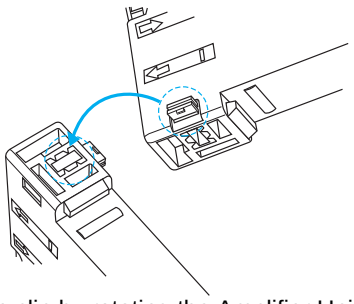

2. Remove the clip by rotating the Amplifier Unit.

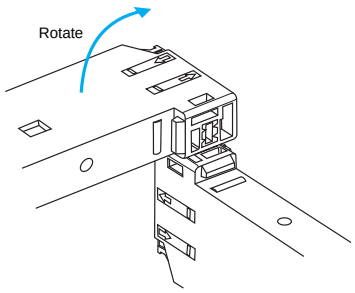

Pull Strengths for Connectors (Including Cables)

E3X-CN11: 30 N max.
E3X-CN12: 12 N max.

Dimensions

(Unit: mm)
Tolerance class IT16 applies to dimensions in this sheet unless otherwise specified.

Fiber Amplifier Units

Amplifier Units with Cables

E3X-SD21
E3X-SD51
E3X-NA11
E3X-NA11F
E3X-NA41
E3X-NA41F

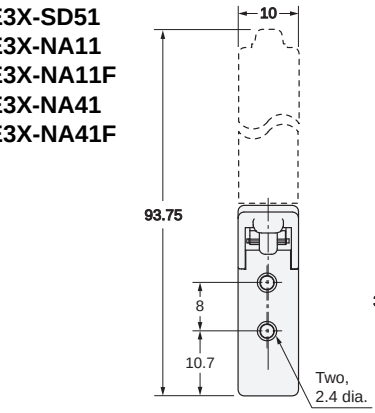

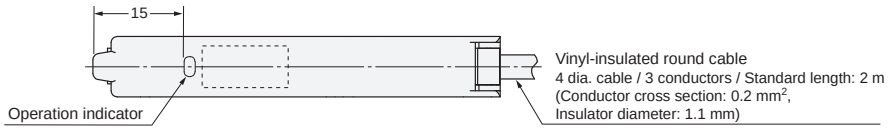

DIN track mounting

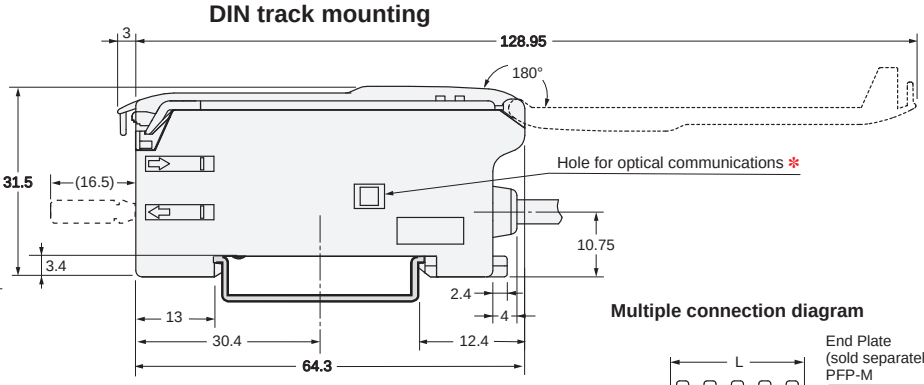



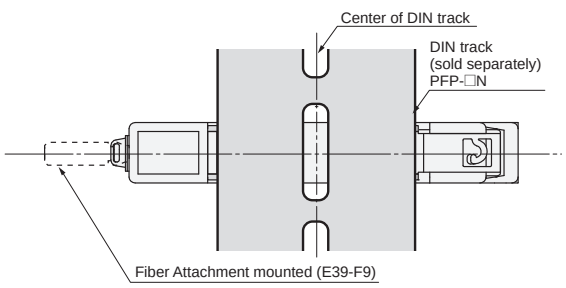

Multiple connection diagram

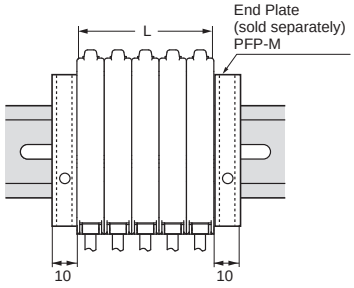

The number of expansion	L (mm)
1	10
2	20
3	30
4	40
5	50
6	60
7	70
8	80
9	90
10	100

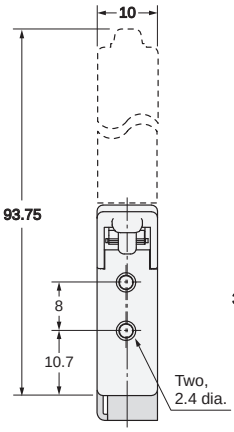

With Mounting Bracket Attached

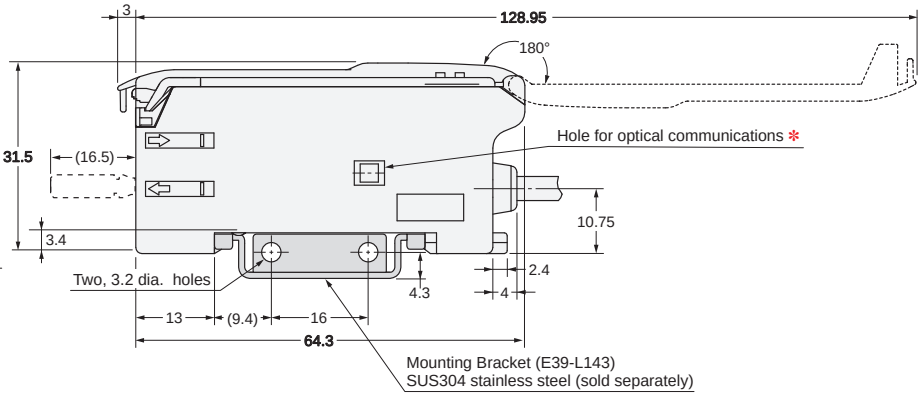

Mounting Holes

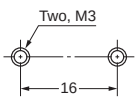

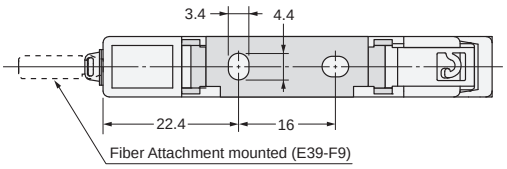

✻ There is no hole for E3X-NA□F models.

Note: When using E39-L143 Mounting Brackets, there will be small gaps between the Fiber Amplifier Units if they are mounted side by side.

Amplifier Units with Connectors

E3X-SD7
E3X-SD9
E3X-NA6
E3X-NA8



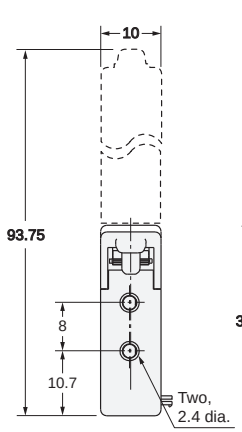

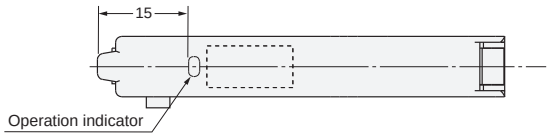

DIN track mounting

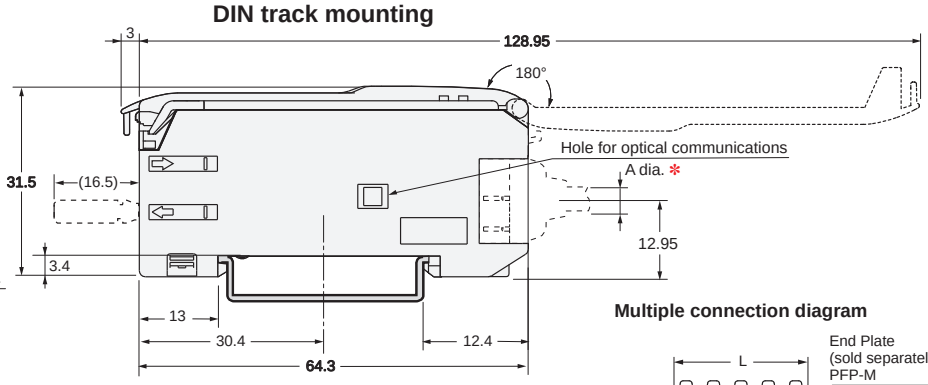

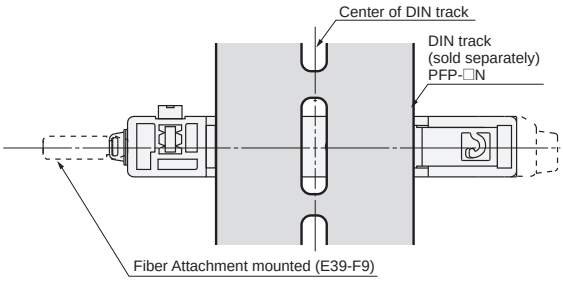

Multiple connection diagram

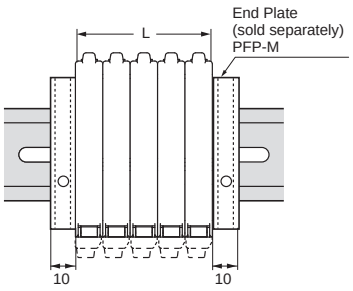

The number of expansion	L (mm)
1	10
2	20
3	30
4	40
5	50
6	60
7	70
8	80
9	90
10	100

With Mounting Bracket Attached

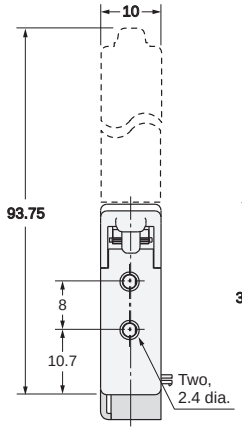

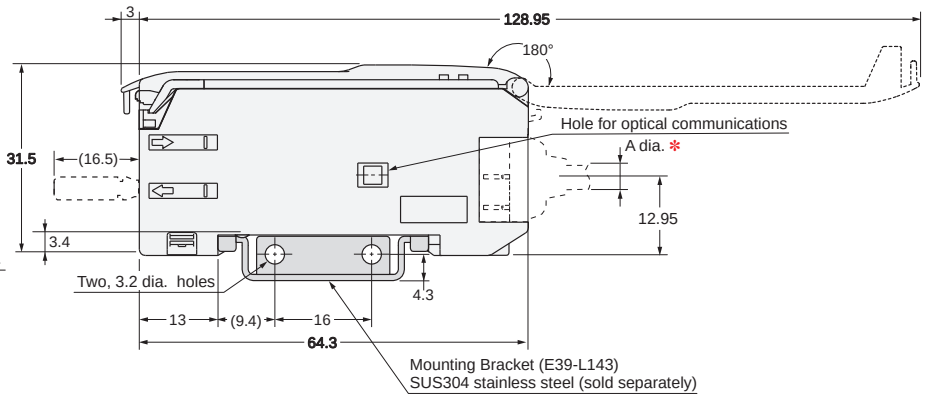

Mounting Holes

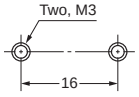

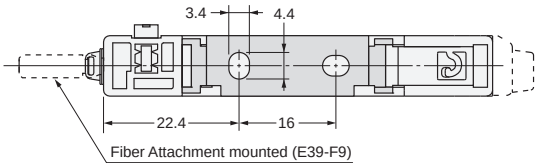

✻ Cable Diameters

E3X-CN11 (3 conductors)	4.0 dia.
E3X-CN12 (1 conductor)	2.6 dia.

Note: When using E39-L143 Mounting Brackets, there will be small gaps between the Fiber Amplifier Units if they are mounted side by side.

Amplifier Units with Cables, Water-resistant Models

E3X-NA11V
E3X-NA41V

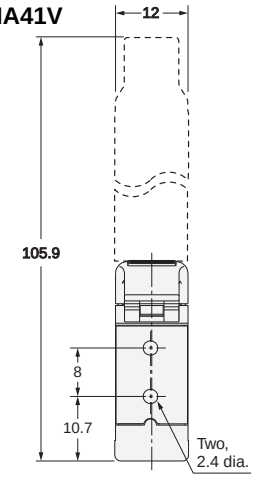

Area of digital indication

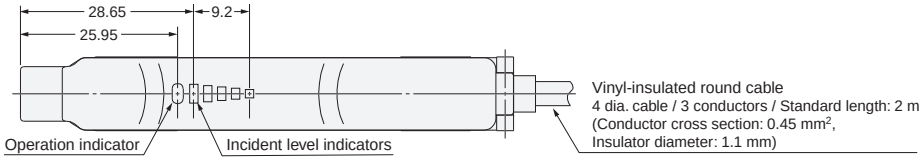

DIN track mounting

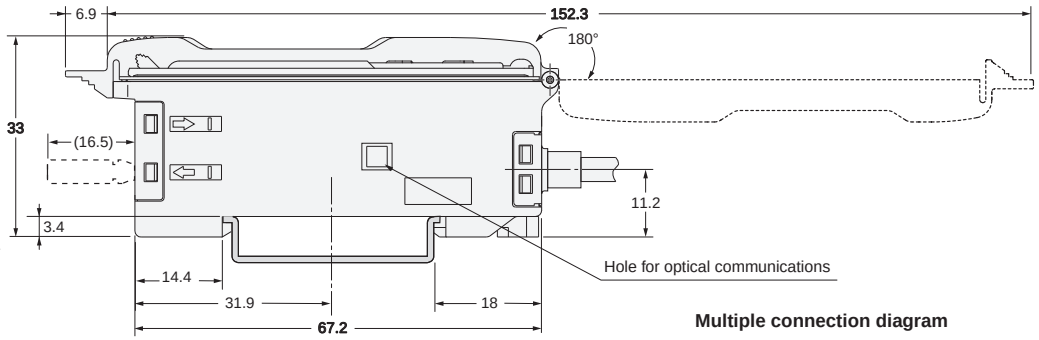



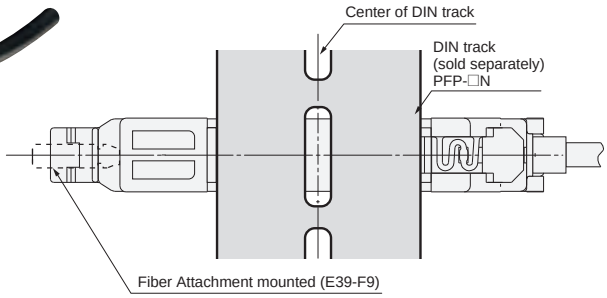

Multiple connection diagram

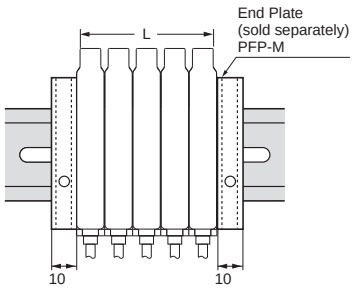

The number of expansion	L (mm)
1	12
2	24
3	36
4	48
5	60
6	72
7	84
8	96
9	108
10	120

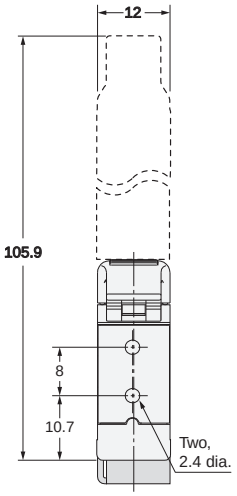

With Mounting Bracket Attached

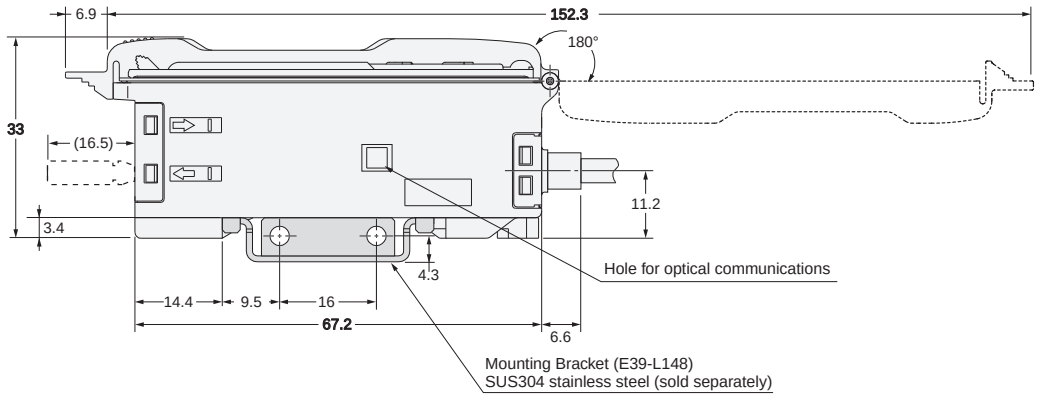

Mounting Holes

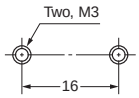

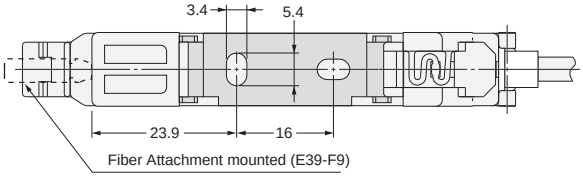

Amplifier Units with Connectors, Water-resistant Models

E3X-NA14V
E3X-NA44V

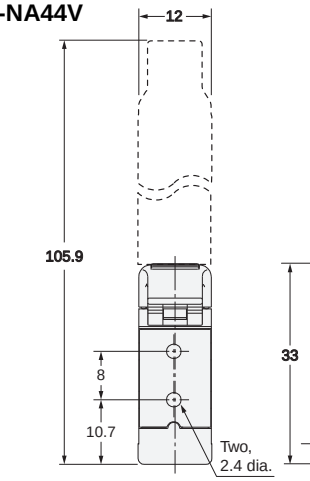

Area of digital indication

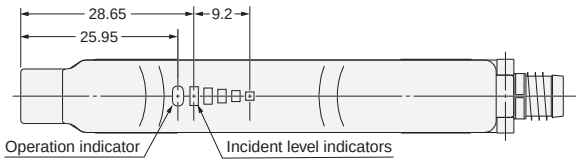

DIN track mounting

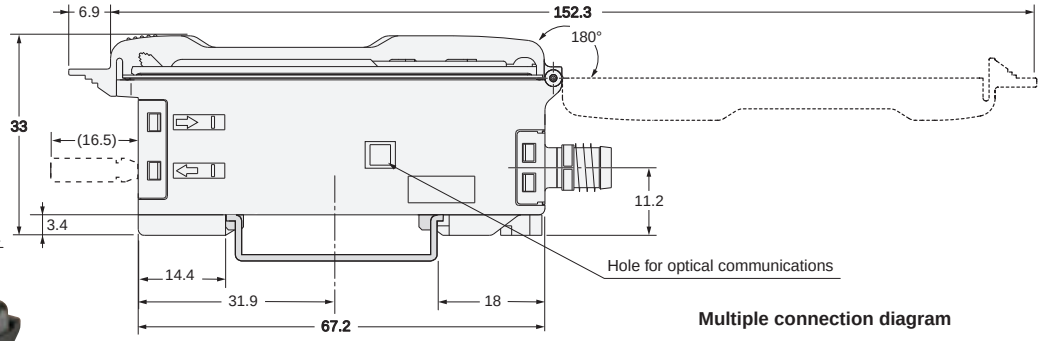



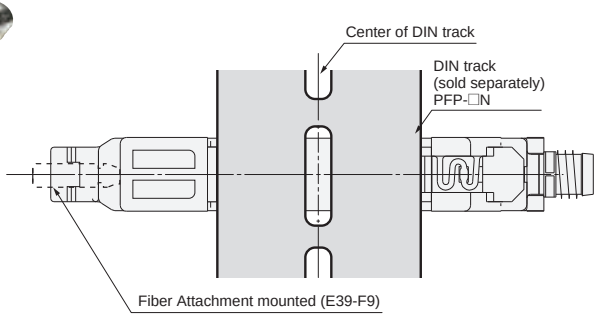

Multiple connection diagram

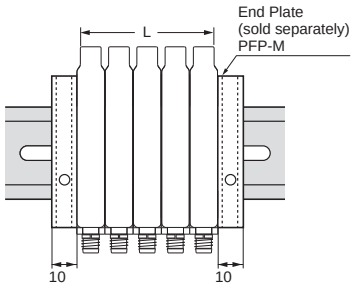

The number of expansion	L (mm)
1	12
2	24
3	36
4	48
5	60
6	72
7	84
8	96
9	108
10	120

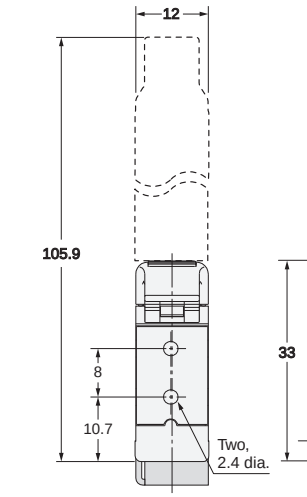

With Mounting Bracket Attached

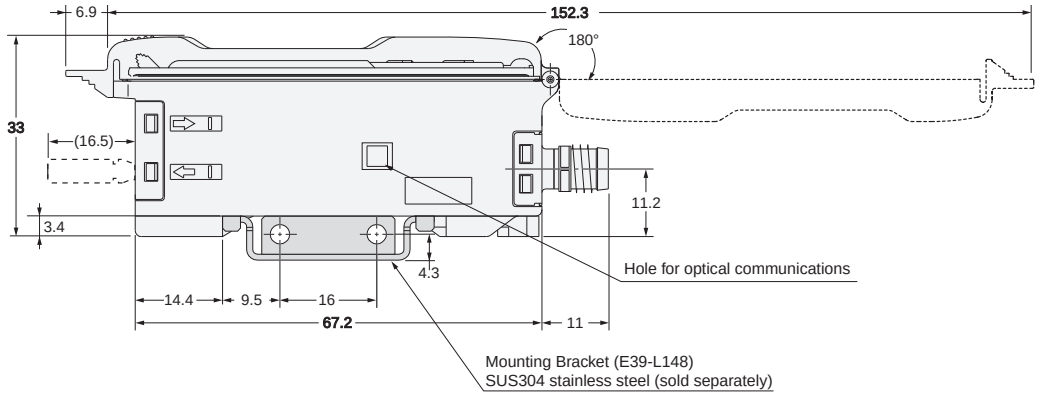

Mounting Holes

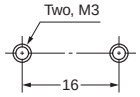

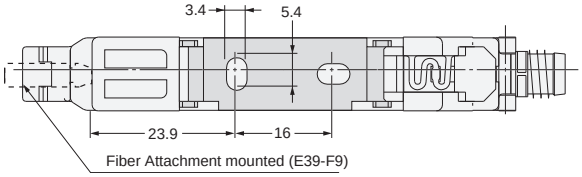

Amplifier Unit Connectors (Wire-saving Connectors)

Master Connector
E3X-CN11



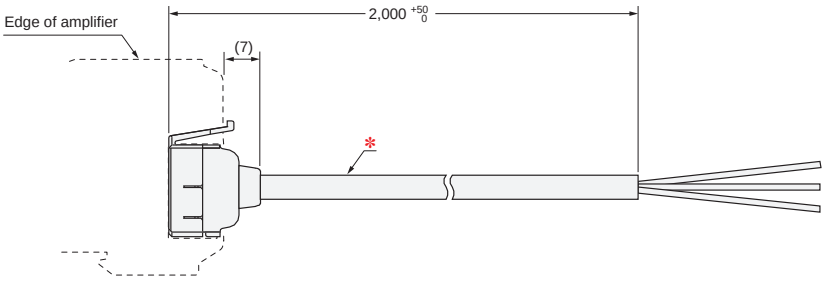

* E3X-CN11: **4 dia.** cable / **3 conductors** / Standard length: 2 m (Conductor cross section: 0.2 mm^2 (AWG24), Insulator diameter: 1.1 mm)

Slave Connector
E3X-CN12



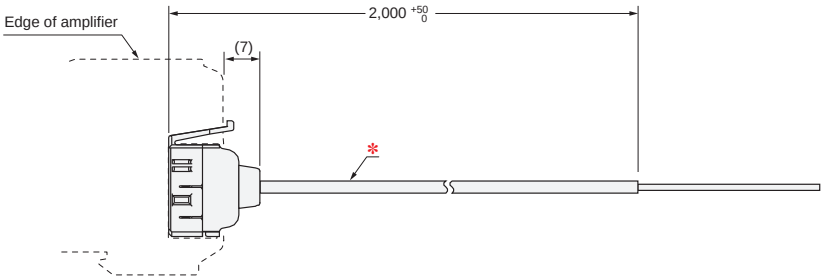

* E3X-CN12: **2.6 dia.** cable / **1 conductor** / Standard length: 2 m (Conductor cross section: 0.2 mm^2 (AWG24), Insulator diameter: 1.1 mm)

Accessories (sold separately)

Mounting Brackets
E39-L143

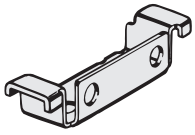

Material: Stainless steel (SUS304)

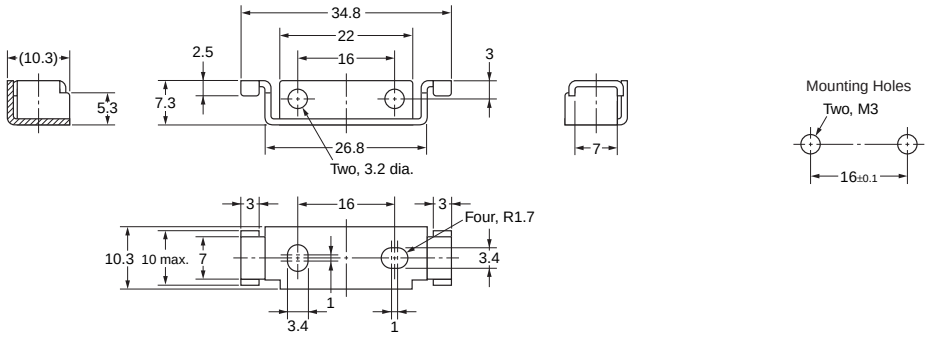

End Plates
PFP-M

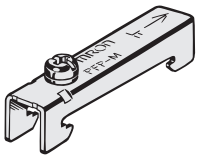

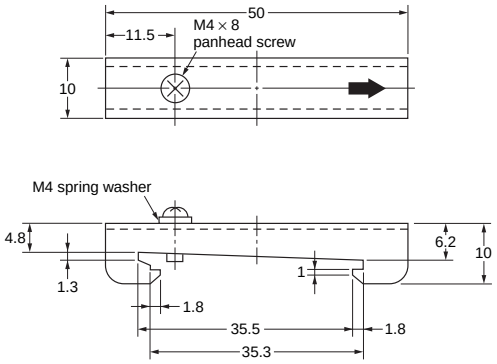

Nomenclature

Fiber Amplifier Units

E3X-SD

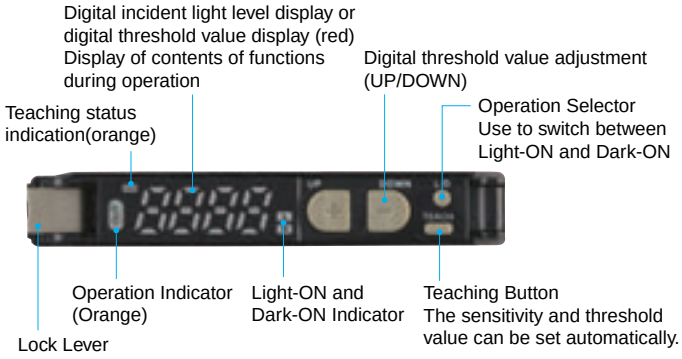

E3X-NA

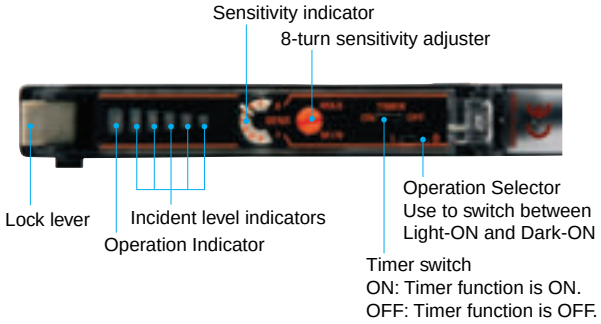

Operating Procedure

E3X-SD

1 Sensitivity Setting

The sensitivity can be set with the UP and DOWN Keys similar to using an adjuster knob. The sensitivity can also be easily set by using the following two teaching functions.

2-1. Teaching with/without a Workpiece

Two points (one with the workpiece and the other without) are detected, and the operating level is set to the midpoint. Light level is also automatically set to the optimal value.

Operation description	Button/Key
Press the TEACH button with the workpiece.	TEACH
Press the TEACH button without the workpiece.	TEACH

2-2. Automatic Teaching

Changes within a time are detected, and the operating level is set to the midpoint between the maximum and the minimum values of the changes. This setting is optimal for when the workpieces cannot be stopped. Execute automatic teaching again if the incident light level is not automatically set to the optimal value.

Operation description	Button/Key
Press the TEACH button for 3 s min. Let the workpiece pass while the button is pressed.	TEACH

E3X-NA

1 Displays

A bar display (with four green and one red) showing excess gain is provided in addition to the orange operation indicator. Use these when adjusting the light axis and setting the sensitivity at setup.

Display/indicator status (for L/ON)	Excess gain level	Description
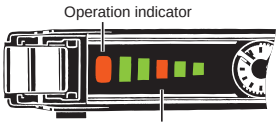	Approx. 120% min.	Stable incident light
	Approx. 110% to 120%	
	Approx. 90% to 110%	Unstable incident light or Unstable interrupted light
	Approx. 80% to 90%	Stable interrupted light
	Approx. 80% max.	

READ AND UNDERSTAND THIS DOCUMENT

Please read and understand this document before using the products. Please consult your OMRON representative if you have any questions or comments.

WARRANTY

OMRON's exclusive warranty is that the products are free from defects in materials and workmanship for a period of one year (or other period if specified) from date of sale by OMRON.

OMRON MAKES NO WARRANTY OR REPRESENTATION, EXPRESS OR IMPLIED, REGARDING NON-INFRINGEMENT, MERCHANTABILITY, OR FITNESS FOR PARTICULAR PURPOSE OF THE PRODUCTS. ANY BUYER OR USER ACKNOWLEDGES THAT THE BUYER OR USER ALONE HAS DETERMINED THAT THE PRODUCTS WILL SUITABLY MEET THE REQUIREMENTS OF THEIR INTENDED USE. OMRON DISCLAIMS ALL OTHER WARRANTIES, EXPRESS OR IMPLIED.

LIMITATIONS OF LIABILITY

OMRON SHALL NOT BE RESPONSIBLE FOR SPECIAL, INDIRECT, OR CONSEQUENTIAL DAMAGES, LOSS OF PROFITS OR COMMERCIAL LOSS IN ANY WAY CONNECTED WITH THE PRODUCTS, WHETHER SUCH CLAIM IS BASED ON CONTRACT, WARRANTY, NEGLIGENCE, OR STRICT LIABILITY.

In no event shall responsibility of OMRON for any act exceed the individual price of the product on which liability is asserted.

IN NO EVENT SHALL OMRON BE RESPONSIBLE FOR WARRANTY, REPAIR, OR OTHER CLAIMS REGARDING THE PRODUCTS UNLESS OMRON'S ANALYSIS CONFIRMS THAT THE PRODUCTS WERE PROPERLY HANDLED, STORED, INSTALLED, AND MAINTAINED AND NOT SUBJECT TO CONTAMINATION, ABUSE, MISUSE, OR INAPPROPRIATE MODIFICATION OR REPAIR.

SUITABILITY FOR USE

THE PRODUCTS CONTAINED IN THIS DOCUMENT ARE NOT SAFETY RATED. THEY ARE NOT DESIGNED OR RATED FOR ENSURING SAFETY OF PERSONS, AND SHOULD NOT BE RELIED UPON AS A SAFETY COMPONENT OR PROTECTIVE DEVICE FOR SUCH PURPOSES. Please refer to separate catalogs for OMRON's safety rated products.

OMRON shall not be responsible for conformity with any standards, codes, or regulations that apply to the combination of products in the customer's application or use of the product.

At the customer's request, OMRON will provide applicable third party certification documents identifying ratings and limitations of use that apply to the products. This information by itself is not sufficient for a complete determination of the suitability of the products in combination with the end product, machine, system, or other application or use.

The following are some examples of applications for which particular attention must be given. This is not intended to be an exhaustive list of all possible uses of the products, nor is it intended to imply that the uses listed may be suitable for the products:

- Outdoor use, uses involving potential chemical contamination or electrical interference, or conditions or uses not described in this document.
- Nuclear energy control systems, combustion systems, railroad systems, aviation systems, medical equipment, amusement machines, vehicles, safety equipment, and installations subject to separate industry or government regulations.
- Systems, machines, and equipment that could present a risk to life or property.

Please know and observe all prohibitions of use applicable to the products.

NEVER USE THE PRODUCTS FOR AN APPLICATION INVOLVING SERIOUS RISK TO LIFE OR PROPERTY WITHOUT ENSURING THAT THE SYSTEM AS A WHOLE HAS BEEN DESIGNED TO ADDRESS THE RISKS, AND THAT THE OMRON PRODUCT IS PROPERLY RATED AND INSTALLED FOR THE INTENDED USE WITHIN THE OVERALL EQUIPMENT OR SYSTEM.

PERFORMANCE DATA

Performance data given in this document is provided as a guide for the user in determining suitability and does not constitute a warranty. It may represent the result of OMRON's test conditions, and the users must correlate it to actual application requirements. Actual performance is subject to the OMRON Warranty and Limitations of Liability.

CHANGE IN SPECIFICATIONS

Product specifications and accessories may be changed at any time based on improvements and other reasons.

It is our practice to change model numbers when published ratings or features are changed, or when significant construction changes are made. However, some specifications of the product may be changed without any notice. When in doubt, special model numbers may be assigned to fix or establish key specifications for your application on your request. Please consult with your OMRON representative at any time to confirm actual specifications of purchased products.

DIMENSIONS AND WEIGHTS

Dimensions and weights are nominal and are not to be used for manufacturing purposes, even when tolerances are shown.

ERRORS AND OMISSIONS

The information in this document has been carefully checked and is believed to be accurate; however, no responsibility is assumed for clerical, typographical, or proofreading errors, or omissions.

PROGRAMMABLE PRODUCTS

OMRON shall not be responsible for the user's programming of a programmable product, or any consequence thereof.

COPYRIGHT AND COPY PERMISSION

This document shall not be copied for sales or promotions without permission.

This document is protected by copyright and is intended solely for use in conjunction with the product. Please notify us before copying or reproducing this document in any manner, for any other purpose. If copying or transmitting this document to another, please copy or transmit it in its entirety.

This document provides information mainly for selecting suitable models. Please read the Instruction sheet carefully for information that the user must understand and accept before purchase, including information on warranty, limitations of liability, and precautions.

Note: Do not use this document to operate the Unit.

OMRON Corporation **Industrial Automation Company**

Kyoto, JAPAN **Contact : www.ia.omron.com**

Regional Headquarters

OMRON EUROPE B.V.
Wegalaan 67-69, 2132 JD Hoofddorp
The Netherlands
Tel: (31) 2356-81-300 Fax: (31) 2356-81-388

OMRON ELECTRONICS LLC
2895 Greenspoint Parkway, Suite 200
Hoffman Estates, IL 60169 U.S.A.
Tel: (1) 847-843-7900 Fax: (1) 847-843-7787

OMRON ASIA PACIFIC PTE. LTD.
438B Alexandra Road, #08-01/02 Alexandra
Technopark, Singapore 119968
Tel: (65) 6835-3011 Fax: (65) 6835-3011

OMRON (CHINA) CO., LTD.
Room 2211, Bank of China Tower,
200 Yin Cheng Zhong Road,
PuDong New Area, Shanghai, 200120, China
Tel: (86) 21-6023-0333 Fax: (86) 21-5037-2388

Authorized Distributor:

©OMRON Corporation 2010-2023 All Rights Reserved.
In the interest of product improvement,
specifications are subject to change without notice.

CSM_6_4
Cat. No. E401-E1-02 1123 (0110)