Smart Fiber Amplifier Units

E3NX-MA

2-channel Amplifier reduces installation space by half. Downsized Equipment and Control Panels

- The new 2-ch fiber amplifier unit has two-unit functions in the dimensions of the general one-unit, contributing to downsizing your equipment and control panels.
- Performance with highly stable detection even with two channels, from transparent objects to low-reflective workpieces.
- Easy to set the light intensity and threshold automatically.
- Wire-saving Connector models reduce wiring work.



Refer to the *Safety Precautions* on page 10.

For the most recent information on models that have been certified for safety standards, refer to your OMRON website.

Ordering Information

Fiber Amplifier Units (Dimensions → pages 12 and 13)

Type		Connecting method	Appearance	Inputs/outputs	Model	
					NPN output	PNP output
2-channel models ✻2	Standard Type	Pre-wired (2 m)		2 outputs	**E3NX-MA11**	**E3NX-MA41**
		Wire-saving Connector		2 outputs	**E3NX-MA6**	**E3NX-MA8**
	Model for Sensor Communications Unit ✻1	Connector for Sensor Communications Unit		---	**E3NX-MA0**	

✻1. A Sensor Communications Unit is required if you want to use the Fiber Amplifier Unit on a network.
✻2. Two Fiber Units can be connected to one Fiber Amplifier Unit.

Accessories (Sold Separately)

Wire-saving Connectors (Required for models for Wire-saving Connectors.) (Dimensions → page 13)

Connectors are not provided with the Fiber Amplifier Unit and must be ordered separately. *Protective stickers are provided.

Type	Appearance	Cable length	No. of conductors	Model	Applicable Fiber Amplifier Units
Master Connector		2 m	4	**E3X-CN21**	E3NX-MA6 E3NX-MA8
Slave Connector			2	**E3X-CN22**	

Mounting Bracket (Dimensions → page 14)

A Mounting Bracket is not provided with the Fiber Amplifier Unit. It must be ordered separately as required.

Appearance	Model	Quantity
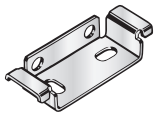	**E39-L143**	1

DIN Track (Dimensions → page 14)

A DIN Track is not provided with the Fiber Amplifier Unit. It must be ordered separately as required.

Appearance	Type	Model	Quantity
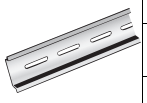	Shallow type, total length: 1 m	**PFP-100N**	1
	Shallow type, total length: 0.5 m	**PFP-50N**	
	Deep type, total length: 1 m	**PFP-100N2**	

End Plate (Dimensions → page 14)

Two End Plates are provided with the Sensor Communications Unit. End Plates are not provided with the Fiber Amplifier Unit. They must be ordered separately as required.

Appearance	Model	Quantity
	**PFP-M**	1

Related Products

Sensor Communications Units

Type	Appearance	Model
Sensor Communications Unit for EtherCAT		**E3NW-ECT**
Sensor Communications Unit for CC-Link		**E3NW-CCL**
Distributed Sensor Unit ✻		**E3NW-DS**

Refer to your OMRON website for details.
✻ The Distributed Sensor Unit can be connected to any of the Sensor Communications Units.

EtherCAT® is a registered trademark and patented technology, licensed by Beckhoff Automation GmbH, Germany.
CC-Link is a registered trademark of Mitsubishi Electric Corporation. The trademark is managed by the CC-Link Partner Association.

Ratings and Specifications

Item		Type	Standard Type		Model for Sensor Communications Unit
		NPN output	E3NX-MA11	E3NX-MA6	E3NX-MA0
		PNP output	E3NX-MA41	E3NX-MA8	
		Connecting method	Pre-wired	Wire-saving Connector	Connector for Sensor Communications Unit
Inputs/ outputs	Outputs		2 outputs		--- ✻1
	External inputs		---	---	
Light source (wavelength)			Red, 4-element LED (625 nm)		
Power supply voltage			10 to 30 VDC, including 10% ripple (p-p)		Supplied from the connector through the Sensor Communications Unit
Power consumption ✻2			At Power supply voltage of 24 VDC Normal mode : 960 mW max. (Current consumption at 40 mA max.) Eco function ON: 770 mW max. (Current consumption at 32 mA max.) Eco function LO : 870 mW max. (Current consumption at 36 mA max.)		
Control output			Load power supply voltage: 30 VDC max., open-collector output (depends on the NPN/PNP output format) Load current: Groups of 1 to 3 Amplifier Units: 100 mA max., Groups of 4 to 30 Amplifier Units: 20 mA max. (Residual voltage: At load current of less than 10 mA: 1 V max. At load current of 10 to 100 mA: 2 V max.) OFF current: 0.1 mA max.		---
Indicators			7-segment displays (Sub digital display: green, Main digital display: white) Display direction: Switchable between normal and reversed. OUT indicator (orange), L/D indicator (orange), ST indicator (blue), DPC indicator (green), and OUT selection indicator (orange)		
Protection circuits			Power supply reverse polarity protection, output short-circuit protection, and output reverse polarity protection		Power supply reverse polarity protection and output shortcircuit protection
Response time	Super-high-speed mode (SHS)		Operate or reset: 100 μs		
	High-speed mode (HS)		Operate or reset: 450 μs		
	Standard mode (Stnd)		Operate or reset: 1ms		
	Giga-power mode (GIGA)		Operate or reset: 16ms		
Sensitivity adjustment			Smart Tuning (2-point tuning, full auto tuning, position tuning, maximum sensitivity tuning, power tuning, or percentage tuning (−99% to 99%)) or manual adjustment		
Maximum connectable Units			30		With E3NW-ECT: 30 units ✻3 With E3NW-CCL: 16 units
No. of Units for mutual interference prevention ✻4			9 Note: The mutual interference prevention function is disabled if the detection mode is set to super-high-speed mode.		

✻1. Two sensor outputs are allocated in the programmable logic controller PLC I/O table.
PLC operation via Communications Unit enables reading detected values and changing settings.

✻2. Power consumption
At Power supply voltage of 10 to 30 VDC
Standard Models:
Normal mode : 1080 mW max. (Current consumption: 36 mA max. at 30 VDC, 75 mA max. at 10 VDC)
Eco function ON: 840 mW max. (Current consumption: 28 mA max. at 30 VDC, 55 mA max. at 10 VDC)
Eco function LO : 960 mW max. (Current consumption: 32 mA max. at 30 VDC, 65 mA max. at 10 VDC)

✻3. When connected to an OMRON NJ-series Controller.

✻4. The tuning will not change the number of units.
The least unit count among the mutual interference prevention units of E3NX and E3NC.
Check the mutual interference prevention unit count and response speed of each model.

Item		Type	Standard Type		Model for Sensor Communications Unit
		NPN output	E3NX-MA11	E3NX-MA6	E3NX-MA0
		PNP output	E3NX-MA41	E3NX-MA8	
		Connecting method	Pre-wired	Wire-saving Connector	Connector for Sensor Communications Unit
Functions	Automatic power control (APC)		Always enabled.		
	Dynamic power control (DPC)		Provided		
	Timer		Select from timer disabled, OFF-delay, ON-delay, one-shot, or ON-delay + OFF-delay timer: 1 to 9,999 ms		
	Zero reset		Negative values can be displayed. (Threshold value is shifted.)		
	Resetting settings ✻5		Select from initial reset (factory defaults) or user reset (saved settings).		
	Eco mode		Select from OFF (digital display lit), Eco ON (digital display not lit), and Eco LO (digital display dimmed).		
	Sensor OFF setting		---		Select from ON or OFF.
	Bank switching		Select from banks 1 to 4.		
	Power tuning		Select from ON or OFF.		
	Output 1		Select from normal detection mode or area detection mode.		
	Output 2		Select from normal detection mode, AND output mode, OR output mode, XOR output mode, GAP output mode, Falling synchronization mode, Rising synchronization mode or area detection mode.		
	Hysteresis width		Select from standard setting or user setting. For a user setting, the hysteresis width can be set from 0 to 9,999.		
Ambient illumination (Receiver side)			Incandescent lamp: 20,000 lx max., Sunlight: 30,000 lx max.		
Ambient temperature range ✻6			Operating: Groups of 1 or 2 Amplifier Units: –25 to 55°C, Groups of 3 to 10 Amplifier Units: –25 to 50°C, Groups of 11 to 16 Amplifier Units: –25 to 45°C, Groups of 17 to 30 Amplifier Units: –25 to 40°C Storage: –30 to 70°C (with no icing or condensation)		Operating: Groups of 1 or 2 Amplifier Units: 0 to 55°C, Groups of 3 to 10 Amplifier Units: 0 to 50°C, Groups of 11 to 16 Amplifier Units: 0 to 45°C, Groups of 17 to 30 Amplifier Units: 0 to 40°C Storage: -30 to 70°C (with no icing or condensation)
Ambient humidity range			Operating and storage: 35 to 85% (with no condensation) within the surrounding air temperature range shown above		
Altitude			2,000 m max.		
Installation environment			Pollution degree 3		
Insulation resistance			20 MΩ min. (at 500 VDC)		
Dielectric strength			1,000 VAC at 50/60 Hz for 1 min		
Vibration resistance (destruction)			10 to 55 Hz with a 1.5-mm double amplitude for 2 hours each in X, Y, and Z directions		
Shock resistance (destruction)			500 m/s^2 for 3 times each in X, Y, and Z directions		150 m/s^2 for 3 times each in X, Y, and Z directions
Degree of protection			IEC 60529 IP50 (with Protective Cover attached)		
Weight (packed state/Sensor only)			Approx. 115 g/ approx. 75 g	Approx. 60g/ approx. 20g	Approx. 65 g/ approx. 25 g
Materials	Case		Polycarbonate (PC)		
	Cover		Polycarbonate (PC)		
	Cable		PVC		
Accessories			Instruction Manual		

✻5. The bank is not reset by the user reset function or saved by the user save function.
✻6. When the number of connected units is 11 or more, the ambient temperature is less than 50°C.

Sensing Distances

Threaded Models

Sensing method	Size	Sensing direction	Aperture angle	Model	Sensing distance (mm)			
					Giga mode	Standard mode	High-speed mode	Super-high-speed mode
Through-beam	M4	Right-angle	60°	E32-T11N 2M	1,870	910	700	180
		Straight		E32-T11R 2M	1,870	910	700	180
			15°	E32-LT11 2M	4,000 ※1	3,510	2,700	700
		Right-angle		E32-LT11N 2M	4,000 ※1	2,990	2,300	590
		Straight		E32-LT11R 2M	4,000 ※1	2,990	2,300	590
Reflective	M3	Right-angle	60°	E32-C31N 2M	100	44	32	9
				E32-C21N 2M	480	190	140	43
	M4			E32-D21N 2M	800	320	240	72
	M6			E32-C11N 2M	740	310	240	66
			15°	E32-LD11N 2M	790	310	240	71
	M3	Straight	60°	E32-D21R 2M	130	57	40	11
				E32-C31 2M	330	130	100	30
				E32-C31M 1M	330	130	100	30
	M4			E32-D211R 2M	130	57	40	11
	M6			E32-D11R 2M	800	320	240	72
				E32-CC200 2M	1,340	540	400	120
			15°	E32-LD11 2M	820	330	250	74
				E32-LD11R 2M	790	310	240	71

※1. The fiber length is 2 m on each side, so the sensing distance is given as 4,000 mm.

Cylindrical Models

Sensing method	Size	Sensing direction	Model	Sensing distance (mm)			
				Giga mode	Standard mode	High-speed mode	Super-high-speed mode
Through-beam	1 dia.	Top-view	E32-T223R 2M	520	260	150	45
	1.5 dia.		E32-T22B 2M	750	370	220	65
	3 dia.		E32-T12R 2M	1,870	910	700	180
		Side-view	E32-T14LR 2M	690	330	260	67
Reflective	1.5 dia.	Top-view	E32-D22B 2M	130	57	40	11
	1.5 dia. + 0.5 dia.		E32-D43M 1M	29	12	8	2
	3 dia.		E32-D22R 2M	130	57	40	11
			E32-D221B 2M	310	120	90	26
			E32-D32L 2M	680	280	200	58
	3 dia. + 0.8 dia.		E32-D33 2M	68	28	20	5

Flat Models

Sensing method	Sensing direction	Model	Sensing distance (mm)			
			Giga mode	Standard mode	High-speed mode	Super-high-speed mode
Through-beam	Top-view	E32-T15XR 2M	1,870	910	700	180
	Side-view	E32-T15YR 2M	690	330	260	67
	Flat-view	E32-T15ZR 2M	690	330	260	67
Reflective	Top-view	E32-D15XR 2M	800	320	240	72
	Side-view	E32-D15YR 2M	180	76	52	16
	Flat-view	E32-D15ZR 2M	180	76	52	16

Sleeve Models

Sensing method	Sensing direction	Model	Sensing distance (mm)			
			Giga mode	Standard mode	High-speed mode	Super-high-speed mode
Through-beam	Side-view	E32-T24R 2M	140	71	50	12
		E32-T24E 2M	450	220	150	39
	Top-view	E32-T21-S1 2M	510	250	170	44
		E32-TC200BR 2M	1,870	910	700	180
Reflective	Side-view	E32-D24R 2M	68	28	20	5
		E32-D24-S2 2M	150	64	45	13
	Top-view	E32-D43M 1M	29	12	8	2
		E32-D331 2M	13	5	4	1
		E32-D33 2M	68	28	20	5
		E32-D32-S1 0.5M	68	28	18	5
		E32-D31-S1 0.5M	68	28	20	5
		E32-DC200F4R 2M	130	57	40	11
		E32-D22-S1 2M	220	96	72	19
		E32-D21-S3 2M	220	96	72	19
		E32-DC200BR 2M	800	320	240	72
		E32-D25-S3 2M	220	96	72	19

Small-spot, Reflective Models

Type	Spot diameter	Center distance (mm)	Models	Sensing distance (mm)			
				Giga mode	Standard mode	High-speed mode	Super-high-speed mode
Variable spot	0.1 to 0.6 dia.	6 to 15	E32-C42 1M + E39-F3A	Spot diameter of 0.1 to 0.6 mm at 6 to 15 mm.			
	0.3 to 1.6 dia.	10 to 30	E32-C42 1M + E39-F17	Spot diameter of 0.3 to 1.6 mm at 10 to 30 mm.			
Parallel light	4 dia.	0 to 20	E32-C31 2M + E39-F3C	Spot diameter of 4 mm max. at 0 to 20 mm.			
			E32-C21N 2M + E39-F3C	Spot diameter of 0.2 mm at 17 mm.			
Integrated lens	0.1 dia.	5	E32-C42S 1M	Spot diameter of 0.1 mm at 5 mm.			
	6 dia.	50	E32-L15 2M	Spot diameter of 6 mm at 50 mm. (For all the sensing distance modes (40 to 100mm))			
Small-spot	0.1 dia.	7	E32-C41 1M + E39-F3A-5	Spot diameter of 0.1 mm at 7 mm.			
	0.5 dia.		E32-C31 2M + E39-F3A-5	Spot diameter of 0.5 mm at 7 mm.			
			E32-C21N 2M + E39-F3A-5				
	0.2 dia.	17	E32-C41 1M + E39-F3B	Spot diameter of 0.2 mm at 17 mm.			
	0.5 dia.		E32-C31 2M + E39-F3B	Spot diameter of 0.5 mm at 17 mm.			
			E32-C21N 2M + E39-F3B				
	3 dia.	50	E32-CC200 2M + E39-F18	Spot diameter of 3 mm at 50 mm.			
			E32-C11N 2M + E39-F18				

High-power Beam Models

Type	Sensing direction	Aperture angle	Models	Sensing distance (mm)			
				Giga mode	Standard mode	High-speed mode	Super-high-speed mode
Through-beam models with integrated lens	Right-angle	15°	E32-LT11N 2M	4,000 ✻2	2,990	2,300	590
	Top-view	10°	E32-T17L 10M	20,000 ✻1	20,000 ✻1	20,000 ✻1	5,200
		15°	E32-LT11 2M	4,000 ✻2	3,510	2,700	700
			E32-LT11R 2M	4,000 ✻2	2,990	2,300	590
	Side-view	30°	E32-T14 2M	4,000 ✻2	4,000 ✻2	4,000 ✻2	1,160
Through-beam models with lenses	Right-angle	12°	E32-T11N 2M + E39-F1	4,000 ✻2	4,000 ✻2	4,000 ✻2	1,270
		6°	E32-T11N 2M + E39-F16	4,000 ✻2	4,000 ✻2	4,000 ✻2	2,290
	Top-view	12°	E32-T11R 2M + E39-F1	4,000 ✻2	4,000 ✻2	4,000 ✻2	1,270
		6°	E32-T11R 2M + E39-F16	4,000 ✻2	4,000 ✻2	4,000 ✻2	2,290
	Side-view	60°	E32-T11R 2M + E39-F2	1,680	810	630	160
	Top-view	12°	E32-T11 2M + E39-F1	4,000 ✻2	4,000 ✻2	4,000 ✻2	1,630
		6°	E32-T11 2M + E39-F16	4,000 ✻2	4,000 ✻2	4,000 ✻2	2,940
	Side-view	60°	E32-T11 2M + E39-F2	2,170	1,050	810	210
	Top-view	12°	E32-T51R 2M + E39-F1	4,000 ✻2	2,850	2,190	570
		6°	E32-T51R 2M + E39-F16	4,000 ✻2	4,000 ✻2	4,000 ✻2	1,830
	Side-view	60°	E32-T51R 2M + E39-F2	1,430	690	530	130
	Top-view	12°	E32-T81R-S 2M + E39-F1	4,000 ✻2	3,270	2,520	650
		6°	E32-T81R-S 2M + E39-F16	4,000 ✻2	4,000 ✻2	4,000 ✻2	1,170
	Side-view	60°	E32-T81R-S 2M + E39-F2	860	420	320	84
	Top-view	12°	E32-T61-S 2M + E39-F1	4,000 ✻2	4,000 ✻2	4,000 ✻2	1,090
		6°	E32-T61-S 2M + E39-F16	4,000 ✻2	4,000 ✻2	4,000 ✻2	1,960
	Side-view	60°	E32-T61-S 2M + E39-F2	1,440	700	540	140
	Top-view	12°	E32-T51 2M + E39-F1-33	4,000 ✻2	2,990	2,300	590
		6°	E32-T51 2M + E39-F16	4,000 ✻2	4,000 ✻2	4,000 ✻2	3,270
Reflective models with integrated lens	Top-view	4°	E32-D16 2M	40 to 4,000 ✻2	40 to 2,100	40 to 1,350	40 to 480

✻1. The fiber length is 10 m on each side, so the sensing distance is given as 20,000 mm.
✻2. The fiber length is 2 m on each side, so the sensing distance is given as 4,000 mm.

Narrow View Models

Sensing method	Sensing direction	Aperture angle	Models	Sensing distance (mm)			
				Giga mode	Standard mode	High-speed mode	Super-high-speed mode
Through-beam	Side-view	1.5°	E32-A03 2M	3,210	1,560	1,200	310
			E32-A03-1 2M	3,210	1,560	1,200	310
		3.4°	E32-A04 2M	1,200	580	450	110
		4°	E32-T24SR 2M	3,930	1,910	1,460	380
			E32-T24S 2M	4,000 ✻1	2,270	1,740	450
			E32-T22S 2M	4,000 ✻1	3,250	2,500	650

✻1. The fiber length is 2 m on each side, so the sensing distance is given as 4,000 mm.

Models for Detection without Background Interference

Sensing method	Sensing direction	Model	Sensing distance (mm)			
			Giga mode	Standard mode	High-speed mode	Super-high-speed mode
Limited-reflective	Flat-view	E32-L16-N 2M	0 to 15			0 to 12
		E32-L24S 2M	0 to 4			
	Side-view	E32-L25L 2M	5.4 to 9 (center 7.2)			

Transparent Object Detection (Retro-reflective Models)

Sensing method	Feature	Size	Models	Sensing distance (mm)			
				Giga mode	Standard mode	High-speed mode	Super-high-speed mode
Retro-reflective	Film detection	M3	E32-C31 2M+ E39-F3R+E39-RP37	230		200	---
	Square	---	E32-R16 5M	150 to 1,500			
	Threaded	M6	E32-R21 2M	10 to 250			
	Hex-shaped		E32-LR11NP 2M+ E39-RP1	1,280	1,080	1,000	360

Transparent Object Detection (Limited-reflective Models)

Sensing method	Feature	Sensing direction	Model	Sensing distance (mm)			
				Giga mode	Standard mode	High-speed mode	Super-high-speed mode
Limited-reflective	Small size	Flat-view	E32-L24S 2M	0 to 4			
	Standard		E32-L16-N 2M	0 to 15			0 to 12
	Glass substrate alignment, 70°C		E32-A08 2M	15 to 25			---
	Standard/ long-distance		E32-A12 2M	12 to 30			---
	Side-view form	Side-view	E32-L25L 2M	5.4 to 9 (center 7.2)			
	Glass substrate mapping, 70°C	Top-view	E32-A09 2M	15 to 38			---

Chemical-resistant, Oil-resistant Models

Sensing method	Type	Sensing direction	Model	Sensing distance (mm)			
				Giga mode	Standard mode	High-speed mode	Super-high-speed mode
Through-beam	Oil-resistant	Right-angle	E32-T11NF 2M	4,000 ✻1	4,000 ✻1	4,000 ✻1	1,340
	Chemical/oil-resistant	Top-view	E32-T12F 2M	4,000 ✻1	4,000 ✻1	4,000 ✻1	1,040
			E32-T11F 2M	4,000 ✻1	3,380	2,600	670
		Side-view	E32-T14F 2M	1,340	650	500	130
	Chemical/oil-resistant at 150°C	Top-view	E32-T51F 2M	4,000 ✻1	2,340	1,800	460
Reflective	Semiconductors: Cleaning, developing, and etching; 60°C	Top-view	E32-L11FP 2M	8 to 20 mm from tip of lens (Recommended sensing distance: 11 mm), 19 to 31 mm from center of mounting hole A (Recommended sensing distance: 22 mm)			
	Semiconductors: Resist stripping; 85°C		E32-L11FS 2M	8 to 20 mm from tip of lens (Recommended sensing distance: 11 mm), 32 to 44 mm from center of mounting hole A (Recommended sensing distance: 35 mm)			
	Chemical/oil-resistant		E32-D12F 2M	--- ✻2	170	130	39
	Chemical-resistant cable		E32-D11U 2M	800	320	240	72

✻1. The fiber length is 2 m on each side, so the sensing distance is given as 4,000 mm.
✻2. Even if there is no sensing object, the Sensor will detect light that is reflected by the fluororesin.

Bending-resistant Models

Sensing method	Size	Model	Sensing distance (mm)			
			Giga mode	Standard mode	High-speed mode	Super-high-speed mode
Through-beam	1.5 dia.	E32-T22B 2M	750	370	220	65
	M3	E32-T21 2M	670	330	220	58
	M4	E32-T11 2M	2,410	1,170	900	230
	Square	E32-T25XB 2M	500	250	170	43
Reflective	1.5 dia.	E32-D22B 2M	130	57	40	11
	M3	E32-D21 2M	130	57	40	11
	3 dia.	E32-D221B 2M	310	120	90	26
	M4	E32-D21B 2M	310	120	90	26
	M6	E32-D11 2M	800	320	240	72
	Square	E32-D25XB 2M	220	92	60	18

Heat-resistant Models

Sensing method	Heat-resistant temperature	Model	Sensing distance (mm)			
			Giga mode	Standard mode	High-speed mode	Super-high-speed mode
Through-beam	100°C	E32-T51R 2M	1,500	720	560	140
	150°C	E32-T51 2M	2,680	1,300	1,000	260
	200°C	E32-T81R-S 2M	960	460	360	93
	350°C	E32-T61-S 2M	1,600	780	600	150
Reflective	100°C	E32-D51R 2M	640	250	190	57
	150°C	E32-D51 2M	1,070	430	320	96
	200°C	E32-D81R-S 2M	380	150	120	34
	300°C	E32-A08H2 2M	15 to 25			---
		E32-A09H2 2M	20 to 30 (center 25)			---
	350°C	E32-D61-S 2M	380	150	120	34
	400°C	E32-D73-S 2M	250	100	80	22

Area Detection Models

Sensing method	Type	Sensing width	Model	Sensing distance (mm)			
				Giga mode	Standard mode	High-speed mode	Super-high-speed mode
Through-beam	Area	11 mm	E32-T16PR 2M	3,010	1,460	1,120	290
			E32-T1s6JR 2M	2,610	1,260	970	250
		30 mm	E32-T16WR 2M	4,000 ✻1	2,240	1,720	440
Reflective	Array	11 mm	E32-D36P1 2M	670	270	200	60

✻1. The fiber length is 2 m on each side, so the sensing distance is given as 4,000 mm.

Liquid-level Detection Models

Sensing method	Tube diameter	Feature	Model	Sensing distance (mm)			
				Giga mode	Standard mode	High-speed mode	Super-high-speed mode
Tube-mounting	3.2, 6.4, or 9.5 dia	Stable residual quantity detection	E32-A01 5M	Applicable tube: Transparent tube with a diameter of 3.2, 6.4, or 9.5 mm, Recommended wall thickness: 1 mm			
	8 to 10 dia	Mounting at multiple levels	E32-L25T 2M	Applicable tube: Transparent tube with a diameter of 8 to 10 mm, Recommended wall thickness: 1 mm			
	No restrictions	Large tubes	E32-D36T 2M	Applicable tube: Transparent tube (no restrictions on diameter)			
Liquid contact (heat-resistant up to 200°C)	---	---	E32-D82F1 4M	Liquid-contact type			

Vacuum-resistant Models

Sensing method	Heat-resistant temperature	Model	Sensing distance (mm)			
			Giga mode	Standard mode	High-speed mode	Super-high-speed mode
Through-beam	120°C	E32-T51V 1M	690	330	260	67
		E32-T51V 1M+E39-F1V	2,000 ✻1	1,760	1,360	350
	200°C	E32-T84SV 1M	1,710	830	640	160

✻1. The fiber length is 1 m on each side, so the sensing distance is given as 2,000 mm.

Models for FPD, Semiconductors, and Solar Cells

Sensing method	Application	Operating temperature	Model	Sensing distance (mm)			
				Giga mode	Standard mode	High-speed mode	Super-high-speed mode
Limited-reflective	Glass presence detection	70°C	E32-L16-N 2M	0 to 15			0 to 12
	Glass substrate alignment		E32-A08 2M	15 to 25			---
		300°C	E32-A08H2 2M	15 to 25			---
	Glass substrate mapping	70°C	E32-A12 2M	12 to 30			---
			E32-A09 2M	15 to 38			---
		300°C	E32-A09H2 2M	20 to 30 (center 25)			---
	Wet processes: Cleaning, Resist developing and etching	60°C	E32-L11FP 2M	8 to 20 mm from tip of lens (Recommended sensing distance: 11 mm), 19 to 31 mm from center of mounting hole A (Recommended sensing distance: 22 mm)			
	Wet process: Resist stripping	85°C	E32-L11FS 2M	8 to 20 mm from tip of lens (Recommended sensing distance: 11 mm), 32 to 44 mm from center of mounting hole A (Recommended sensing distance: 35 mm)			
Through-beam	Wafer mapping	70°C	E32-A03 2M	3,210	1,560	1,200	310
			E32-A03-1 2M	3,210	1,560	1,200	310
			E32-A04 2M	1,200	580	450	110
			E32-T24SR 2M	3,930	1,910	1,460	380
			E32-T24S 2M	4,000 ✻1	2,270	1,740	450

✻1. The fiber length is 2 m on each side, so the sensing distance is given as 4,000 mm.

I/O Circuit Diagrams

NPN Output

Model	Operation mode	Timing chart	L/D indicator	Output circuit
E3NX-MA11 E3NX-MA6	Light-ON	ch1/ Incident light ch2 No incident light OUT indicator Lit (orange) Not lit Output ON transistor OFF Load Operate (e.g., relay) Reset (Between brown and black (orange) leads)	L lit.	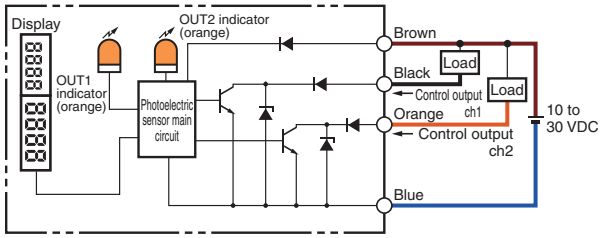
	Dark-ON	ch1/ Incident light ch2 No incident light OUT indicator Lit (orange) Not lit Output ON transistor OFF Load Operate (e.g., relay) Reset (Between brown and black (orange) leads)	D lit.	

PNP Output

Model	Operation mode	Timing chart	L/D indicator	Output circuit
E3NX-MA41 E3NX-MA8	Light-ON	ch1/ Incident light ch2 No incident light OUT indicator Lit (orange) Not lit Output ON transistor OFF Load Operate (e.g., relay) Reset (Between blue and black (orange) leads)	L lit.	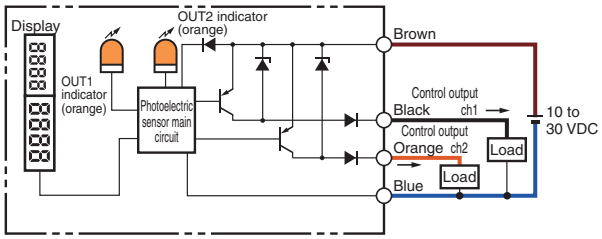
	Dark-ON	ch1/ Incident light ch2 No incident light OUT indicator Lit (orange) Not lit Outputs ON transistor OFF Load Operate (e.g., relay) Reset (Between blue and black (orange) leads)	D lit.	

Nomenclature

E3NX-MA11/MA41/MA6/MA8/MA0

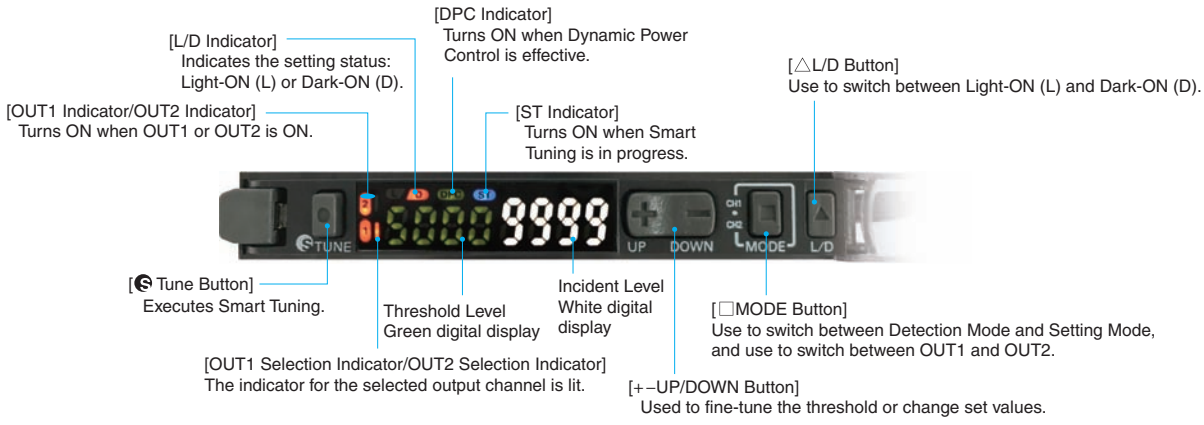

Safety Precautions

Be sure to read the precautions for all models in the website at: http://www.ia.omron.com/.

Warning Indications

⚠WARNING	**Warning level** Indicates a potentially hazardous situation which, if not avoided, will result in minor or moderate injury, or may result in serious injury or death. Additionally, there may be significant property damage.
Precautions for Safe Use	Supplementary comments on what to do or avoid doing, to use the product safely.
Precautions for Correct Use	Supplementary comments on what to do or avoid doing, to prevent failure to operate, malfunction or undesirable effect on product performance.

Meaning of Product Safety Symbols

	**General prohibition** Indicates the instructions of unspecified prohibited action.
	**Caution, explosion** Indicates the possibility of explosion under specific conditions.
	**Caution, fire** Indicates the possibility of fire under specific conditions.

⚠ WARNING

This product is not designed or rated for ensuring safety of persons either directly or indirectly.
Do not use it for such purposes.



Do not use the product with voltage in excess of the rated voltage.
Excess voltage may result in malfunction or fire.



Never use the product with an AC power supply.
Otherwise, explosion may result.



Precautions for Safe Use

The following precautions must be observed to ensure safe operation of the product. Doing so may cause damage or fire.

1. Do not install the product in the following locations.
   - Locations subject to direct sunlight
   - Locations subject to condensation due to high humidity
   - Locations subject to corrosive gas
   - Locations subject to vibration or mechanical shocks exceeding the rated values
   - Locations subject to exposure to water, oil, chemicals
   - Locations subject to steam
   - Locations subject to strong magnetic field or electric field
2. Do not use the product in environments subject to flammable or explosive gases.
3. Do not use the product in any atmosphere or environment that exceeds the ratings.
4. To secure the safety of operation and maintenance, do not install the product close to high-voltage devices and power devices.
5. High-Voltage lines and power lines must be wired separately from this product. Wiring them together or placing them in the same duct may cause induction, resulting in malfunction or damage.
6. Do not apply any load exceeding the ratings. Otherwise damage or fire may result.
7. Do not short the load. Otherwise damage or fire may result.
8. Connect the load correctly.
9. Do not miswire such as the polarity of the power supply.
10. To use this device as connecting with each other, be sure to connect with the same power supply and turn ON the power simultaneously. Using a separate power supply will influence the functions when connecting the devices to use them.
11. Do not use the product if the case is damaged.
12. Burn injury may occur. The product surface temperature rises depending on application conditions, such as the ambient temperature and the power supply voltage. Attention must be paid during operation or cleaning.
13. When setting the sensor, be sure to check safety such as by stopping the equipment.
14. Be sure to turn off the power supply before connecting or disconnecting wires.
15. Do not attempt to disassemble, repair, or modify the product in any way.
16. When disposing of the product, treat it as industrial waste.
17. Do not use the Sensor in water, rain, or outdoors.
18. Use the product in the IP54 enclosure.
19. UL Standard Certification
    Only the Sensors with the Enhanced UL Certification Mark are certified by UL. They are intended to be supplied by a "Class 2 circuit". When used in United States and Canada, please use the same Class 2 source for input and output. The overcurrent protection current rating is 2 A max. They were evaluated as Open type and shall be installed within a enclosure.

Precautions for Correct Use

1. Be sure to mount the unit to the DIN track until it clicks.
2. When using the Amplifier Units with Wire-saving Connectors, attach the protective stickers (provided with E3X-CN-series Connectors) on the unused power pins to prevent electrical shock and short circuiting. When using Amplifier Units with Connectors for Communications Units, attach the protective caps (provided with E3NW-series Sensor Communications Units).

Amplifier Unit with Wire-saving Connector

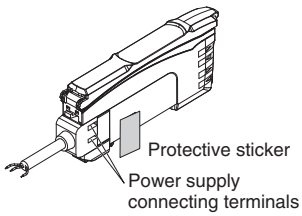

Amplifier Unit with Connector for Communications Unit

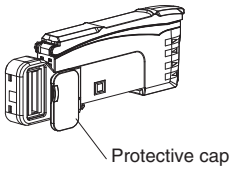

3. The length for the cable extension must be 30 m or less (or less than 10 m for S-mark certified models). Be sure to use a cable of at least 0.3 mm^2 for extension. The power voltage must be 24 to 30 V when connecting amplifier units with extension cable and wire-saving connector.
4. Do not apply the forces on the cable exceeding the following limits:
   Pull: 40 N; torque: 0.1 N·m; pressure: 20 N; bending: 29.4 N
5. Use the E32-□□ Fiber Unit.
6. Do not apply excessive force such as tension, compression or torsion to the Fiber Amplifier Unit with the Fiber Unit fixed to the Fiber Amplifier Unit.
7. Always keep the protective cover in place when using the product. Not doing so may cause malfunction.
8. It may take time until the incident level and measurement value become stable immediately after the power is turned on depending on use environment.
9. The product is ready to operate 200 ms after the power supply is turned ON.
10. The Mobile Console E3X-MC11, E3X-MC11-SV2 and E3X-MC11-S cannot be connected.
11. The mutual interference prevention function does not work when in combination with E3C/E2C/E3X.
12. Excessive incident light cannot be sufficiently handled by the mutual interference prevention function and may cause malfunction. To prevent this, set a higher threshold level.
13. The Communication Unit E3X-DRT21-S, E3X-CRT and E3X-ECT cannot be connected.
14. If using one CH only, do not wire the output cable of the CH unused. The output value might not be correct due to the change of the receiving light amount of the CH unused.
15. If you notice an abnormal condition such as a strange odor, extreme heating of the unit, or smoke, immediately stop using the product, turn off the power, and consult your dealer.
16. Do not use thinner, benzine, acetone, and lamp oil for cleaning.

E3NX-MA

Dimensions

(Unit: mm)
Tolerance class IT16 applies to dimensions in this data sheet unless otherwise specified.

Fiber Amplifier Units

Pre-wired Amplifier Units

E3NX-MA11
E3NX-MA41



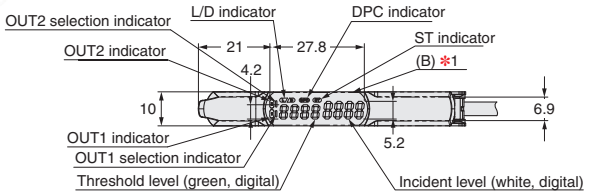

✻1. The Mounting Bracket can also be used on side B.
✻2. Cable Specifications

Model	Outer diameter	No. of conductors	Others
E3NX-MA11	4.0 dia.	4	Conductor cross-section: 0.2 mm² Insulator dia.: 0.9 mm
E3NX-MA41			

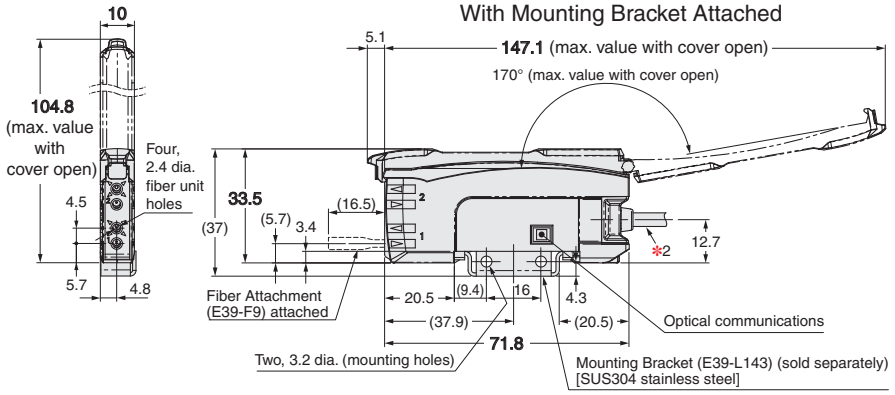

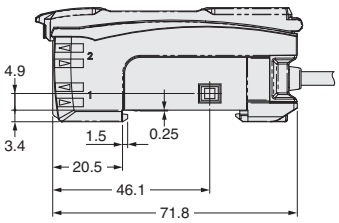

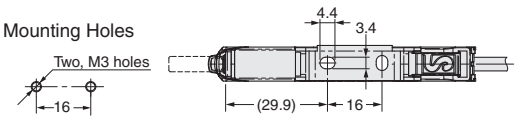

Amplifier Units with Wire-saving Connectors

E3NX-MA6
E3NX-MA8



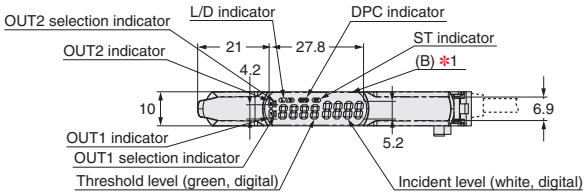

✻1. The Mounting Bracket can also be used on side B.
✻2. Cable Specifications

Model	Outer diameter	No. of conductors
E3X-CN22	4.0 dia.	2
E3X-CN21		4

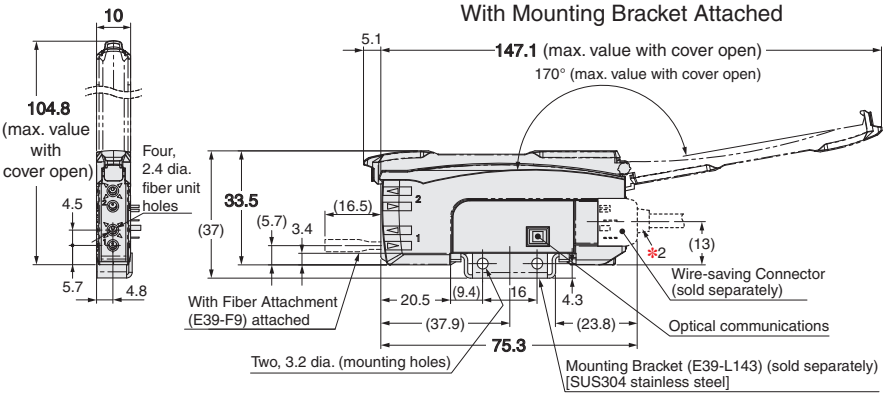

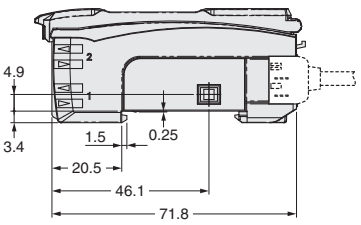

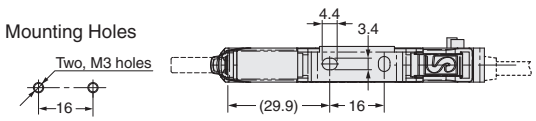

Amplifier Unit with Connector for Sensor Communications Unit
E3NX-MA0

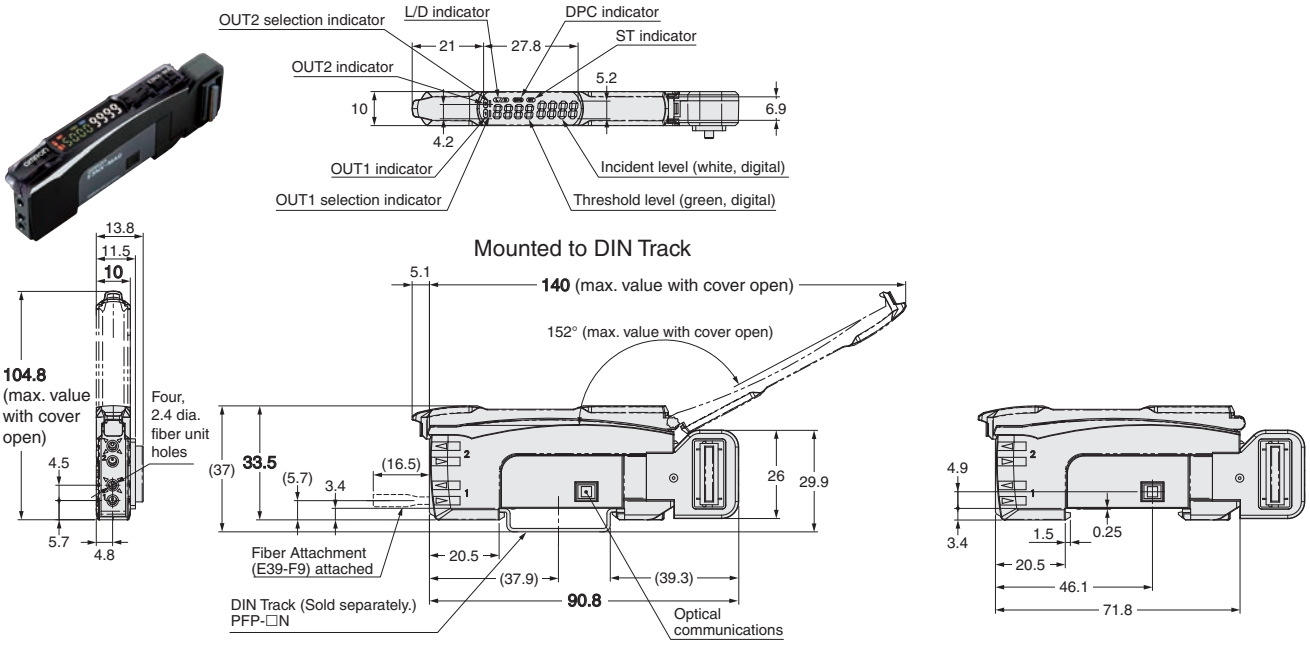

Accessories (Sold Separately)

Wire-saving Connectors

Master Connector
E3X-CN21



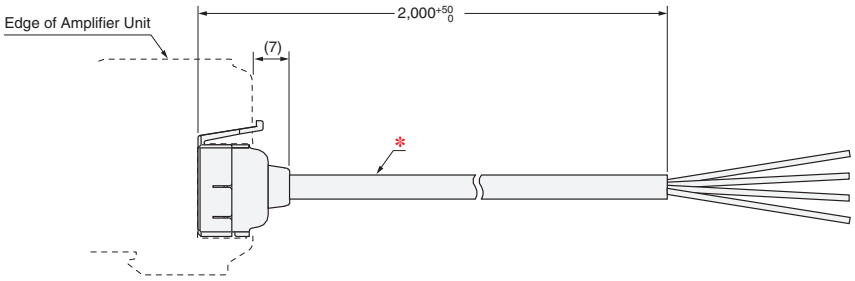

* 4-dia. cable with 4 conductors, Standard cable length: 2 m (Conductor cross-section: 0.2 mm² (AWG24), Insulator diameter: 1.1 mm)

Slave Connector
E3X-CN22



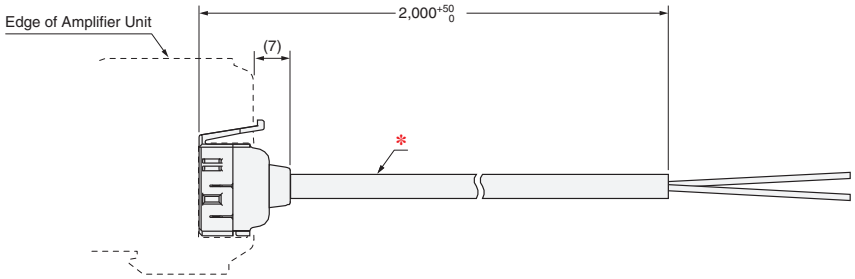

* 4-dia. cable with 2 conductors, Standard cable length: 2 m (Conductor cross-section: 0.2 mm² (AWG24), Insulator diameter: 1.1 mm)

Mounting Bracket
E39-L143

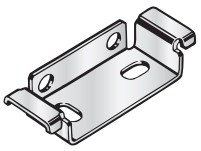

Material: Stainless steel (SUS304)

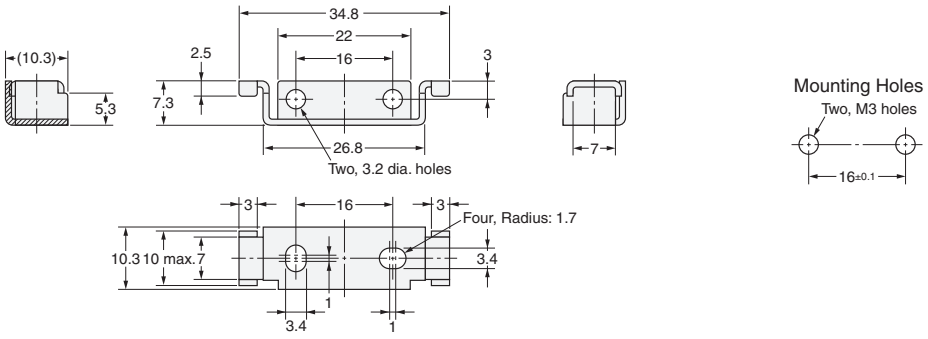

DIN Track
PFP-100N
PFP-50N



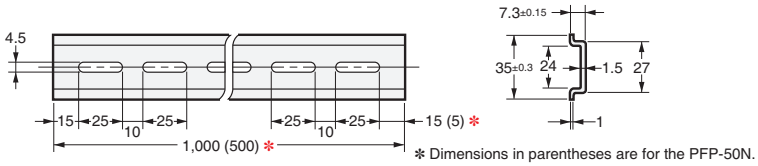

✻ Dimensions in parentheses are for the PFP-50N.

Material: Aluminum

PFP-100N2



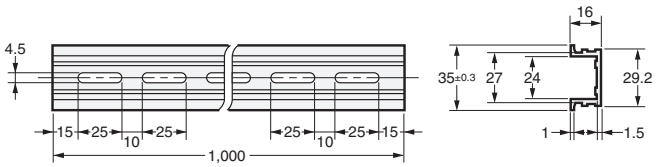

Material: Aluminum

End Plate
PFP-M

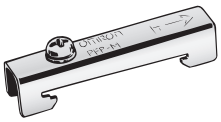

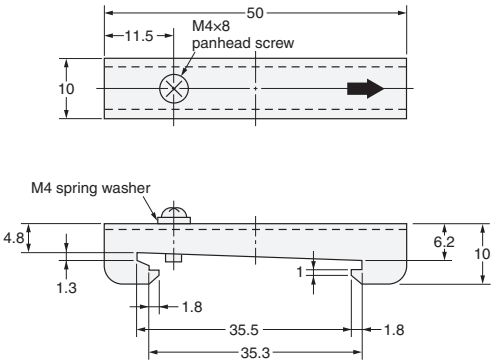

Materials: Iron, zinc plating

Terms and Conditions Agreement

Read and understand this catalog.

Please read and understand this catalog before purchasing the products. Please consult your OMRON representative if you have any questions or comments.

Warranties.

(a) Exclusive Warranty. Omron's exclusive warranty is that the Products will be free from defects in materials and workmanship for a period of twelve months from the date of sale by Omron (or such other period expressed in writing by Omron). Omron disclaims all other warranties, express or implied.

(b) Limitations. OMRON MAKES NO WARRANTY OR REPRESENTATION, EXPRESS OR IMPLIED, ABOUT NON-INFRINGEMENT, MERCHANTABILITY OR FITNESS FOR A PARTICULAR PURPOSE OF THE PRODUCTS. BUYER ACKNOWLEDGES THAT IT ALONE HAS DETERMINED THAT THE PRODUCTS WILL SUITABLY MEET THE REQUIREMENTS OF THEIR INTENDED USE.

Omron further disclaims all warranties and responsibility of any type for claims or expenses based on infringement by the Products or otherwise of any intellectual property right. (c) Buyer Remedy. Omron's sole obligation hereunder shall be, at Omron's election, to (i) replace (in the form originally shipped with Buyer responsible for labor charges for removal or replacement thereof) the non-complying Product, (ii) repair the non-complying Product, or (iii) repay or credit Buyer an amount equal to the purchase price of the non-complying Product; provided that in no event shall Omron be responsible for warranty, repair, indemnity or any other claims or expenses regarding the Products unless Omron's analysis confirms that the Products were properly handled, stored, installed and maintained and not subject to contamination, abuse, misuse or inappropriate modification. Return of any Products by Buyer must be approved in writing by Omron before shipment. Omron Companies shall not be liable for the suitability or unsuitability or the results from the use of Products in combination with any electrical or electronic components, circuits, system assemblies or any other materials or substances or environments. Any advice, recommendations or information given orally or in writing, are not to be construed as an amendment or addition to the above warranty.

See http://www.omron.com/global/ or contact your Omron representative for published information.

Limitation on Liability; Etc.

OMRON COMPANIES SHALL NOT BE LIABLE FOR SPECIAL, INDIRECT, INCIDENTAL, OR CONSEQUENTIAL DAMAGES, LOSS OF PROFITS OR PRODUCTION OR COMMERCIAL LOSS IN ANY WAY CONNECTED WITH THE PRODUCTS, WHETHER SUCH CLAIM IS BASED IN CONTRACT, WARRANTY, NEGLIGENCE OR STRICT LIABILITY.

Further, in no event shall liability of Omron Companies exceed the individual price of the Product on which liability is asserted.

Suitability of Use.

Omron Companies shall not be responsible for conformity with any standards, codes or regulations which apply to the combination of the Product in the Buyer's application or use of the Product. At Buyer's request, Omron will provide applicable third party certification documents identifying ratings and limitations of use which apply to the Product. This information by itself is not sufficient for a complete determination of the suitability of the Product in combination with the end product, machine, system, or other application or use. Buyer shall be solely responsible for determining appropriateness of the particular Product with respect to Buyer's application, product or system. Buyer shall take application responsibility in all cases.

NEVER USE THE PRODUCT FOR AN APPLICATION INVOLVING SERIOUS RISK TO LIFE OR PROPERTY OR IN LARGE QUANTITIES WITHOUT ENSURING THAT THE SYSTEM AS A WHOLE HAS BEEN DESIGNED TO ADDRESS THE RISKS, AND THAT THE OMRON PRODUCT(S) IS PROPERLY RATED AND INSTALLED FOR THE INTENDED USE WITHIN THE OVERALL EQUIPMENT OR SYSTEM.

Programmable Products.

Omron Companies shall not be responsible for the user's programming of a programmable Product, or any consequence thereof.

Performance Data.

Data presented in Omron Company websites, catalogs and other materials is provided as a guide for the user in determining suitability and does not constitute a warranty. It may represent the result of Omron's test conditions, and the user must correlate it to actual application requirements. Actual performance is subject to the Omron's Warranty and Limitations of Liability.

Change in Specifications.

Product specifications and accessories may be changed at any time based on improvements and other reasons. It is our practice to change part numbers when published ratings or features are changed, or when significant construction changes are made. However, some specifications of the Product may be changed without any notice. When in doubt, special part numbers may be assigned to fix or establish key specifications for your application. Please consult with your Omron's representative at any time to confirm actual specifications of purchased Product.

Errors and Omissions.

Information presented by Omron Companies has been checked and is believed to be accurate; however, no responsibility is assumed for clerical, typographical or proofreading errors or omissions.

Note: Do not use this document to operate the Unit.

OMRON Corporation **Industrial Automation Company**

Kyoto, JAPAN **Contact : www.ia.omron.com**

Regional Headquarters

OMRON EUROPE B.V.
Wegalaan 67-69, 2132 JD Hoofddorp
The Netherlands
Tel: (31) 2356-81-300 Fax: (31) 2356-81-388

OMRON ELECTRONICS LLC
2895 Greenspoint Parkway, Suite 200
Hoffman Estates, IL 60169 U.S.A.
Tel: (1) 847-843-7900 Fax: (1) 847-843-7787

OMRON ASIA PACIFIC PTE. LTD.
438B Alexandra Road, #08-01/02 Alexandra
Technopark, Singapore 119968
Tel: (65) 6835-3011 Fax: (65) 6835-3011

OMRON (CHINA) CO., LTD.
Room 2211, Bank of China Tower,
200 Yin Cheng Zhong Road,
PuDong New Area, Shanghai, 200120, China
Tel: (86) 21-6023-0333 Fax: (86) 21-5037-2388

Authorized Distributor:

©OMRON Corporation 2017-2024 All Rights Reserved.
In the interest of product improvement,
specifications are subject to change without notice.

CSM_1_7
Cat. No. E467-E1-03 1124 (1217)