Smart Fiber Amplifier Units

E3NX-FA

CSM_E3NX-FA_DS_E_16_8

A Smart Fiber Amplifier Unit with Ultra-stable Detection and Ultra-easy Setup

- Improved basic performance with 1.5 times the sensing distance and approx. 1/10th the minimum sensing object.*
- Ultra-easy setup with Smart Tuning with a light intensity adjustment range expanded 20 times to 40,000:1. Optimum stable detection achieved with light intensity adjustment even for saturated incident light.
- White on black display characters for high visibility.
- Solution Viewer that shows the passing time and difference in incident levels and Change Finder that allows you to see display values even for fast workpieces.

✻ Compared to the E3X-HD.



For the most recent information on models that have been certified for safety standards, refer to your OMRON website.

⚠ **Refer to the *Safety Precautions* on page 17.**

Ordering Information

Fiber Amplifier Units (Dimensions → pages 19 and 20)

Type	Connecting method	Appearance	Inputs/outputs	Model	
				NPN output	PNP output
Standard models	Pre-wired (2 m)		1 output	**E3NX-FA11 2M**	**E3NX-FA41 2M**
				E3NX-FA11-5 2M ✻1	---
	Wire-saving Connector		1 output	**E3NX-FA6**	**E3NX-FA8**
Advanced models	Pre-wired (2 m)		2 outputs + 1 input	**E3NX-FA21 2M**	**E3NX-FA51 2M**
	Wire-saving Connector		1 output + 1 input	**E3NX-FA7**	**E3NX-FA9**
			2 outputs	**E3NX-FA7TW**	**E3NX-FA9TW**
	M8 Connector		1 output + 1 input	**E3NX-FA24**	**E3NX-FA54**
			2 outputs	---	**E3NX-FA54TW**

✻1. This type can prevent mutual interference for two units in the SHS2 mode.

Type	Connecting method	Appearance	Inputs/outputs	Model	
				NPN output	PNP output
Infrared models	Pre-wired (2 m)		1 output	**E3NX-FAH11 2M**	**E3NX-FAH41 2M**
	Wire-saving Connector		1 output	**E3NX-FAH6**	**E3NX-FAH8**
Analog output models	Pre-wired (2 m)		2 outputs	**E3NX-FA11AN 2M**	**E3NX-FA41AN 2M**
Model for Sensor Communications Unit ✻2	Connector for Sensor Communications Unit		---	**E3NX-FA0**	
				E3NX-FAH0	
	Connector for Sensor Communications Unit Pre-wired (2 m)		1 output	**E3NX-FA10 2M**	**E3NX-FA40 2M**

✻**2.** A Sensor Communications Unit is required if you want to use the Fiber Amplifier Unit on a network.

Accessories (Sold Separately)

Wire-saving Connectors (Required for models for Wire-saving Connectors.) (Dimensions → page 21)

Connectors are not provided with the Fiber Amplifier Unit and must be ordered separately. Note: Protective stickers are provided.

Type	Appearance	Cable length	No. of conductors	Model	Applicable Fiber Amplifier Units
Master Connector		2 m	4	**E3X-CN21**	**E3NX-FA7 E3NX-FA7TW E3NX-FA9 E3NX-FA9TW**
Slave Connector			2	**E3X-CN22**	
Master Connector			3	**E3X-CN11**	**E3NX-FA6 E3NX-FA8 E3NX-FAH6 E3NX-FAH8**
Slave Connector			1	**E3X-CN12**	

Sensor I/O Connectors (Required for models for M8 Connectors.) (Dimensions → page 21)

Connectors are not provided with the Fiber Amplifier Unit and must be ordered separately.

Size	Cable	Appearance		Cable type		Model
M8	Standard cable	Straight	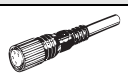	2m	4-wire	XS3F-M421-402-A
				5m		XS3F-M421-405-A
		L-shaped		2m		XS3F-M422-402-A
				5m		XS3F-M422-405-A

Mounting Bracket (Dimensions → page 22)

A Mounting Bracket is not provided with the Fiber Amplifier Unit. It must be ordered separately as required.

Appearance	Model	Quantity
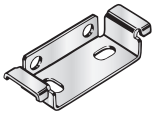	**E39-L143**	1

DIN Track (Dimensions → page 22)

A DIN Track is not provided with the Fiber Amplifier Unit. It must be ordered separately as required.

Appearance	Type	Model	Quantity
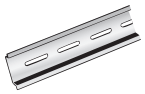	Shallow type, total length: 1 m	**PFP-100N**	1
	Shallow type, total length: 0.5 m	**PFP-50N**	
	Deep type, total length: 1 m	**PFP-100N2**	

End Plate (Dimensions → page 22)

Two End Plates are provided with the Sensor Communications Unit. End Plates are not provided with the Fiber Amplifier Unit. They must be ordered separately as required.

Appearance	Model	Quantity
	**PFP-M**	1

Cover

Attach these Covers to Amplifier Units.
Order a Cover when required, e.g., if you lose the covers.

Appearance	Model	Quantity
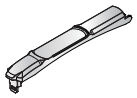	**E39-G25 FOR E3NX-FA**	1

Related Products

Sensor Communications Units

Type	Appearance	Model
Sensor Communications Unit for EtherCAT		**E3NW-ECT**
Sensor Communications Unit for CompoNet		**E3NW-CRT ✻1**
Sensor Communications Unit for CC-Link		**E3NW-CCL**
Distributed Sensor Unit ✻2		**E3NW-DS**

Refer to your OMRON website for details.
✻1. E3NX-FAH0 can not be connected.
✻2. The Distributed Sensor Unit can be connected to any of the Sensor Communications Units.

EtherCAT® is a registered trademark and patented technology, licensed by Beckhoff Automation GmbH, Germany.
CompoNet is a registered trademark of the ODVA.
CC-Link is a registered trademark of Mitsubishi Electric Corporation. The trademark is managed by the CC-Link Partner Association.

Ratings and Specifications

Standard models/ Advanced models/ Infrared models

Item		Type	Standard models			Advanced models					Infrared models	
		NPN output	E3NX-FA11	E3NX-FA6	E3NX-FA11-5 ✻1	E3NX-FA21	E3NX-FA7	E3NX-FA7TW	E3NX-FA24	---	E3NX-FAH11	E3NX-FAH6
		PNP output	E3NX-FA41	E3NX-FA8	---	E3NX-FA51	E3NX-FA9	E3NX-FA9TW	E3NX-FA54	E3NX-FA54TW	E3NX-FAH41	E3NX-FAH8
		Connecting method	Pre-wired	Wire-saving Connector	Pre-wired	Pre-wired	Wire-saving Connector		M8 Connector		Pre-wired	Wire-saving Connector
Inputs/ outputs	Outputs		1 output			2 outputs	1 output	2 outputs	1 output	2 outputs	1 outputs	
	External inputs		---			1 input	1 input	---	1 input	---	---	
Light source (wavelength)			Red, 4-element LED (625 nm)								Infrared LED (870nm)	
Power supply voltage			10 to 30 VDC, including 10% ripple (p-p)									
Power consumption ✻2			At Power supply voltage of 24 VDC Standard Models: Normal mode : 840 mW max. (Current consumption at 35 mA max.) Eco function ON : 650 mW max. (Current consumption at 27 mA max.) Eco function LO : 750 mW max. (Current consumption at 31 mA max.) Advanced Models or Model for Sensor Communications Unit: Normal mode : 920 mW max. (Current consumption at 38 mA max.) Eco function ON : 680 mW max. (Current consumption at 28 mA max.) Eco function LO : 800 mW max. (Current consumption at 33 mA max.) Infrared models: Normal mode : 1080 mW max. (Current consumption at 45 mA max.) Eco function ON : 920 mW max. (Current consumption at 38 mA max.) Eco function LO : 1020 mW max. (Current consumption at 42 mA max.)									
Control output			Load power supply voltage: 30 VDC max., open-collector output (depends on the NPN/PNP output format) Load current: Groups of 1 to 3 Amplifier Units: 100 mA max., Groups of 4 to 30 Amplifier Units: 20 mA max. (Residual voltage: At load current of less than 10 mA: 1 V max. At load current of 10 to 100 mA: 2 V max.) OFF current: 0.1 mA max.									
External inputs			---			Refer to ✻3.		---	Refer to ✻3.	---		
Indicators			7-segment displays (Sub digital display: green, Main digital display: white) Display direction: Switchable between normal and reversed. OUT indicator (orange), L/D indicator (orange), ST indicator (blue), DPC indicator (green), and OUT selection indicator (orange, only on models with 2 outputs)									
Protection circuits			Power supply reverse polarity protection, output short-circuit protection, and output reve rse polarity protection									
Response time	Super-high-speed mode (SHS)		Operate or reset for model with 1 output: 30 µs (Super High Speed mode (SHS2) of E3NX-FA11-5 is 60 µs each), with 2 outputs: 32 µs									
	High-speed mode (HS)		Operate or reset: 250 µs									
	Standard mode (Stnd)		Operate or reset: 1 ms									
	Giga-power mode (GIGA)		Operate or reset: 16 ms									
Sensitivity adjustment			Smart Tuning (2-point tuning, full auto tuning, position tuning, maximum sensitivity tuning, power tuning, or percentage tuning (-99% to 99%)) or manual adjustment									
Maximum connectable Units			30									
No. of Units for mutual interference prevention ✻4	Super-high-speed mode (SHS)		0 **Note:** 2 units when the detection mode is set to Super High Speed mode (SHS2), and for other models, the mutual interference prevention function is disabled.									
	High-speed mode (HS)		10									
	Standard mode (Stnd)		10									
	Giga-power mode (GIGA)		10									

✻1. This type can prevent mutual interference for two units in the SHS2 mode.

✻2. At Power supply voltage of 10 to 30 VDC

Standard Models:
Normal mode : 990 mW max. (Current consumption: 33 mA max. at 30 VDC, 65 mA max. at 10 VDC)
Eco function ON : 780 mW max. (Current consumption: 26 mA max. at 30 VDC, 42 mA max. at 10 VDC)
Eco function LO : 840 mW max. (Current consumption: 28 mA max. at 30 VDC, 45 mA max. at 10 VDC)

Advanced Models:
Normal mode : 1,020 mW max. (Current consumption: 34 mA max. at 30 VDC, 67 mA max. at 10 VDC)
Eco function ON : 810 mW max. (Current consumption: 27 mA max. at 30 VDC, 44 mA max. at 10 VDC)
Eco function LO : 870 mW max. (Current consumption: 29 mA max. at 30 VDC, 48 mA max. at 10 VDC)

Infrared models:
Normal mode : 1,260 mW max. (Current consumption: 42 mA max. at 30 VDC, 80 mA max. at 10 VDC)
Eco function ON : 1,050 mW max. (Current consumption: 35 mA max. at 30 VDC, 60 mA max. at 10 VDC)
Eco function LO : 1,140 mW max. (Current consumption: 38 mA max. at 30 VDC, 70 mA max. at 10 VDC)

✻3. The following details apply to the input.

	Contact input (relay or switch)	Non-contact input (transistor)	Input time ✻3-1
NPN	ON: Shorted to 0 V (Sourcing current: 1 mA max.). OFF: Open or shorted to Vcc.	ON: 1.5 V max. (Sourcing current: 1 mA max.) OFF: Vcc – 1.5 V to Vcc (Leakage current: 0.1 mA max.)	ON: 9 ms min. OFF: 20 ms min.
PNP	ON: Shorted to Vcc (Sinking current: 3 mA max.). OFF: Open or shorted to 0 V.	ON: Vcc – 1.5 V to Vcc (Sinking current: 3 mA max.) OFF: 1.5 V max. (Leakage current: 0.1 mA max.)	

✻3-1. Input time is 25 ms (ON)/(OFF) only when (in tUnE) or (in PtUn) input is selected.

✻4. The tuning will not change the number of units. The least unit count among the mutual interference prevention units of E3NX and E3NC. Check the mutual interference prevention unit count and response speed of each model.

Item		Type	Standard models			Advanced models					Infrared models	
		NPN output	E3NX-FA11	E3NX-FA6	E3NX-FA11-5 ✻1	E3NX-FA21	E3NX-FA7	E3NX-FA7TW	E3NX-FA24	---	E3NX-FAH11	E3NX-FAH6
		PNP output	E3NX-FA41	E3NX-FA8	---	E3NX-FA51	E3NX-FA9	E3NX-FA9TW	E3NX-FA54	E3NX-FA54TW	E3NX-FAH41	E3NX-FAH8
		Connecting method	Pre-wired	Wire-saving Connector	Pre-wired	Pre-wired	Wire-saving Connector		M8 Connector		Pre-wired	Wire-saving Connector
Functions	Automatic power control (APC)		Always enabled.									
	Dynamic power control (DPC)		Provided									
	Timer		Select from timer disabled, OFF-delay, ON-delay, one-shot, or ON-delay + OFF-delay timer: 1 to 9,999 ms									
	Zero reset		Negative values can be displayed. (Threshold value is shifted.)									
	Resetting settings ✻5		Select from initial reset (factory defaults) or user reset (saved settings).									
	Eco mode ✻6		Select from OFF (digital display lit), Eco ON (digital display not lit), and Eco LO (digital display dimmed).									
	Bank switching		Select from banks 1 to 4.									
	Power tuning		Select from ON, OFF or Execution on power-up.								Select from ON or OFF.	
	Output 1		Select from normal detection mode, area detection mode or differential detection mode.								Select from normal detection mode or area detection mode.	
	Output 2		---			Select from normal detection mode, alarm output mode, error output mode or differential detection mode.	---	Select from normal detection mode, alarm output mode, error output mode or differential detection mode.	---	Select from normal detection mode, alarm output mode, error output mode or differential detection mode.	---	
	External input		---			Select from input OFF, tuning, power tuning, emission OFF, Sensor OFF, zero reset, or bank switching.		---	Select from input OFF, tuning, power tuning, emission OFF, Sensor OFF, zero reset, or bank switching.	---		
	Hysteresis width		Select from standard setting or user setting. For a user setting, the hysteresis width can be set from 0 to 9,999.									
Ambient illumination (Receiver side)			Incandescent lamp: 20,000 lx max., Sunlight: 30,000 lx max.									
Ambient temperature range ✻7			Operating: Groups of 1 or 2 Amplifier Units: –25 to 55°C, Groups of 3 to 10 Amplifier Units: –25 to 50°C, Groups of 11 to 16 Amplifier Units: –25 to 45°C, Groups of 17 to 30 Amplifier Units: –25 to 40°C Storage: –30 to 70°C (with no icing or condensation)									
Ambient humidity range			Operating and storage: 35 to 85% (with no condensation) within the surrounding air temperature range shown above									
Altitude			2,000 m max.									
Installation environment			Pollution degree 3									
Insulation resistance			20 MΩ min. (at 500 VDC)									
Dielectric strength			1,000 VAC at 50/60 Hz for 1 min									
Vibration resistance (destruction)			10 to 55 Hz with a 1.5-mm double amplitude for 2 hours each in X, Y, and Z directions									
Shock resistance (destruction)			500 m/s² for 3 times each in X, Y, and Z directions									
Weight (packed state/ Sensor only)			Approx. 115 g/ approx. 75 g	Approx. 60g/ approx. 20g	Approx. 115 g/ approx. 75 g	Approx. 115 g/ approx. 75 g	Approx. 60g/ approx. 20g		Approx. 65 g/ approx. 25 g		Approx. 115 g/ approx. 75 g	Approx. 60g/ approx. 20g
Materials	Case		Polycarbonate (PC)									
	Cover		Polycarbonate (PC)									
	Cable		PVC									
MTTFd (Year)			231	228	223	219	114	219	220	212	202	364
Accessories			Instruction Manual									

✻5. The bank is not reset by the user reset function or saved by the user save function.
✻6. Eco LO is supported for Amplifier Units manufactured in July 2014 or later.
✻7. When the number of connected units is 11 or more, the ambient temperature is less than 50°C.

Analog output models/ Model for Sensor Communications Unit

Item		Type	Analog output models	Model for Sensor Communications Unit		
		NPN output	E3NX-FA11AN	E3NX-FA10	E3NX-FA0	E3NX-FAH0
		PNP output	E3NX-FA41AN	E3NX-FA40		
		Connecting method	Pre-wired	Connector for Sensor Communications Unit Pre-wired	Connector for Sensor Communications Unit	
Inputs/ outputs	Outputs		2 outputs	1 outputs	--- ✻1	
	External inputs		---	---		
Light source (wavelength)			Red, 4-element LED (625 nm)			Infrared LED (870nm)
Power supply voltage			10 to 30 VDC, including 10% ripple (p-p)	Supplied from the connector through the communication units.		
Power consumption ✻2			At Power supply voltage of 24 VDC Normal mode : 960 mW max. (Current consumption at 40 mA max.) Eco function ON: 770 mW max. (Current consumption at 32 mA max.) Eco function LO : 870 mW max. (Current consumption at 36 mA max.)	At Power supply voltage of 24 VDC Normal mode : 920 mW max. (Current consumption at 38 mA max.) Eco function ON: 680 mW max. (Current consumption at 26 mA max.) Eco function LO : 800 mW max. (Current consumption at 33 mA max.)		At Power supply voltage of 24 VDC Normal mode : 1,080 mW max. (Current consumption at 45 mA max.) Eco function ON: 920 mW max. (Current consumption at 38 mA max.) Eco function LO : 1,020 mW max. (Current consumption at 42 mA max.)
Control output			Load power supply voltage: 30 VDC max., open-collector output (depends on the NPN/PNP output format) Load current: Groups of 1 to 3 Amplifier Units: 100 mA max., Groups of 4 to 30 Amplifier Units:20 mA max. (Residual voltage: At load current of less than 10 mA: 1 V max. At load current of 10 to 100 mA: 2 V max.) OFF current: 0.1 mA max.		---	
Analog output (reference value)			Voltage output: 1-5 VDC (10 kΩ or more connected load), temperature characteristics: 0.3% F.S. / °C	---		
Indicators			7-segment displays (Sub digital display: green, Main digital display: white) Display direction: Switchable between normal and reversed. OUT indicator (orange), L/D indicator (orange), ST indicator (blue), DPC indicator (green), and OUT selection indicator (orange, only on models with 2 outputs)			
Protection circuits			Power supply reverse polarity protection, output short-circuit protection, and output reverse polarity protection		Power supply reverse polarity protection and output short-circuit protection	
Control output Response time	Super-high-speed mode (SHS)		Operate or reset: 80 µs	Operate or reset: 32 µs		
	High-speed mode (HS)		Operate or reset: 250µs	Operate or reset: 250 µs		
	Standard mode (Stnd)		Operate or reset: 1 ms	Operate or reset: 1 ms		
	Giga-power mode (GIGA)		Operate or reset: 16 ms	Operate or reset: 16 ms		
Sensitivity adjustment			Smart Tuning (2-point tuning, full auto tuning, position tuning, maximum sensitivity tuning, power tuning, percentage tuning (–99% to 99%)) or manual adjustment			
Maximum connectable Units			30	16	With E3NW-ECT: 30 units (When connected to an OMRON NJ-series Controller.) With E3NW-CRT: 16 units (Note: E3NX-FAH0 can not be connected.) With E3NW-CCL: 16 units	
No. of Units for mutual interference prevention ✻3	Super-high-speed mode (SHS)		0 (The mutual interference prevention function is disabled if the detection mode is set to super-high-speed mode.)			
	High-speed mode (HS)		10			
	Standard mode (Stnd)		10			
	Giga-power mode (GIGA)		10			

✻1. Two sensor outputs are allocated in the programmable logic controller PLC I/O table.
PLC operation via Communications Unit enables reading detected values and changing settings.

✻2. At Power supply voltage of 10 to 30 VDC
Analog output models:
Normal mode : 1,080 mW max. (Current consumption: 36 mA max. at 30 VDC, 75 mA max. at 10 VDC)
Eco function ON : 840 mW max. (Current consumption: 28 mA max. at 30 VDC, 55 mA max. at 10 VDC)
Eco function LO : 960 mW max. (Current consumption: 32 mA max. at 30 VDC, 65 mA max. at 10 VDC)

✻3. The tuning will not change the number of units.
The least unit count among the mutual interference prevention units of E3NX and E3NC.
Check the mutual interference prevention unit count and response speed of each model.

Item		Type	Analog output models	Model for Sensor Communications Unit		
		NPN output	E3NX-FA11AN	E3NX-FA10	E3NX-FA0	E3NX-FAH0
		PNP output	E3NX-FA41AN	E3NX-FA40		
		Connecting method	Pre-wired	Connector for Sensor Communications Unit Pre-wired	Connector for Sensor Communications Unit	
Functions	Automatic power control (APC)		Always enabled.			
	Dynamic power control (DPC)		Provided			
	Timer		Select from timer disabled, OFF-delay, ON-delay, one-shot, or ON-delay + OFF-delay timer: 1 to 9,999 ms			
	Zero reset		Negative values can be displayed. (Threshold value is shifted.)			
	Resetting settings ✻4		Select from initial reset (factory defaults) or user reset (saved settings).			
	Eco mode		Select from OFF (digital display lit), Eco ON (digital display not lit), and Eco LO (digital display dimmed).			
	Bank switching		Select from banks 1 to 4.			
	Sensor OFF setting		---		Select from ON or OFF.	---
	Power tuning		Select from ON or OFF.			
	Output 1		Select from normal detection mode, area detection mode or differential detection mode (E3NX-FA10/40 only).			
	Output 2		Select from Analog scaling or Analog offset.	---	Select from normal detection mode, alarm output mode, error output mode or differential detection mode (E3NX-FA0 only).	
	Hysteresis width		Select from standard setting or user setting. For a user setting, the hysteresis width can be set from 0 to 9,999.			
Ambient illumination (Receiver side)			Incandescent lamp: 20,000 lx max., Sunlight: 30,000 lx max.			
Ambient temperature range ✻5			Operating: Groups of 1 or 2 Amplifier Units: -25 to 55°C, Groups of 3 to 10 Amplifier Units: -25 to 50°C, Groups of 11 to 16 Amplifier Units: -25 to 45°C, Groups of 17 to 30 Amplifier Units: -25 to 40°C Storage: -30 to 70°C (with no icing or condensation)	Operating: Groups of 1 or 2 Amplifier Units: 0 to 55°C, Groups of 3 to 10 Amplifier Units: 0 to 50°C, Groups of 11 to 16 Amplifier Units: 0 to 45°C Storage: -30 to 70°C (with no icing or condensation)	Operating: Groups of 1 or 2 Amplifier Units: 0 to 55°C, Groups of 3 to 10 Amplifier Units: 0 to 50°C, Groups of 11 to 16 Amplifier Units: 0 to 45°C, Groups of 17 to 30 Amplifier Units: 0 to 40°C Storage: –30 to 70°C (with no icing or condensation)	
Ambient humidity range			Operating and storage: 35 to 85% (with no condensation) within the surrounding air temperature range shown above			
Altitude			2,000 m max.			
Installation environment			Pollution degree 3			
Insulation resistance			20 MΩ min. (at 500 VDC)			
Dielectric strength			1,000 VAC at 50/60 Hz for 1 min			
Vibration resistance (destruction)			10 to 55 Hz with a 1.5-mm double amplitude for 2 hours each in X, Y, and Z directions			
Shock resistance (destruction)			500 m/s^2 for 3 times each in X, Y, and Z directions	150 m/s^2 for 3 times each in X, Y, and Z directions		
Weight (packed state/Sensor only)			Approx. 115 g/approx. 75 g	Approx. 95 g/approx. 45 g	Approx. 65 g/approx. 25 g	Approx. 65 g/approx. 25 g
Materials	Case		Polycarbonate (PC)			
	Cover		Polycarbonate (PC)			
	Cable		PVC			
MTTFd (Year)			214	---		
Accessories			Instruction Manual			

✻4. The bank is not reset by the user reset function or saved by the user save function.
✻5. When the number of connected units is 11 or more, the ambient temperature is less than 50°C.

Sensing Distances

Standard models/ Advanced models/ Analog output models

Threaded Models

Sensing method	Sensing direction	Size	Model	Sensing distance (mm)			
				Giga mode	Standard mode	High-speed mode	Super-high-speed mode
Through-beam	Right-angle	M4	E32-T11N 2M	3,000	1,500	1,050	280
			E32-LT11N 2M	4,000 ✻1	4,000 ✻1	3,450	920
	Straight		E32-T11R 2M	3,000	1,500	1,050	280
			E32-LT11 2M	4,000 ✻1	4,000 ✻1	4,000 ✻1	1,080
			E32-LT11R 2M	4,000 ✻1	4,000 ✻1	3,450	920
Reflective	Right-angle	M3	E32-C31N 2M	160	75	69	14
			E32-C21N 2M	440	190	130	39
		M4	E32-D21N 2M	1,260	520	360	100
		M6	E32-C11N 2M	1,170	520	480	100
			E32-LD11N 2M	1,260	520	360	100
	Straight	M3	E32-D21R 2M	210	90	60	16
			E32-C31 2M	490	220	150	44
			E32-C31M 1M				
		M4	E32-D211R 2M	210	90	60	16
		M6	E32-D11R 2M	1,260	520	360	100
			E32-CC200 2M	2,100	900	600	180
			E32-LD11 2M	1,290	540	370	110
			E32-LD11R 2M	1,260	520	360	100

✻1. The fiber length is 2 m on each side, so the sensing distance is given as 4,000 mm.

Cylindrical Models

Sensing method	Size	Sensing direction	Model	Sensing distance (mm)			
				Giga mode	Standard mode	High-speed mode	Super-high-speed mode
Through-beam	1 dia.	Top-view	E32-T223R 2M	670	370	220	60
	1.5 dia.		E32-T22B 2M	1,020	600	330	90
	3 dia.		E32-T12R 2M	3,000	1,500	1,050	280
		Side-view	E32-T14LR 2M	1,120	670	390	100
Reflective	1.5 dia.	Top-view	E32-D22B 2M	210	90	60	16
	1.5 dia. + 0.5 dia.		E32-D43M 1M	42	18	12	4
	3 dia.		E32-D22R 2M	210	90	60	16
			E32-D221B 2M	450	210	130	40
			E32-D32L 2M	1,050	450	300	90
	3 dia. + 0.8 dia.		E32-D33 2M	100	45	30	8

Flat Models

Sensing method	Sensing direction	Model	Sensing distance (mm)			
			Giga mode	Standard mode	High-speed mode	Super-high-speed mode
Through-beam	Top-view	E32-T15XR 2M	3,000	1,500	1,050	280
	Side-view	E32-T15YR 2M	1,120	670	390	100
	Flat-view	E32-T15ZR 2M				
Reflective	Top-view	E32-D15XR 2M	1,260	520	360	100
	Side-view	E32-D15YR 2M	300	150	78	24
	Flat-view	E32-D15ZR 2M				

Sleeve Models

Sensing method	Sensing direction	Model	Sensing distance (mm)			
			Giga mode	Standard mode	High-speed mode	Super-high-speed mode
Through-beam	Side-view	E32-T24R 2M	250	150	75	20
		E32-T24E 2M	670	370	220	60
	Top-view	E32-T33 1M	220	130	75	20
		E32-T21-S1 2M	760	450	250	68
		E32-TC200BR 2M	3,000	1,500	1,050	280
Reflective	Side-view	E32-D24R 2M	100	45	30	8
		E32-D24-S2 2M	180	79	67	14
	Top-view	E32-D43M 1M	42	18	12	4
		E32-D331 2M	21	9	6	2
		E32-D33 2M	100	45	30	8
		E32-D32-S1 0.5M	94	40	27	7
		E32-D31-S1 0.5M				
		E32-DC200F4R 2M	210	90	60	16
		E32-D22-S1 2M	370	160	100	30
		E32-D21-S3 2M				
		E32-DC200BR 2M	1,260	520	360	100
		E32-D25-S3 2M	370	160	100	30

Small-spot, Reflective Models

Type	Spot diameter	Center distance (mm)	Models	Sensing distance (mm)			
				Giga mode	Standard mode	High-speed mode	Super-high-speed mode
Variable spot	0.1 to 0.6 dia.	6 to 15	E32-C42 1M + E39-F3A	Spot diameter of 0.1 to 0.6 mm at 6 to 15 mm.			
	0.3 to 1.6 dia.	10 to 30	E32-C42 1M + E39-F17	Spot diameter of 0.3 to 1.6 mm at 10 to 30 mm.			
Parallel light	4 dia.	0 to 20	E32-C31 2M + E39-F3C	Spot diameter of 4 mm max. at 0 to 20 mm.			
			E32-C31N 2M + E39-F3C				
Integrated lens	0.1 dia.	5	E32-C42S 1M	Spot diameter of 0.1 mm at 5 mm.			
	6 dia.	50	E32-L15 2M	Spot diameter of 6 mm at 50 mm.			
Small-spot	0.1 dia.	7	E32-C41 1M + E39-F3A-5	Spot diameter of 0.1 mm at 7 mm.			
	0.5 dia.		E32-C31 2M + E39-F3A-5	Spot diameter of 0.5 mm at 7 mm.			
			E32-C31N 2M + E39-F3A-5				
	0.2 dia.	17	E32-C41 1M + E39-F3B	Spot diameter of 0.2 mm at 17 mm.			
	0.5 dia.		E32-C31 2M + E39-F3B	Spot diameter of 0.5 mm at 17 mm.			
			E32-C31N 2M + E39-F3B				
	3 dia.	50	E32-CC200 2M + E39-F18	Spot diameter of 3 mm at 50 mm.			
			E32-C11N 2M + E39-F18				

High-power Beam Models

Type	Sensing direction	Aperture angle	Models	Sensing distance (mm)			
				Giga mode	Standard mode	High-speed mode	Super-high-speed mode
Through-beam models with integrated lens	Right-angle	15°	E32-LT11N 2M	4,000 ✻2	4,000 ✻2	3,450	920
	Top-view	10°	E32-T17L 10M	20,000 ✻1	20,000 ✻1	20,000 ✻1	8,000
		15°	E32-LT11 2M	4,000 ✻2	4,000 ✻2	4,000 ✻2	1,080
			E32-LT11R 2M	4,000 ✻2	4,000 ✻2	3,450	920
	Side-view	30°	E32-T14 2M	4,000 ✻2	4,000 ✻2	4,000 ✻2	1,800
Through-beam models with lenses	Right-angle	12°	E32-T11N 2M + E39-F1	4,000 ✻2	4,000 ✻2	4,000 ✻2	2,000
		6°	E32-T11N 2M + E39-F16	4,000 ✻2	4,000 ✻2	4,000 ✻2	3,600
	Top-view	12°	E32-T11R 2M + E39-F1	4,000 ✻2	4,000 ✻2	4,000 ✻2	2,000
		6°	E32-T11R 2M + E39-F16	4,000 ✻2	4,000 ✻2	4,000 ✻2	3,600
	Side-view	60°	E32-T11R 2M + E39-F2	2,170	1,200	750	200
	Top-view	12°	E32-T11 2M + E39-F1	4,000 ✻2	4,000 ✻2	4,000 ✻2	1,860
		6°	E32-T11 2M + E39-F16	4,000 ✻2	4,000 ✻2	4,000 ✻2	4,000 ✻2
	Side-view	60°	E32-T11 2M + E39-F2	3,450	1,980	1,290	320
	Top-view	12°	E32-T51R 2M + E39-F1	4,000 ✻2	4,000 ✻2	4,000 ✻2	1,500
		6°	E32-T51R 2M + E39-F16	4,000 ✻2	4,000 ✻2	4,000 ✻2	4,000 ✻2
	Side-view	60°	E32-T51R 2M + E39-F2	2,100	1,080	750	200
	Top-view	12°	E32-T81R-S 2M + E39-F1	4,000 ✻2	4,000 ✻2	4,000 ✻2	1,000
		6°	E32-T81R-S 2M + E39-F16	4,000 ✻2	4,000 ✻2	4,000 ✻2	1,800
	Side-view	60°	E32-T81R-S 2M + E39-F2	1,500	820	540	140
	Top-view	12°	E32-T61-S 2M + E39-F1	4,000 ✻2	4,000 ✻2	4,000 ✻2	1,800
		6°	E32-T61-S 2M + E39-F16	4,000 ✻2	4,000 ✻2	4,000 ✻2	3,100
	Side-view	60°	E32-T61-S 2M + E39-F2	2,520	1,350	900	240
	Top-view	12°	E32-T51 2M + E39-F1-33	4,000 ✻2	4,000 ✻2	3,450	1,400
		6°	E32-T51 2M + E39-F16	4,000 ✻2	4,000 ✻2	4,000 ✻2	4,000 ✻2
Reflective models with integrated lens	Top-view	4°	E32-D16 2M	40 to 4,200	40 to 2,100	40 to 1,350	40 to 720

✻1. The fiber length is 10 m on each side, so the sensing distance is given as 20,000 mm.
✻2. The fiber length is 2 m on each side, so the sensing distance is given as 4,000 mm.

Narrow View Models

Sensing method	Sensing direction	Aperture angle	Models	Sensing distance (mm)			
				Giga mode	Standard mode	High-speed mode	Super-high-speed mode
Through-beam	Side-view	1.5°	E32-A03 2M	4,000 ✻1	2,670	1,800	500
			E32-A03-1 2M				
		3.4°	E32-A04 2M	1,920	1,020	670	200
		4°	E32-T24SR 2M	4,000 ✻1	3,300	2,190	580
			E32-T24S 2M	4,000 ✻1	3,900	2,610	700
			E32-T22S 2M	4,000 ✻1	4,000 ✻1	3,750	1,000

✻1. The fiber length is 2 m on each side, so the sensing distance is given as 4,000 mm.

Models for Detection without Background Interference

Sensing method	Sensing direction	Model	Sensing distance (mm)			
			Giga mode	Standard mode	High-speed mode	Super-high-speed mode
Limited-reflective	Flat-view	E32-L16-N 2M	0 to 15			0 to 12
		E32-L24S 2M	0 to 4			
	Side-view	E32-L25L 2M	5.4 to 9 (center 7.2)			

Transparent Object Detection (Retro-reflective Models)

Sensing method	Feature	Size	Models	Sensing distance (mm)			
				Giga mode	Standard mode	High-speed mode	Super-high-speed mode
Retro-reflective	Film detection	M3	E32-C31 2M + E39-F3R + E39-RP37	370		300	---
	Square	---	E32-R16 5M	150 to 1,500			
	Threaded	M6	E32-R21 2M	10 to 370			10 to 250
	Hex-shaped		E32-LR11NP 2M + E39-RP1	2,020	1,800	1,500	550

Transparent Object Detection (Limited-reflective Models)

Sensing method	Feature	Sensing direction	Model	Sensing distance (mm)			
				Giga mode	Standard mode	High-speed mode	Super-high-speed mode
Limited-reflective	Small size	Flat-view	E32-L24S 2M	0 to 4			
	Standard		E32-L16-N 2M	0 to 15			0 to 12
	Glass substrate alignment, 70°C		E32-A08 2M	10 to 20			---
	Standard/long-distance		E32-A12 2M	12 to 30			---
	Side-view form	Side-view	E32-L25L 2M	5.4 to 9 (center 7.2)			
	Glass substrate mapping, 70°C	Top-view	E32-A09 2M	15 to 38			---

Chemical-resistant, Oil-resistant Models

Sensing method	Type	Sensing direction	Model	Sensing distance (mm)			
				Giga mode	Standard mode	High-speed mode	Super-high-speed mode
Through-beam	Oil-resistant	Right-angle	E32-T11NF 2M	4,000 ✻1	4,000 ✻1	4,000 ✻1	2,200
	Chemical/oil-resistant	Top-view	E32-T12F 2M	4,000 ✻1	4,000 ✻1	4,000 ✻1	1,600
			E32-T11F 2M	4,000 ✻1	4,000 ✻1	3,900	1,000
		Side-view	E32-T14F 2M	2,100	1,200	750	200
	Chemical/oil-resistant at 150°C	Top-view	E32-T51F 2M	4,000 ✻1	4,000 ✻1	2,700	700
Reflective	Semiconductors: Cleaning, developing, and etching; 60°C	Top-view	E32-L11FP 5M	8 to 20 mm from tip of lens (Recommended sensing distance: 11 mm), 19 to 31 mm from center of mounting hole A (Recommended sensing distance: 22 mm)			
	Semiconductors: Resist stripping; 85°C		E32-L11FS 5M	8 to 20 mm from tip of lens (Recommended sensing distance: 11 mm), 32 to 44 mm from center of mounting hole A (Recommended sensing distance: 35 mm)			
	Chemical/oil-resistant		E32-D12F 2M	--- ✻2	280	190	60
	Chemical-resistant cable		E32-D11U 2M	1,260	520	360	100

✻1. The fiber length is 2 m on each side, so the sensing distance is given as 4,000 mm.
✻2. Even if there is no sensing object, the Sensor will detect light that is reflected by the fluororesin.

Bending-resistant Models

Sensing method	Size	Model	Sensing distance (mm)			
			Giga mode	Standard mode	High-speed mode	Super-high-speed mode
Through-beam	1.5 dia.	E32-T22B 2M	1,020	600	330	90
	M3	E32-T21 2M				
	M4	E32-T11 2M	3,750	2,020	1,350	360
	Square	32-T25XB 2M	750	450	250	70
Reflective	1.5 dia.	E32-D22B 2M	210	90	60	16
	M3	E32-D21 2M				
	3 dia.	E32-D221B 2M	450	210	130	40
	M4	E32-D21B 2M				
	M6	E32-D11 2M	1,260	520	360	100
	Square	E32-D25XB 2M	360	150	90	30

Heat-resistant Models

Sensing method	Heat-resistant temperature	Model	Sensing distance (mm)			
			Giga mode	Standard mode	High-speed mode	Super-high-speed mode
Through-beam	100°C	E32-T51R 2M	2,400	1,200	840	225
	150°C	E32-T51 2M	4,000 ✻1	2,250	1,500	400
	200°C	E32-T81R-S 2M	1,500	820	540	140
	350°C	E32-T61-S 2M	2,520	1,350	900	240
Reflective	100°C	E32-D51R 2M	1,000	420	280	80
	150°C	E32-D51 2M	1,680	670	480	144
	200°C	E32-D81R-S 2M	630	270	180	54
	300°C	E32-A08H2 2M	10 to 20			---
		E32-A09H2 2M	20 to 30 (center 25)			---
	350°C	E32-D611-S 2M	630	270	180	54
		E32-D61-S 2M				
	400°C	E32-D73-S 2M	420	180	120	36

✻1. The fiber length is 2 m on each side, so the sensing distance is given as 4,000 mm.

Area Detection Models

Sensing method	Type	Sensing width	Model	Sensing distance (mm)			
				Giga mode	Standard mode	High-speed mode	Super-high-speed mode
Through-beam	Area	11 mm	E32-T16PR 2M	4,000 ※1	2,550	1,680	440
			E32-T16JR 2M	4,000 ※1	2,250	1,440	380
		30 mm	E32-T16WR 2M	4,000 ※1	3,900	2,550	680
Reflective	Array	11 mm	E32-D36P1 2M	1,050	450	300	90

※1. The fiber length is 2 m on each side, so the sensing distance is given as 4,000 mm.

Liquid-level Detection Models

Sensing method	Tube diameter	Feature	Model	Sensing distance (mm)			
				Giga mode	Standard mode	High-speed mode	Super-high-speed mode
Tube-mounting	3.2, 6.4, or 9.5 dia	Stable residual quantity detection	E32-A01 5M	Applicable tube: Transparent tube with a diameter of 3.2, 6.4, or 9.5 mm, Recommended wall thickness: 1 mm			
	8 to 10 dia	Mounting at multiple levels	E32-L25T 2M	Applicable tube: Transparent tube with a diameter of 8 to 10 mm, Recommended wall thickness: 1 mm			
	No restrictions	Large tubes	E32-D36T 5M	Applicable tube: Transparent tube (no restrictions on diameter)			
Liquid contact (heat-resistant up to 200°C)	---	---	E32-D82F1 4M	Liquid-contact type			

Vacuum-resistant Models

Sensing method	Heat-resistant temperature	Model	Sensing distance (mm)			
			Giga mode	Standard mode	High-speed mode	Super-high-speed mode
Through-beam	120°C	E32-T51V 1M	1,080	600	390	100
		E32-T51V 1M + E39-F1V	2,000 ※1	2,000 ※1	2,000 ※1	520
	200°C	E32-T84SV 1M	2,000 ※1	1,420	960	260

※1. The fiber length is 1 m on each side, so the sensing distance is given as 2,000 mm.

Models for FPD, Semiconductors, and Solar Cells

Sensing method	Application	Operating temperature	Model	Sensing distance (mm)			
				Giga mode	Standard mode	High-speed mode	Super-high-speed mode
Limited-reflective	Glass presence detection	70°C	E32-L16-N 2M	0 to 15			0 to 12
	Glass substrate alignment		E32-A08 2M	10 to 20			---
		300°C	E32-A08H2 3M				
		70°C	E32-A12 2M	12 to 30			---
	Glass substrate mapping		E32-A09 2M	15 to 38			---
		300°C	E32-A09H2 2M	20 to 30 (center 25)			---
	Wet processes: Cleaning, Resist developing and etching	60°C	E32-L11FP 5M	8 to 20 mm from tip of lens (Recommended sensing distance: 11 mm), 19 to 31 mm from center of mounting hole A (Recommended sensing distance: 22 mm)			
	Wet process: Resist stripping	85°C	E32-L11FS 5M	8 to 20 mm from tip of lens (Recommended sensing distance: 11 mm), 32 to 44 mm from center of mounting hole A (Recommended sensing distance: 35 mm)			
Through-beam	Wafer mapping	70°C	E32-A03 2M	4,000 ※1	2,670	1,800	500
			E32-A03-1 2M				
			E32-A04 2M	1,920	1,020	670	200
			E32-T24SR 2M	4,000 ※1	3,300	2,190	580
			E32-T24S 2M	4,000 ※1	3,900	2,610	700

※1. The fiber length is 2 m on each side, so the sensing distance is given as 4,000 mm.

Infrared models

Threaded Models

Sensing method	Sensing direction	Size	Model	Sensing distance (mm)			
				Giga mode	Standard mode	High-speed mode	Super-high-speed mode
Through-beam	Right-angle	M4	E32-T11N 2M	280	190	130	55
	Straight		E32-T11R 2M				
Reflective	Straight	M3	E32-C31 2M	50	37	25	8.5
		M6	E32-D11R 2M	120	90	60	21
			E32-CC200 2M	200	150	100	35

Cylindrical Models

Sensing method	Size	Sensing direction	Model	Sensing distance (mm)			
				Giga mode	Standard mode	High-speed mode	Super-high-speed mode
Through-beam	3 dia.	Top-view	E32-T12R 2M	280	190	130	55
		Side-view	E32-T14LR 2M	100	75	80	21
Reflective	3 dia.	Top-view	E32-D32L 2M	100	75	50	17

Flat Models

Sensing method	Sensing direction	Model	Sensing distance (mm)			
			Giga mode	Standard mode	High-speed mode	Super-high-speed mode
Through-beam	Top-view	E32-T15XR 2M	280	190	130	55
	Side-view	E32-T15YR 2M	100	75	80	21
	Flat-view	E32-T15ZR 2M				
Reflective	Top-view	E32-D15XR 2M	120	90	60	21
	Side-view	E32-D15YR 2M	28	20	13	5
	Flat-view	E32-D15ZR 2M				

Sleeve Models

Sensing method	Sensing direction	Model	Sensing distance (mm)			
			Giga mode	Standard mode	High-speed mode	Super-high-speed mode
Through-beam	Top-view	E32-TC200BR 2M	280	190	130	55
Reflective	Top-view	E32-DC200BR 2M	120	90	60	21

High-power Beam Models

Type	Sensing direction	Aperture angle	Models	Sensing distance (mm)			
				Giga mode	Standard mode	High-speed mode	Super-high-speed mode
Through-beam models with integrated lens	Side-view	30°	E32-T14 2M	1800	1200	820	360

I/O Circuit Diagrams

NPN Output

Model	Operation mode	Timing chart	L/D indicator	Output circuit
E3NX-FA11 E3NX-FA6 E3NX-FA11-5 E3NX-FAH11 E3NX-FAH6	Light-ON	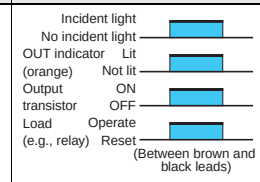	L lit.	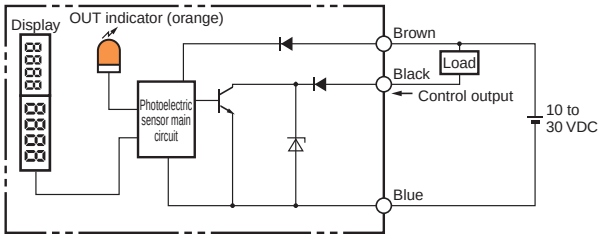
	Dark-ON	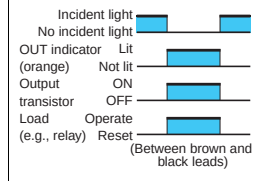	D lit.	
E3NX-FA21	Light-ON	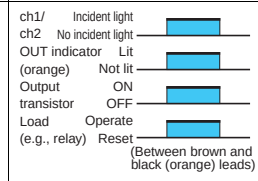	L lit.	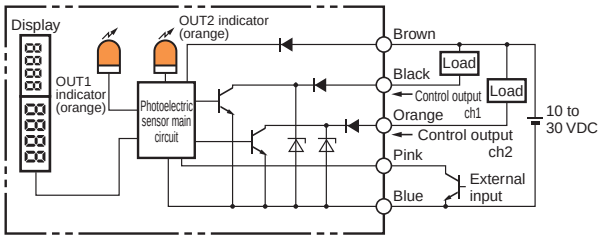
	Dark-ON	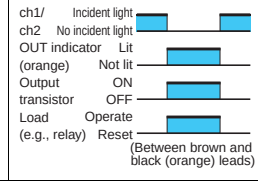	D lit.	
E3NX-FA7 E3NX-FA24	Light-ON	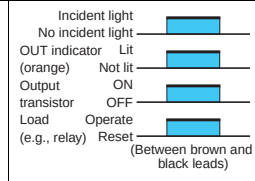	L lit.	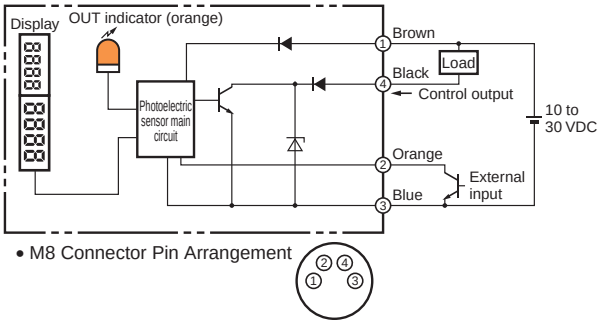
	Dark-ON	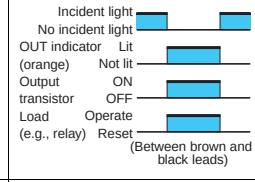	D lit.	
E3NX-FA7TW	Light-ON	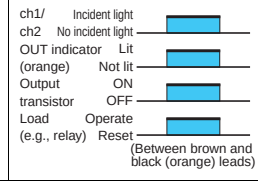	L lit.	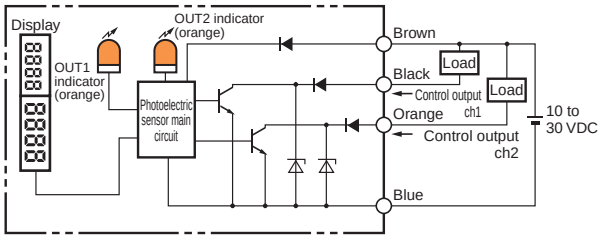
	Dark-ON	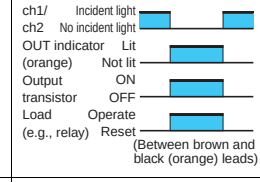	D lit.	
E3NX-FA11AN	Light-ON	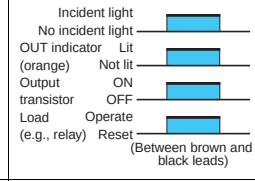	L lit.	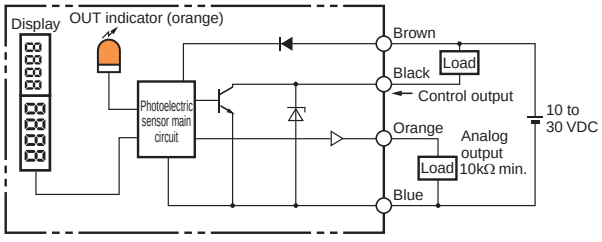
	Dark-ON	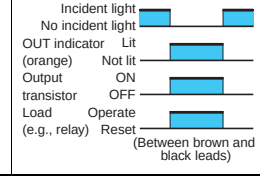	D lit.	

PNP Output

Model	Operation mode	Timing chart	L/D indicator	Output circuit
E3NX-FA41 E3NX-FA8 E3NX-FAH41 E3NX-FAH8	Light-ON	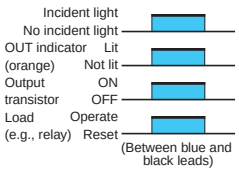	L lit.	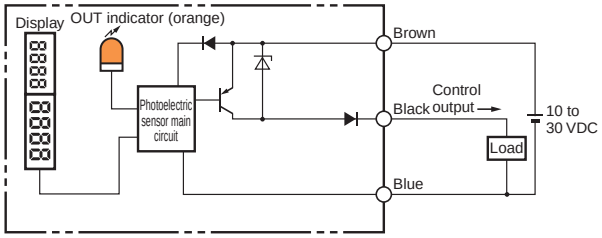
	Dark-ON	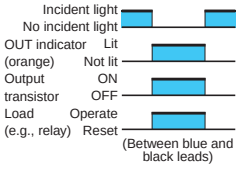	D lit.	
E3NX-FA51	Light-ON	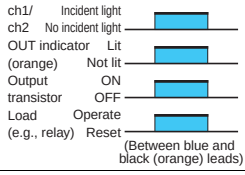	L lit.	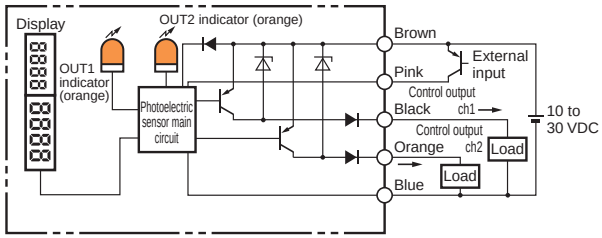
	Dark-ON	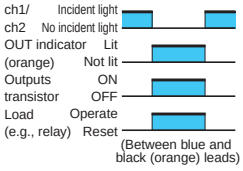	D lit.	
E3NX-FA9 E3NX-FA54	Light-ON	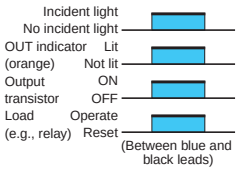	L lit.	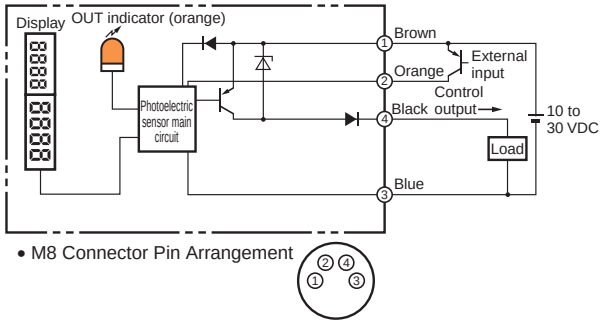
	Dark-ON	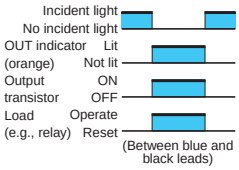	D lit.	
E3NX-FA9TW E3NX-FA54TW	Light-ON	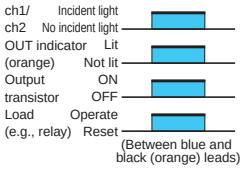	L lit.	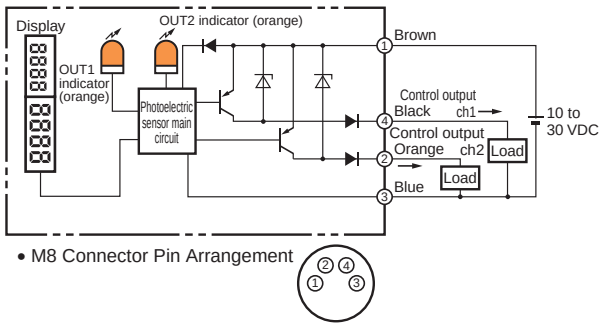
	Dark-ON	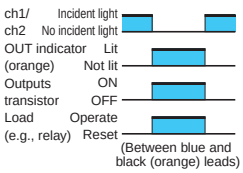	D lit.	
E3NX-FA41AN	Light-ON	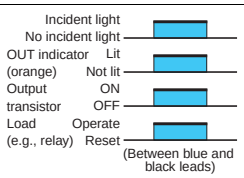	L lit.	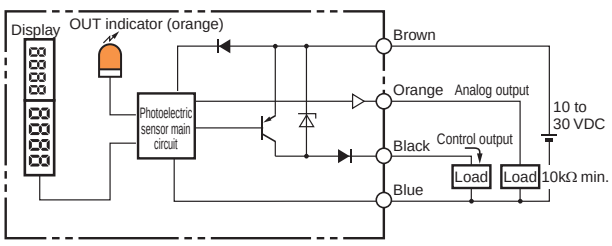
	Dark-ON	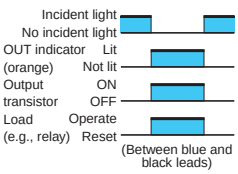	D lit.	

Plug (Sensor I/O Connector)

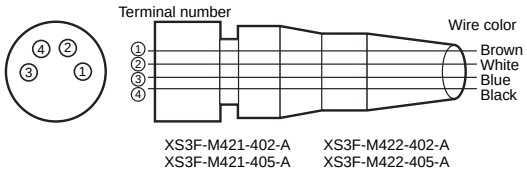

Wire color	Connection pin	Application
Brown	1	Power supply (+V)
White	2	External input / Output
Blue	3	Power supply (0 V)
Black	4	Output

Nomenclature

E3NX-FA11/FA41/FA6/FA8/FA7/FA9/FA24/FA54/ FA11-5/FAH11/FAH41/FAH6/FAH8/FA11AN/FA41AN

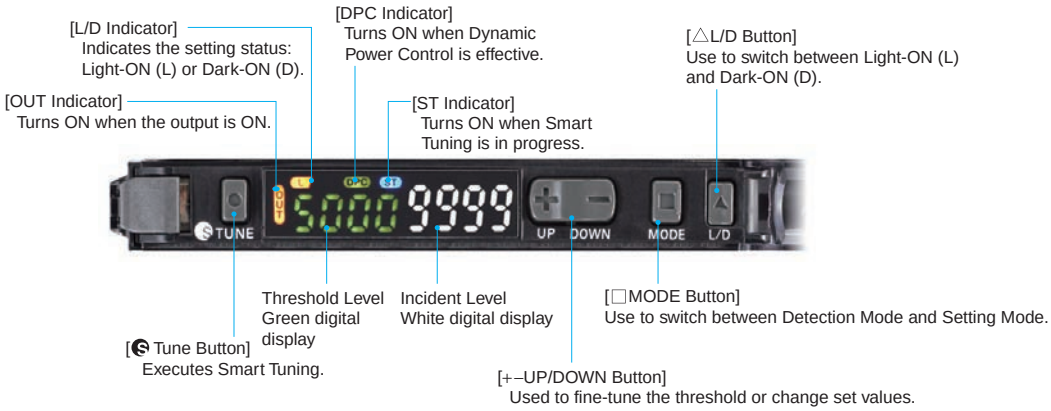

E3NX-FA21/FA51/FA7TW/FA9TW/FA54TW/FA10/FA40/FA0/FAH0

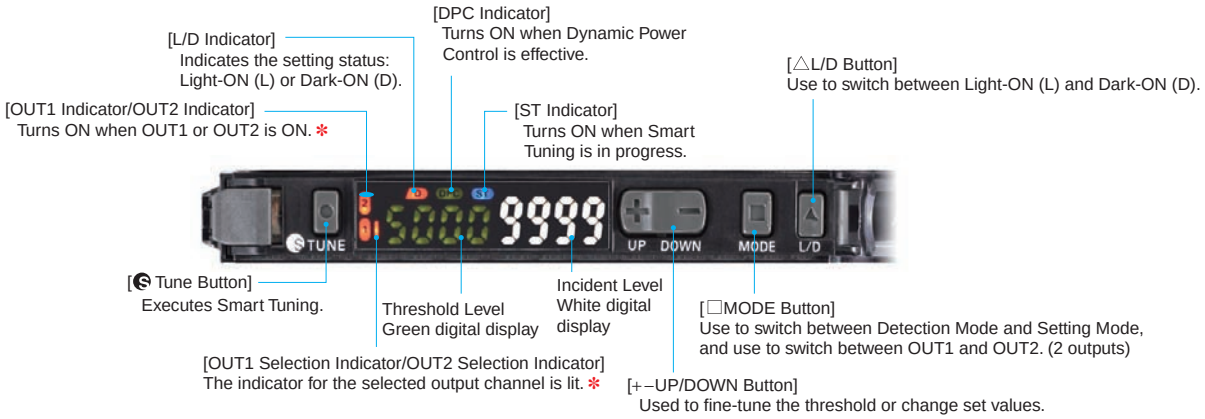

✻ Only OUT1 turns ON for output.

Safety Precautions

Be sure to read the precautions for all models in the website at: http://www.ia.omron.com/.

Warning Indications

⚠WARNING	**Warning level** Indicates a potentially hazardous situation which, if not avoided, will result in minor or moderate injury, or may result in serious injury or death. Additionally, there may be significant property damage.
Precautions for Safe Use	Supplementary comments on what to do or avoid doing, to use the product safely.
Precautions for Correct Use	Supplementary comments on what to do or avoid doing, to prevent failure to operate, malfunction or undesirable effect on product performance.

Meaning of Product Safety Symbols

	**General prohibition** Indicates the instructions of unspecified prohibited action.
	**Caution, explosion** Indicates the possibility of explosion under specific conditions.
	**Caution, fire** Indicates the possibility of fire under specific conditions.

⚠ WARNING

This product is not designed or rated for ensuring safety of persons either directly or indirectly.
Do not use it for such purposes.



Do not use the product with voltage in excess of the rated voltage.
Excess voltage may result in malfunction or fire.



Never use the product with an AC power supply.
Otherwise, explosion may result.



Precautions for Safe Use

The following precautions must be observed to ensure safe operation of the Amplifier Unit. Doing so may cause damage or fire.

1. Do not install the product in the following locations.
   - Locations subject to direct sunlight
   - Locations subject to condensation due to high humidity
   - Locations subject to corrosive gas
   - Locations subject to vibration or mechanical shocks exceeding the rated values
   - Locations subject to exposure to water, oil, chemicals
   - Locations subject to stream
   - Locations subjected to strong magnetic field or electric field
2. Do not use the product in environments subject to flammable or explosive gases.
3. Do not use the product in any atmosphere or environment that exceeds the ratings.
4. To secure the safety of operation and maintenance, do not install the product close to high-voltage devices and power devices.
5. High-voltage lines and power lines must be wired separately from the product. Wiring them together or placing them in the same duct may cause induction, resulting in malfunction or damage.
6. Do not apply any load exceeding the ratings. Otherwise, damage or fire may result.
7. Do not short the load. Otherwise, damage or fire may result.
8. Connect the load correctly.
9. Do not miswire such as the polarity of the power supply.
10. To use this device as connecting with each other, be sure to connect with the same power supply and turn ON the power simultaneously. Using a separate power supply will influence the functions when connecting the devices to use them.
11. Do not use the product if the case is damaged.
12. Burn injury may occur. The product surface temperature rises depending on application conditions, such as the ambient temperature and the power supply voltage. Attention must be paid during operation or cleaning.
13. When setting the sensor, be sure to check safety such as by stopping the equipment.
14. Be sure to turn off the power supply before connecting or disconnecting wires.
15. Do not attempt to disassemble, repair, or modify the product in any way.
16. When disposing of the product, treat it as industrial waste.
17. Do not use the Sensor in water, rainfall, or outdoors.
18. Use the product in the IP54 enclosure.
19. UL Standard Certification (Applicable Models: E3NX-FA11/21/41/51 Only)
    Only the sensors with Enhanced UL Certification Mark are certified by UL. They are intended to be supplied by a "Class 2 circuit". When used in United States and Canada, Please use the same Class 2 source for input and output.The overcurrent protection current rating is 2A max. They were evaluated as Open type and shall be installed within a enclosure.

Precautions for Correct Use

1. Be sure to mount the unit to the DIN track until it clicks.
2. When using the Amplifier Units with Wire-saving Connectors, attach the protective stickers (provided with E3X-CN-series Connectors) on the unused power pins to prevent electrical shock and short circuiting.
   When using the Amplifier Units with Connectors for Communications Units, attach the protective caps (provided with E3NW-series Sensor Communications Unit).

Amplifier Unit with Wire-saving Connector

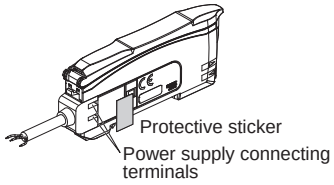

Amplifier Unit with Connector for Communications Unit

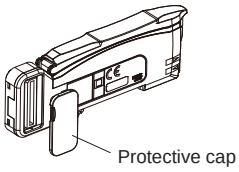

3. The length for the cable extension must be 30 m or less (or less than 10 m for S-mark certified models). Be sure to use a cable of at least 0.3 mm^2 for extension. The power voltage must be 24 to 30 V when connecting amplifier units with extension cable and wire-saving connector.
4. Do not apply the forces on the cord exceeding the following limits: Pull: 40N; torque: 0.1N·m; pressure: 20N; bending: 29.4N
5. Do not apply excessive force such as tension, compression or torsion to the Amplifier Unit with the Fiber Unit fixed to the Amplifier Unit.
6. Always keep the protective cover in place when using the Amplifier Unit. Not doing so may cause malfunction.
7. It may take time until the received light intensity and measured value become stable immediately after the power is turned on depending on use environment.
8. The product is ready to operate 200 ms after the power supply is turned ON.
9. The Mobile Console E3X-MC11, E3X-MC11-SV2 and E3X-MC11-S cannot be connected.
10. The mutual interference prevention function does not work when in combination with E3C/E2C/E3X.
11. If the unit receives excessive sensor light, the mutual interference prevention function may not work properly, resulting in malfunction of the unit. In such case, increase the threshold.
12. Standard models and Advanced models
    The Sensor Communication Unit E3X-DRT21-S, E3X-CRT, E3X-ECT and E3NW cannot be connected.
    Model for Sensor Communication Unit (E3NX-FA0)
    The Sensor Communication Unit E3NW can be connected.
    E3X-DRT21-S, E3X-CRT, E3X-ECT cannot be connected.
13. If you notice an abnormal condition such as a strange odor, extreme heating of the unit, or smoke immediately stop using the product, turn off the power, and consult your dealer.
14. Do not use thinner, benzene, acetone, and lamp oil for cleaning.

Dimensions

(Unit: mm)
Tolerance class IT16 applies to dimensions in this data sheet unless otherwise specified.

Fiber Amplifier Units

Pre-wired Amplifier Units

E3NX-FA□1(-5)
E3NX-FAH□1
E3NX-FA□AN



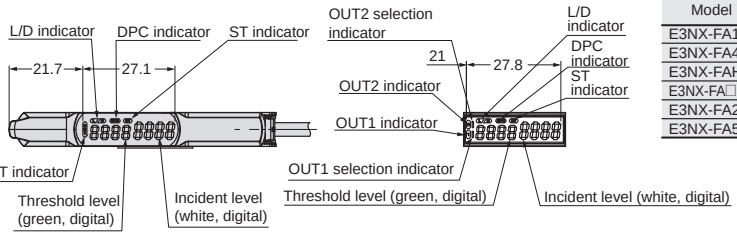

*Cable Specifications

Model	Outer diameter	No. of conductors	Others
E3NX-FA11(-5)	4.0 dia.	3	Conductor cross-section: 0.2 mm²
E3NX-FA41			Insulator dia.: 0.9 mm
E3NX-FAH□1		4	Standard cable length: 2 m
E3NX-FA□1AN			Minimum bending radius: 12 mm
E3NX-FA21	4.0 dia.	5	
E3NX-FA51			

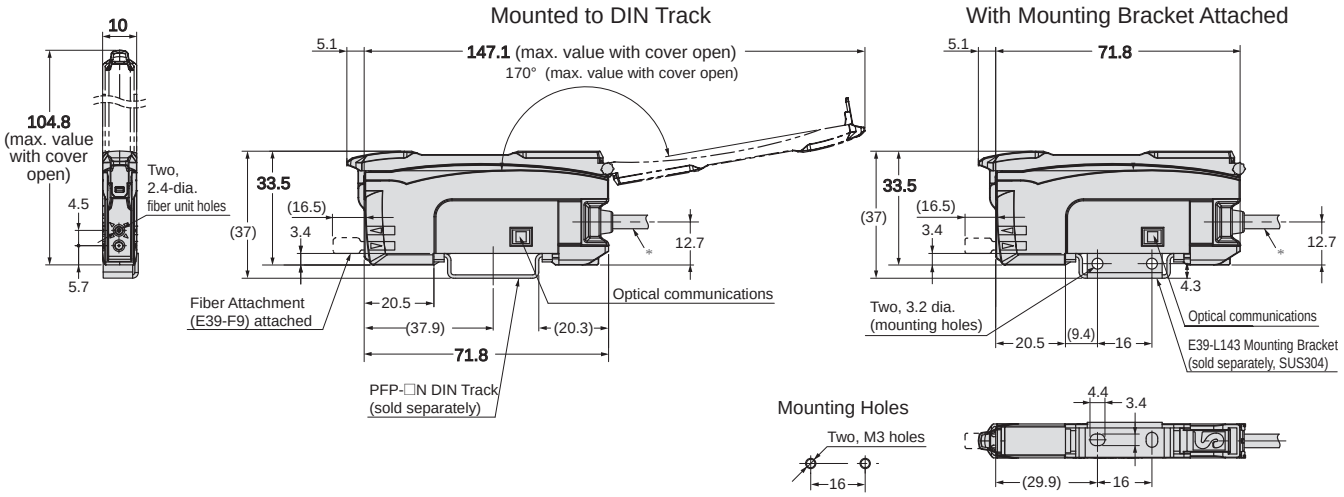

Amplifier Units with Wire-saving Connectors

E3NX-FA6
E3NX-FA7(TW)
E3NX-FA8
E3NX-FA9(TW)
E3NX-FAH6
E3NX-FAH8



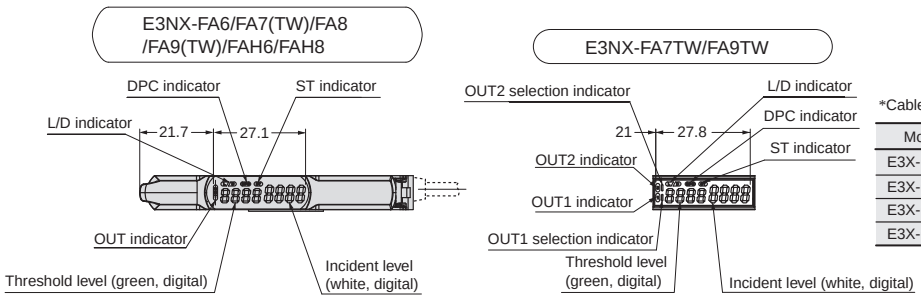

*Cable Specifications

Model	Outer diameter	No. of conductors
E3X-CN12	2.6 dia.	1
E3X-CN22	4.0 dia.	2
E3X-CN11		3
E3X-CN21		4

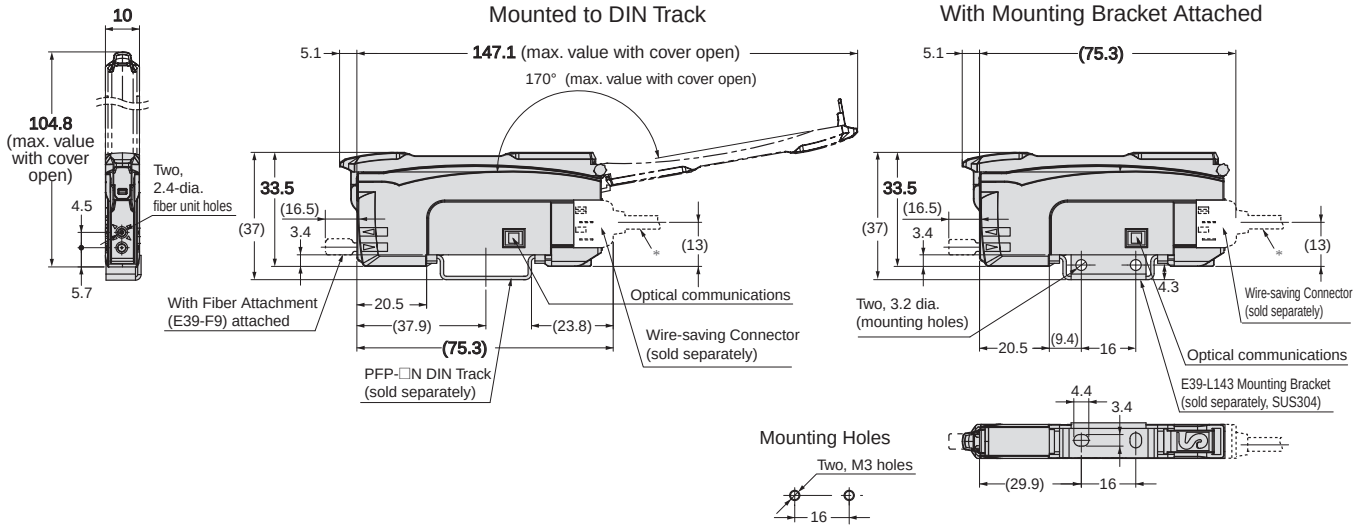

Amplifier Units with M8 Connectors

E3NX-FA24
E3NX-FA54
E3NX-FA54TW



E3NX-FA24/FA54

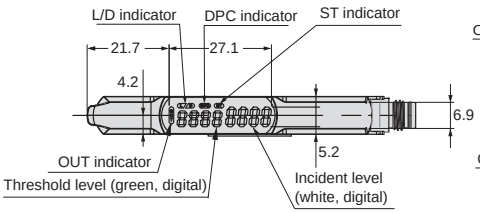

E3NX-FA54TW

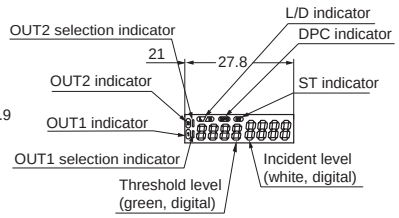

Connector pin arrangement

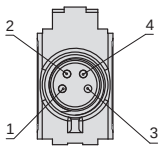

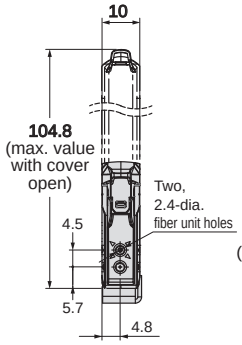

Mounted to DIN Track

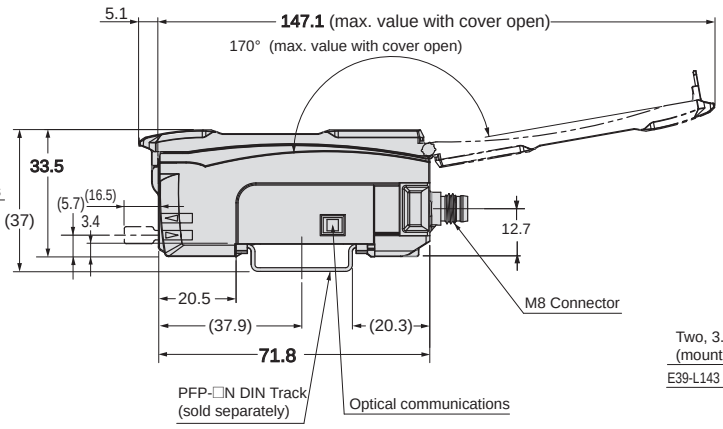

With Mounting Bracket Attached

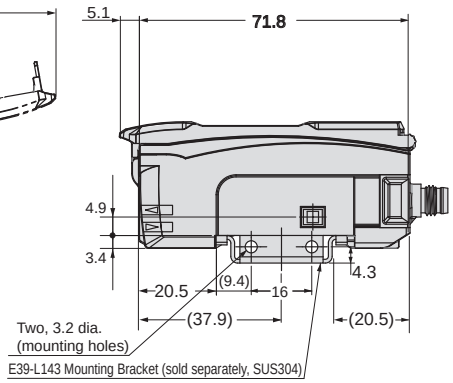

Mounting Holes

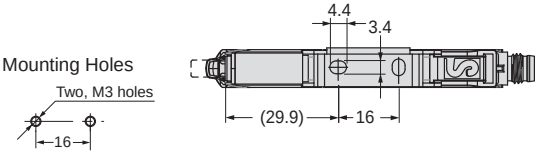

Amplifier Unit with Connector for Sensor Communications Unit

E3NX-FA0/FAH0



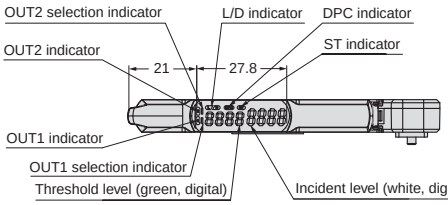

Mounted to DIN Track

E3NX-FA0/FAH0

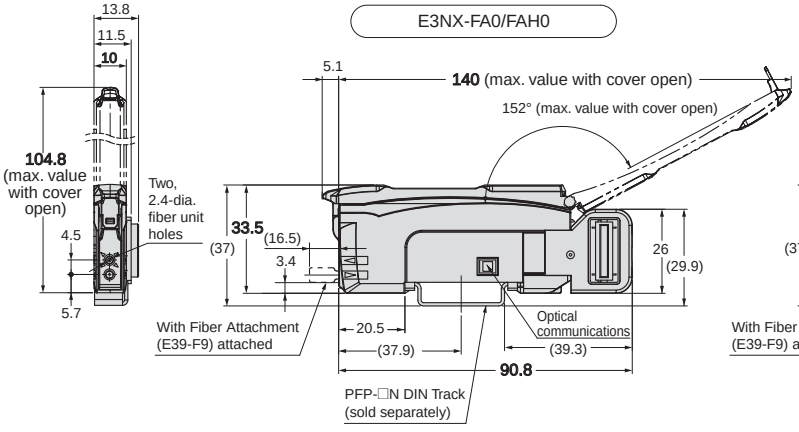

E3NX-FA10/FA40

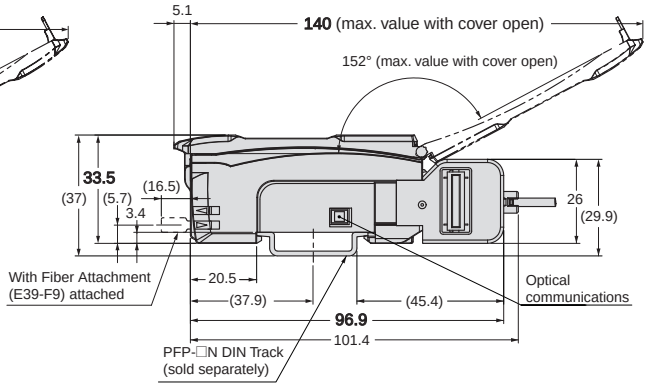

Accessories (Sold Separately)

Wire-saving Connectors

Master Connector
E3X-CN11
E3X-CN21



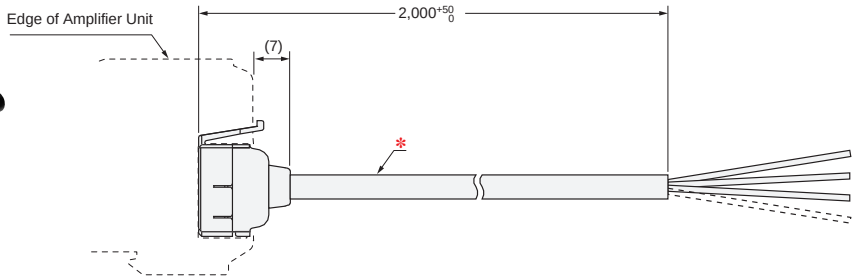

* E3X-CN11: 4-dia. cable with 3 conductors, Standard cable length: 2 m (Conductor cross-section: 0.2 mm^2 (AWG24), Insulator diameter: 1.1 mm)
E3X-CN21: 4-dia. cable with 4 conductors, Standard cable length: 2 m (Conductor cross-section: 0.2 mm^2 (AWG24), Insulator diameter: 1.1 mm)

Slave Connector
E3X-CN12
E3X-CN22



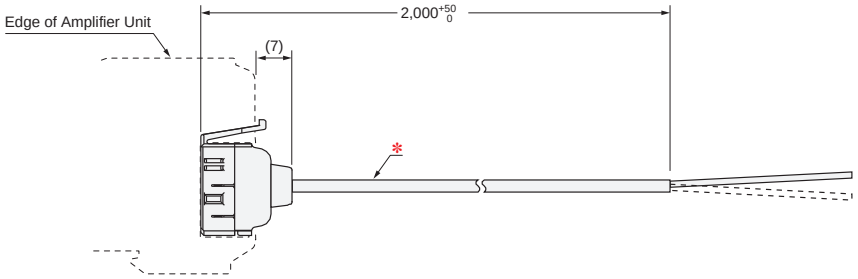

* E3X-CN12: 2.6-dia. cable with 1 conductor, Standard cable length: 2 m (Conductor cross-section: 0.2 mm^2 (AWG24), Insulator diameter: 1.1 mm)
E3X-CN22: 4-dia. cable with 2 conductors, Standard cable length: 2 m (Conductor cross-section: 0.2 mm^2 (AWG24), Insulator diameter: 1.1 mm)

Sensor I/O Connectors

Straight
XS3F-M421-40□-A



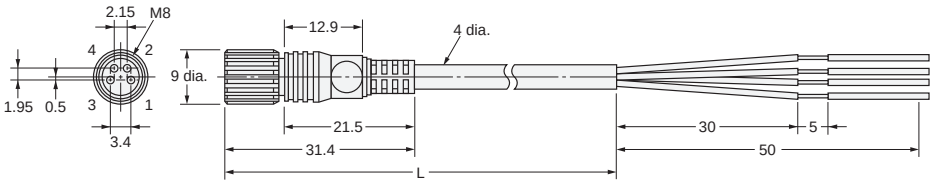

L-shaped
XS3F-M422-40□-A



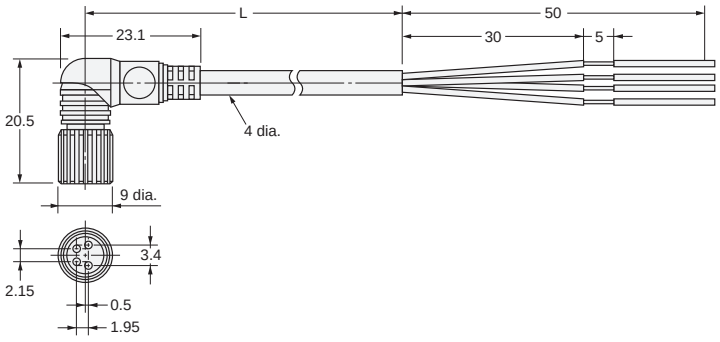

Mounting Bracket
E39-L143

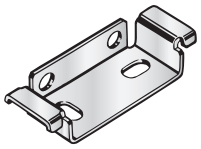

Material: Stainless steel (SUS304)

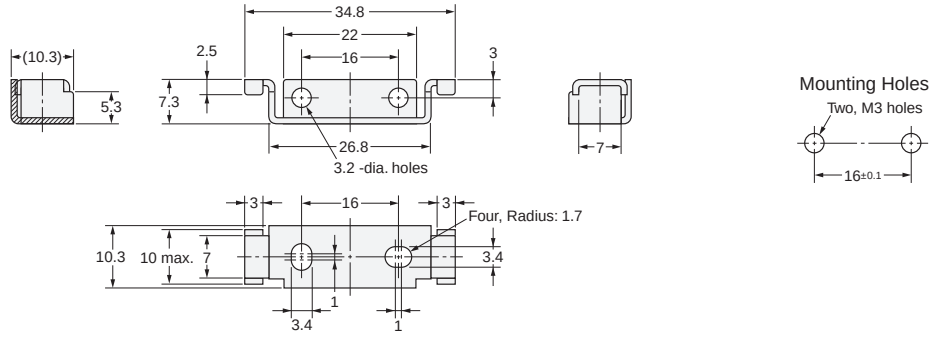

DIN Track
PFP-100N
PFP-50N



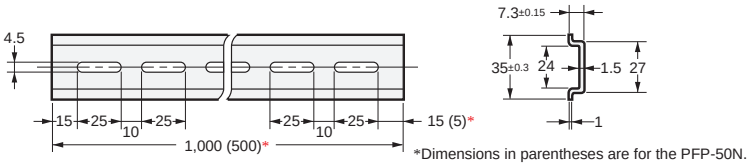

*Dimensions in parentheses are for the PFP-50N.

Material: Aluminum

PFP-100N2

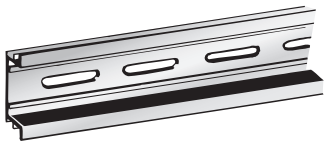

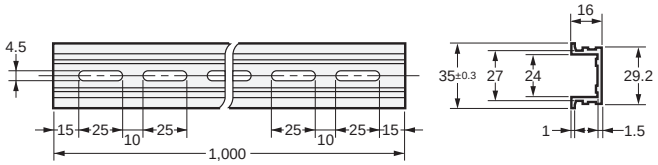

Material: Aluminum

End Plate
PFP-M

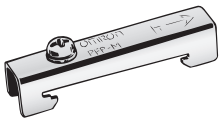

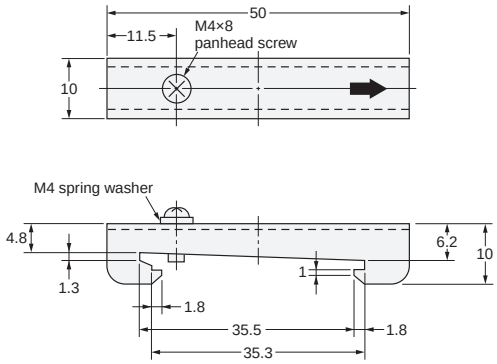

Materials: Iron, zinc plating

Terms and Conditions Agreement

Read and understand this catalog.
Please read and understand this catalog before purchasing the products. Please consult your OMRON representative if you have any questions or comments.

Warranties.
(a) Exclusive Warranty. Omron's exclusive warranty is that the Products will be free from defects in materials and workmanship for a period of twelve months from the date of sale by Omron (or such other period expressed in writing by Omron). Omron disclaims all other warranties, express or implied.
(b) Limitations. OMRON MAKES NO WARRANTY OR REPRESENTATION, EXPRESS OR IMPLIED, ABOUT NON-INFRINGEMENT, MERCHANTABILITY OR FITNESS FOR A PARTICULAR PURPOSE OF THE PRODUCTS. BUYER ACKNOWLEDGES THAT IT ALONE HAS DETERMINED THAT THE
PRODUCTS WILL SUITABLY MEET THE REQUIREMENTS OF THEIR INTENDED USE.
Omron further disclaims all warranties and responsibility of any type for claims or expenses based on infringement by the Products or otherwise of any intellectual property right. (c) Buyer Remedy. Omron's sole obligation hereunder shall be, at Omron's election, to (i) replace (in the form originally shipped with Buyer responsible for labor charges for removal or replacement thereof) the non-complying Product, (ii) repair the non-complying Product, or (iii) repay or credit Buyer an amount equal to the purchase price of the non-complying Product; provided that in no event shall Omron be responsible for warranty, repair, indemnity or any other claims or expenses regarding the Products unless Omron's analysis confirms that the Products were properly handled, stored, installed and maintained and not subject to contamination, abuse, misuse or inappropriate modification. Return of any Products by Buyer must be approved in writing by Omron before shipment. Omron Companies shall not be liable for the suitability or unsuitability or the results from the use of Products in combination with any electrical or electronic components, circuits, system assemblies or any other materials or substances or environments. Any advice, recommendations or information given orally or in writing, are not to be construed as an amendment or addition to the above warranty.
See http://www.omron.com/global/ or contact your Omron representative for published information.

Limitation on Liability; Etc.
OMRON COMPANIES SHALL NOT BE LIABLE FOR SPECIAL, INDIRECT, INCIDENTAL, OR CONSEQUENTIAL DAMAGES, LOSS OF PROFITS OR PRODUCTION OR COMMERCIAL LOSS IN ANY WAY CONNECTED WITH THE PRODUCTS, WHETHER SUCH CLAIM IS BASED IN CONTRACT, WARRANTY, NEGLIGENCE OR STRICT LIABILITY.
Further, in no event shall liability of Omron Companies exceed the individual price of the Product on which liability is asserted.

Suitability of Use.
Omron Companies shall not be responsible for conformity with any standards, codes or regulations which apply to the combination of the Product in the Buyer's application or use of the Product. At Buyer's request, Omron will provide applicable third party certification documents identifying ratings and limitations of use which apply to the Product. This information by itself is not sufficient for a complete determination of the suitability of the Product in combination with the end product, machine, system, or other application or use. Buyer shall be solely responsible for determining appropriateness of the particular Product with respect to Buyer's application, product or system. Buyer shall take application responsibility in all cases.
NEVER USE THE PRODUCT FOR AN APPLICATION INVOLVING SERIOUS RISK TO LIFE OR PROPERTY OR IN LARGE QUANTITIES WITHOUT ENSURING THAT THE SYSTEM AS A WHOLE HAS BEEN DESIGNED TO ADDRESS THE RISKS, AND THAT THE OMRON PRODUCT(S) IS PROPERLY RATED AND INSTALLED FOR THE INTENDED USE WITHIN THE OVERALL EQUIPMENT OR SYSTEM.

Programmable Products.
Omron Companies shall not be responsible for the user's programming of a programmable Product, or any consequence thereof.

Performance Data.
Data presented in Omron Company websites, catalogs and other materials is provided as a guide for the user in determining suitability and does not constitute a warranty. It may represent the result of Omron's test conditions, and the user must correlate it to actual application requirements. Actual performance is subject to the Omron's Warranty and Limitations of Liability.

Change in Specifications.
Product specifications and accessories may be changed at any time based on improvements and other reasons. It is our practice to change part numbers when published ratings or features are changed, or when significant construction changes are made. However, some specifications of the Product may be changed without any notice. When in doubt, special part numbers may be assigned to fix or establish key specifications for your application. Please consult with your Omron's representative at any time to confirm actual specifications of purchased Product.

Errors and Omissions.
Information presented by Omron Companies has been checked and is believed to be accurate; however, no responsibility is assumed for clerical, typographical or proofreading errors or omissions.

2025.4

In the interest of product improvement, specifications are subject to change without notice.

OMRON Corporation
Industrial Automation Company

http://www.ia.omron.com/

(c)Copyright OMRON Corporation 2025 All Right Reserved.