NEW

OMRON

N-Smart
Presence Detection Measurement

Smart Fiber Amplifier Units
E3NX-FA

Industry-leading Levels* of Performance

Highly Stable Detection

Easy Setup for Any Workpiece by Any Operator

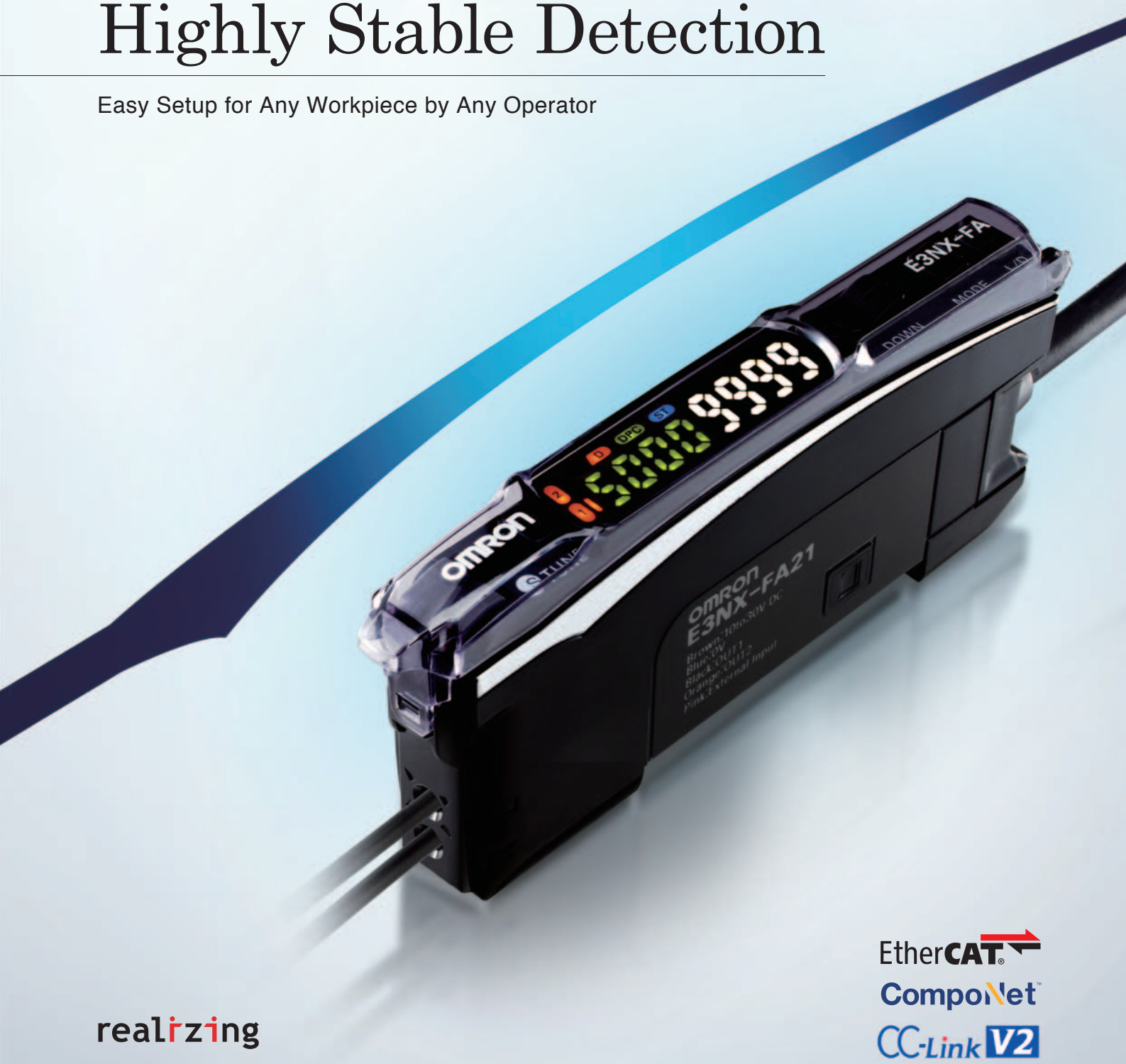

realizing

EtherCAT
CompoNet
CC-Link V2

* For performance (sensing distance and minimum sensing object) based on November 2013 OMRON investigation.

Ultra-stable

The No. 1 Performance Worldwide*1 for Even More Applications

Best Performance in the World*1

1.5 Times the Sensing Distance*2	1/10th the Minimum Sensing Object*2
6 m	**0.3 μm dia.**
For E32-LT11 Fiber Unit with a fiber length of 3.5 m	Typical example of actual measurements with E32-D11R Fiber Unit

Three Technologies That Support High Performance

Optical Coupling Efficiency of 40%

The lens and reflector eliminate lost light to emit powerful, uniform emission.

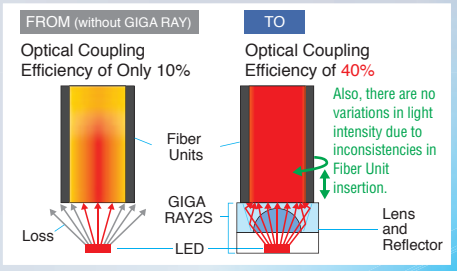

High Power to Achieve Stable Detection

HIGH-EFFECIENCY COUPLING ELEMENT*3
GIGA RAY2S

PAT



Low Noise to Accurately Capture Signals

LIGHT RECEPTION ALGORITHM
Smart Noise Reduction



High-speed, High-precision Signal Processing

HIGH-SPEED, HIGH-PRECISION IC
N-Core

Twice the Processing Speed*4

Signal-to-Noise Ratio Improved 2.5 Times

The influences of noise are reduced to achieve stable incident light levels by increasing the number of samples taken. This increases the margin for threshold values to achieve stable detection.

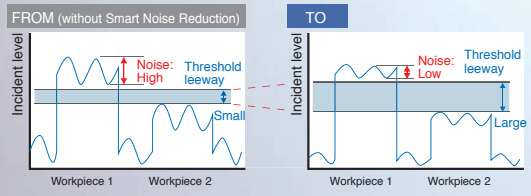

Point

Response Time of 30 μs in High-speed Mode*5

You can adjust the light intensity to detect fast-moving workpieces more accurately.*2

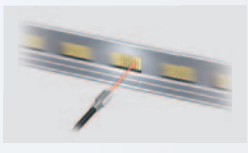

*1. For performance (sensing distance and minimum sensing object) based on November 2013 OMRON investigation. *2. Compared with E3X-HD.
*3. Infrared models (E3NX-FAH) are not equipped with GIGA RAY2S. *4. Compared with E3X-HD for normal operation processing. *5. Model with 1 output: 30 μs, model with 2 outputs: 32 μs.

Ultra-easy

Easily Handle a Wide Range of Applications with the Press of a Single Button

Consistent Settings for All Users **Smart Tuning Settings** PAT

Conventional Models*1

1st Step

Adjust light intensity.

2nd Step

Set threshold.

*1. Fiber Amplifier Unit without Smart Tuning.



Automatic Adjustment to Optimum Incident Level — **Wide Light Intensity Adjustment Range from Transparent Objects to Black Workpieces**

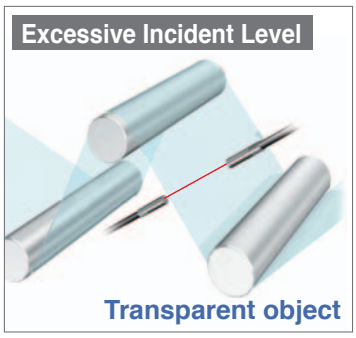



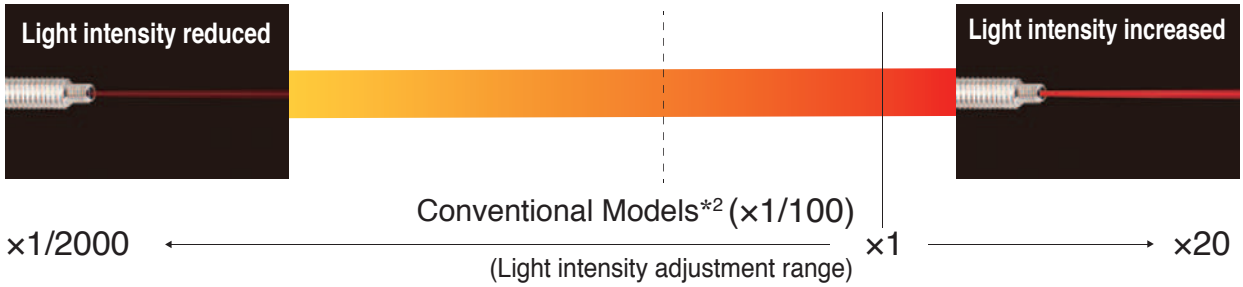

Conventional Models*2 (×1/100)

×1/2000 ← (Light intensity adjustment range) → ×20 (×1)

Wider light intensity adjustment range of 40,000 times (Conventional models*2: 2,000 times)
You can automatically adjust the light intensity to an optimum value for stable detection even with saturated or insufficient incident light.

*2. E3X-HD

Ultra-reliable

Two Decision Support Functions to Help You

Visual Displays of the Passing Time and Difference in Incident Levels. Solution Viewer PAT



Passing time Difference in incident level

Selecting Fiber Units

Just about anyone can make a quantitative decision without special skills.

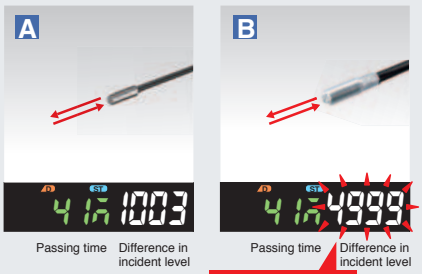

Setting Optimum Thresholds and Modes

You can see the passing time and difference in incident levels to facilitate manual setup.



Visual Information for Fast Workpieces Change Finder PAT

You can confirm changes in displayed values for fast workpieces to accurately set the threshold.

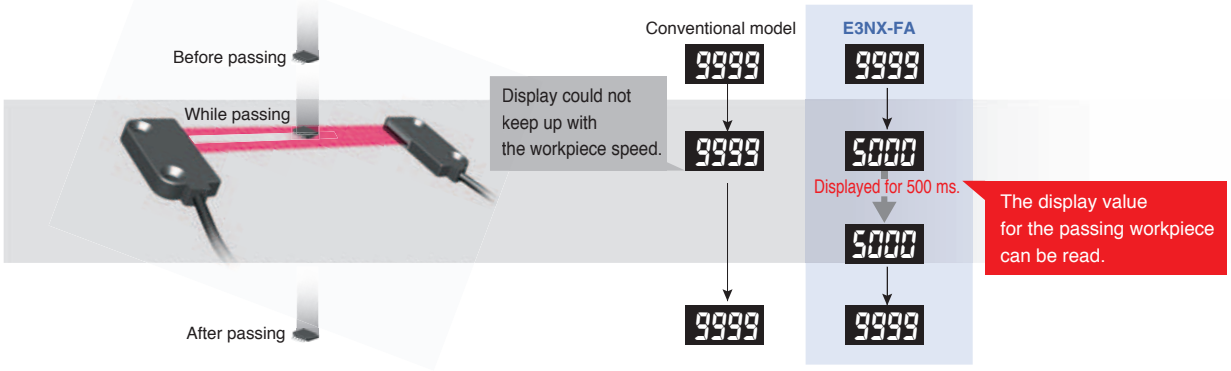

Point

Advanced DPC (Dynamic Power Control) PAT

Predictive Maintenance to Reduce Downtime

An alarm output* has been added to the DPC that automatically compensates differences in the incident level. A maintenance signal is output when the incident level drops due to dirt or vibration for use in predictive maintenance. (We recommend DPC for through-beam or retro-reflective models.)

*An alarm output is supported only on models with two outputs.

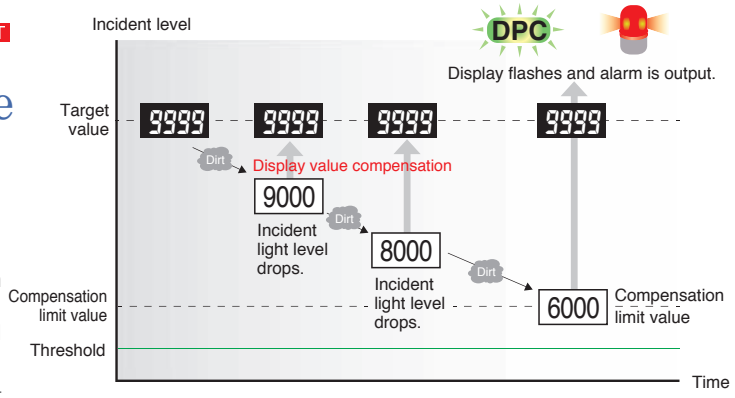

N-Smart Introduction to the N-Smart Series

The IoT platform that enables you to see, complete a lineup, and deliver

Winner of the Good Design Award



Common Features and Models in the N-Smart Series

Common Buttons

Intuitive Operation and Easy Setup.

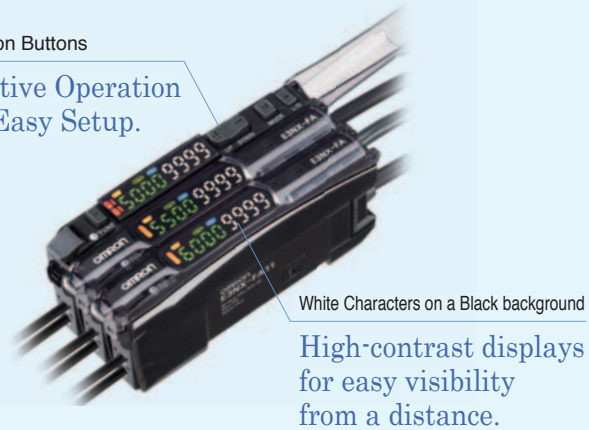

High-contrast displays for easy visibility from a distance.

Models with Wire-saving Connectors Popular

No Master/Slave Distinctions in Amplifier Units

- **Reduce model numbers in stock**
  You do not need to stock both master and slave amplifier units.
- **Greatly reduced wiring work**
  Power is supplied from the Master Connector. Slave Connectors have only output lines.
- **Expansion is easy and reliable**
  Mutual interference prevention works even if you use a Master Connector instead of a Slave Connector or combine them with pre-wired models.

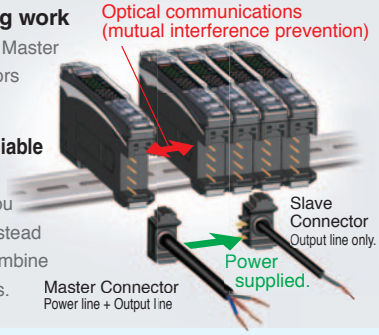

Model for Sensor Communications Unit

Data Management and Time Reduction with Network Communications

- **Three communications methods are supported**
- **Use Distributed Sensor Units to reduce equipment production costs and commissioning time**

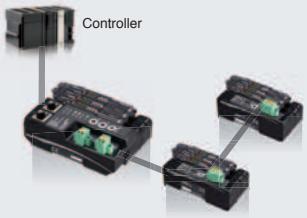

EtherCAT
CompoNet
CC-Link V2

E3NW Cat.No.E428

Model for Sensor Communications Unit (With wired output) NEW

Offers Both Network Communications and High-speed Response

- **Communications model with a wired output**
  Network communications can be used for an application that requires a high-speed response.
- **Greatly reduced wiring work**
  Power is supplied from the E3NW Sensor Communications Units.



Ordering Information

Fiber Amplifier Units (Dimensions ➜ pages 10 and 11)

Type	Connecting method	Appearance	Inputs/outputs	Model	
				NPN output	PNP output
Standard models	Pre-wired (2 m)		1 output	**E3NX-FA11 2M**	**E3NX-FA41 2M**
				E3NX-FA11-5 2M ✻1	---
	Wire-saving Connector		1 output	**E3NX-FA6**	**E3NX-FA8**
Advanced models	Pre-wired (2 m)		2 outputs + 1 input	**E3NX-FA21 2M**	**E3NX-FA51 2M**
	Wire-saving Connector		1 output + 1 input	**E3NX-FA7**	**E3NX-FA9**
			2 outputs	**E3NX-FA7TW**	**E3NX-FA9TW**
	M8 Connector		1 output + 1 input	**E3NX-FA24**	**E3NX-FA54**
			2 outputs	---	**E3NX-FA54TW**
Infrared models	Pre-wired (2 m)		1 output	**E3NX-FAH11 2M**	**E3NX-FAH41 2M**
	Wire-saving Connector		1 output	**E3NX-FAH6**	**E3NX-FAH8**
Analog output models	Pre-wired (2 m)		2 outputs	**E3NX-FA11AN 2M**	**E3NX-FA41AN 2M**
Model for Sensor Communications Unit ✻2	Connector for Sensor Communications Unit		---	**E3NX-FA0**	
				E3NX-FAH0	
	Connector for Sensor Communications Unit Pre-wired (2 m)		1 output	**E3NX-FA10 2M**	**E3NX-FA40 2M**

✻1. This type can prevent mutual interference for two units in the SHS2 mode.
✻2. A Sensor Communications Unit is required if you want to use the Fiber Amplifier Unit on a network.

Accessories (Sold Separately)

Wire-saving Connectors (Required for models for Wire-saving Connectors.)

Connectors are not provided with the Fiber Amplifier Unit and must be ordered separately. Note: Protective stickers are provided.

Type	Appearance	Cable length	No. of conductors	Model	Applicable Fiber Amplifier Units
Master Connector		2 m	4	**E3X-CN21**	**E3NX-FA7 E3NX-FA7TW E3NX-FA9 E3NX-FA9TW**
Slave Connector			2	**E3X-CN22**	
Master Connector			3	**E3X-CN11**	**E3NX-FA6 E3NX-FA8 E3NX-FAH6 E3NX-FAH8**
Slave Connector			1	**E3X-CN12**	

Sensor I/O Connectors (Required for models for M8 Connectors.)

Connectors are not provided with the Fiber Amplifier Unit and must be ordered separately.

Size	Cable	Appearance		Cable type		Model
M8	Standard cable	Straight		2m	4-wire	XS3F-M421-402-A
				5m		XS3F-M421-405-A
		L-shaped		2m		XS3F-M422-402-A
				5m		XS3F-M422-405-A

Mounting Bracket

A Mounting Bracket is not provided with the Fiber Amplifier Unit. It must be ordered separately as required.

Appearance	Model	Quantity
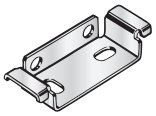	**E39-L143**	1

DIN Track

A DIN Track is not provided with the Fiber Amplifier Unit. It must be ordered separately as required.

Appearance	Type	Model	Quantity
	Shallow type, total length: 1 m	**PFP-100N**	1
	Shallow type, total length: 0.5 m	**PFP-50N**	
	Deep type, total length: 1 m	**PFP-100N2**	

End Plate

Two End Plates are provided with the Sensor Communications Unit. End Plates are not provided with the Fiber Amplifier Unit. They must be ordered separately as required.

Appearance	Model	Quantity
	**PFP-M**	1

Cover

Attach these Covers to Amplifier Units.
Order a Cover when required, e.g., if you lose the covers.

Appearance	Model	Quantity
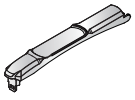	**E39-G25 FOR E3NX-FA**	1

Related Products

Sensor Communications Units

Type	Appearance	Model
Sensor Communications Unit for EtherCAT		**E3NW-ECT**
Sensor Communications Unit for CompoNet		**E3NW-CRT ✻1**
Sensor Communications Unit for CC-Link		**E3NW-CCL**
Distributed Sensor Unit ✻2		**E3NW-DS**

Refer to your OMRON website for details.
✻1. E3NX-FAH0 can not be connected.
✻2. The Distributed Sensor Unit can be connected to any of the Sensor Communications Units.

EtherCAT® is a registered trademark and patented technology, licensed by Beckhoff Automation GmbH, Germany.
CompoNet is a registered trademark of the ODVA.
CC-Link is a registered trademark of Mitsubishi Electric Corporation. The trademark is managed by the CC-Link Partner Association.

Ratings and Specifications

Standard models/ Advanced models/ Infrared models

Item		Type	Standard models			Advanced models					Infrared models	
		NPN output	E3NX-FA11	E3NX-FA6	E3NX-FA11-5※1	E3NX-FA21	E3NX-FA7	E3NX-FA7TW	E3NX-FA24	---	E3NX-FAH11	E3NX-FAH6
		PNP output	E3NX-FA41	E3NX-FA8	---	E3NX-FA51	E3NX-FA9	E3NX-FA9TW	E3NX-FA54	E3NX-FA54TW	E3NX-FAH41	E3NX-FAH8
		Connecting method	Pre-wired	Wire-saving Connector	Pre-wired	Pre-wired	Wire-saving Connector		M8 Connector		Pre-wired	Wire-saving Connector
Inputs/ outputs	Outputs		1 output			2 outputs	1 output	2 outputs	1 output	2 outputs	1 outputs	
	External inputs		---			1 input	1 input	---	1 input	---	---	
Light source (wavelength)			Red, 4-element LED (625 nm)								Infrared LED (870nm)	
Power supply voltage			10 to 30 VDC, including 10% ripple (p-p)									
Power consumption ※2			At Power supply voltage of 24 VDC Standard Models: Normal mode : 840 mW max. (Current consumption at 35 mA max.) Eco function ON : 650 mW max. (Current consumption at 27 mA max.) Eco function LO : 750 mW max. (Current consumption at 31 mA max.) Advanced Models or Model for Sensor Communications Unit: Normal mode : 920 mW max. (Current consumption at 38 mA max.) Eco function ON : 680 mW max. (Current consumption at 28 mA max.) Eco function LO : 800 mW max. (Current consumption at 33 mA max.) Infrared models: Normal mode : 1080 mW max. (Current consumption at 45 mA max.) Eco function ON : 920 mW max. (Current consumption at 38 mA max.) Eco function LO : 1020 mW max. (Current consumption at 42 mA max.)									
Control output			Load power supply voltage: 30 VDC max., open-collector output (depends on the NPN/PNP output format) Load current: Groups of 1 to 3 Amplifier Units: 100 mA max., Groups of 4 to 30 Amplifier Units: 20 mA max. (Residual voltage: At load current of less than 10 mA: 1 V max. At load current of 10 to 100 mA: 2 V max.) OFF current: 0.1 mA max.									
Response time	Super-high-speed mode (SHS)		Operate or reset for model with 1 output: 30 μs (Super High Speed mode (SHS2) of E3NX-FA11-5 is 60 μs each), with 2 outputs: 32 μs									
	High-speed mode (HS)		Operate or reset: 250 μs									
	Standard mode (Stnd)		Operate or reset: 1 ms									
	Giga-power mode (GIGA)		Operate or reset: 16 ms									
Maximum connectable Units			30									
No. of Units for mutual interference prevention ※3	Super-high-speed mode (SHS)		0 **Note:** 2 units when the detection mode is set to Super High Speed mode (SHS2), and for other models, the mutual interference prevention function is disabled.									
	High-speed mode (HS)		10									
	Standard mode (Stnd)		10									
	Giga-power mode (GIGA)		10									
Functions			Auto power control (APC), dynamic power control (DPC), timer, zero reset, resetting settings, eco mode, bank switching, power tuning, and hysteresis width									

* Refer to E3NX-FA/ Fiber Amplifier on your OMRON website for details.

※1. This type can prevent mutual interference for two units in the SHS2 mode.

※2. At Power supply voltage of 10 to 30 VDC

Standard Models:
Normal mode : 990 mW max. (Current consumption: 33 mA max. at 30 VDC, 65 mA max. at 10 VDC)
Eco function ON : 780 mW max. (Current consumption: 26 mA max. at 30 VDC, 42 mA max. at 10 VDC)
Eco function LO : 840 mW max. (Current consumption: 28 mA max. at 30 VDC, 45 mA max. at 10 VDC)

Advanced Models:
Normal mode : 1,020 mW max. (Current consumption: 34 mA max. at 30 VDC, 67 mA max. at 10 VDC)
Eco function ON : 810 mW max. (Current consumption: 27 mA max. at 30 VDC, 44 mA max. at 10 VDC)
Eco function LO : 870 mW max. (Current consumption: 29 mA max. at 30 VDC, 48 mA max. at 10 VDC)

Infrared models:
Normal mode : 1,260 mW max. (Current consumption: 42 mA max. at 30 VDC, 80 mA max. at 10 VDC)
Eco function ON : 1,050 mW max. (Current consumption: 35 mA max. at 30 VDC, 60 mA max. at 10 VDC)
Eco function LO : 1,140 mW max. (Current consumption: 38 mA max. at 30 VDC, 70 mA max. at 10 VDC)

※3. The tuning will not change the number of units. The least unit count among the mutual interference prevention units of E3NX and E3NC. Check the mutual interference prevention unit count and response speed of each model.

Analog output models/ Model for Sensor Communications Unit

Item		Type	Analog output models	Model for Sensor Communications Unit		
		NPN output	E3NX-FA11AN	E3NX-FA10	E3NX-FA0	E3NX-FAH0
		PNP output	E3NX-FA41AN	E3NX-FA40		
		Connecting method	Pre-wired	Connector for Sensor Communications Unit Pre-wired	Connector for Sensor Communications Unit	
Inputs/ outputs	Outputs		2 outputs	1 outputs	--- ✻1	
	External inputs		---	---		
Light source (wavelength)			Red, 4-element LED (625 nm)			Infrared LED (870nm)
Power supply voltage			10 to 30 VDC, including 10% ripple (p-p)	Supplied from the connector through the communication units.		
Power consumption ✻2			At Power supply voltage of 24 VDC Normal mode : 960 mW max. (Current consumption at 40 mA max.) Eco function ON: 770 mW max. (Current consumption at 32 mA max.) Eco function LO : 870 mW max. (Current consumption at 36 mA max.)	At Power supply voltage of 24 VDC Normal mode : 920 mW max. (Current consumption at 38 mA max.) Eco function ON: 680 mW max. (Current consumption at 26 mA max.) Eco function LO : 800 mW max. (Current consumption at 33 mA max.)		At Power supply voltage of 24 VDC Normal mode : 1,080 mW max. (Current consumption at 45 mA max.) Eco function ON: 920 mW max. (Current consumption at 38 mA max.) Eco function LO : 1,020 mW max. (Current consumption at 42 mA max.)
Control output			Load power supply voltage: 30 VDC max., open-collector output (depends on the NPN/PNP output format) Load current: Groups of 1 to 3 Amplifier Units: 100 mA max., Groups of 4 to 30 Amplifier Units: 20 mA max. (Residual voltage: At load current of less than 10 mA: 1 V max. At load current of 10 to 100 mA: 2 V max.) OFF current: 0.1 mA max.		---	
Analog output (reference value)			Voltage output: 1-5 VDC (10 kΩ or more connected load), temperature characteristics: 0.3% F.S. / °C	---		
Control output Response time	Super-high-speed mode (SHS)		Operate or reset: 80 µs	Operate or reset: 32 µs		
	High-speed mode (HS)		Operate or reset: 250µs	Operate or reset: 250 µs		
	Standard mode (Stnd)		Operate or reset: 1 ms	Operate or reset: 1 ms		
	Giga-power mode (GIGA)		Operate or reset: 16 ms	Operate or reset: 16 ms		
Maximum connectable Units			30	16	With E3NW-ECT: 30 units (When connected to an OMRON NJ-series Controller.) With E3NW-CRT: 16 units (Note: E3NX-FAH0 can not be connected.) With E3NW-CCL: 16 units	
No. of Units for mutual interference prevention ✻3	Super-high-speed mode (SHS)		0 (The mutual interference prevention function is disabled if the detection mode is set to super-high-speed mode.)			
	High-speed mode (HS)		10			
	Standard mode (Stnd)		10			
	Giga-power mode (GIGA)		10			
Functions			Auto power control (APC), dynamic power control (DPC), timer, zero reset, resetting settings, eco mode, bank switching, power tuning, and hysteresis width			

* Refer to E3NX-FA/ Fiber Amplifier on your OMRON website for details.

✻1. Two sensor outputs are allocated in the programmable logic controller PLC I/O table.
PLC operation via Communications Unit enables reading detected values and changing settings.

✻2. At Power supply voltage of 10 to 30 VDC
Analog output models:
Normal mode : 1,080 mW max. (Current consumption: 36 mA max. at 30 VDC, 75 mA max. at 10 VDC)
Eco function ON : 840 mW max. (Current consumption: 28 mA max. at 30 VDC, 55 mA max. at 10 VDC)
Eco function LO : 960 mW max. (Current consumption: 32 mA max. at 30 VDC, 65 mA max. at 10 VDC)

✻3. The tuning will not change the number of units.
The least unit count among the mutual interference prevention units of E3NX and E3NC.
Check the mutual interference prevention unit count and response speed of each model.

Dimensions

(Unit: mm)
Tolerance class IT16 applies to dimensions in this data sheet unless otherwise specified.

Fiber Amplifier Units

Pre-wired Amplifier Units

E3NX-FA□1(-5)
E3NX-FAH□1
E3NX-FA□AN



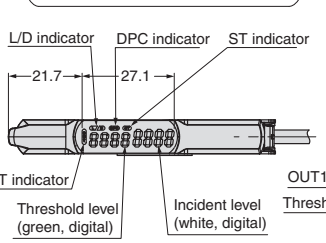

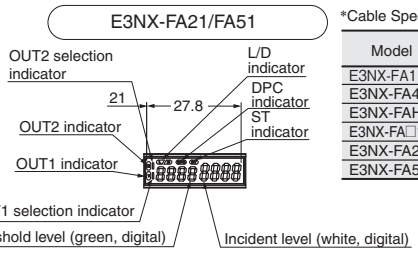

*Cable Specifications

Model	Outer diameter	No. of conductors	Others
E3NX-FA11(-5)	4.0 dia.	3	Conductor cross-section: 0.2 mm²
E3NX-FA41			Insulator dia.: 0.9 mm
E3NX-FAH□1		4	Standard cable length: 2 m
E3NX-FA□1AN			Minimum bending radius: 12 mm
E3NX-FA21	4.0 dia.	5	
E3NX-FA51			

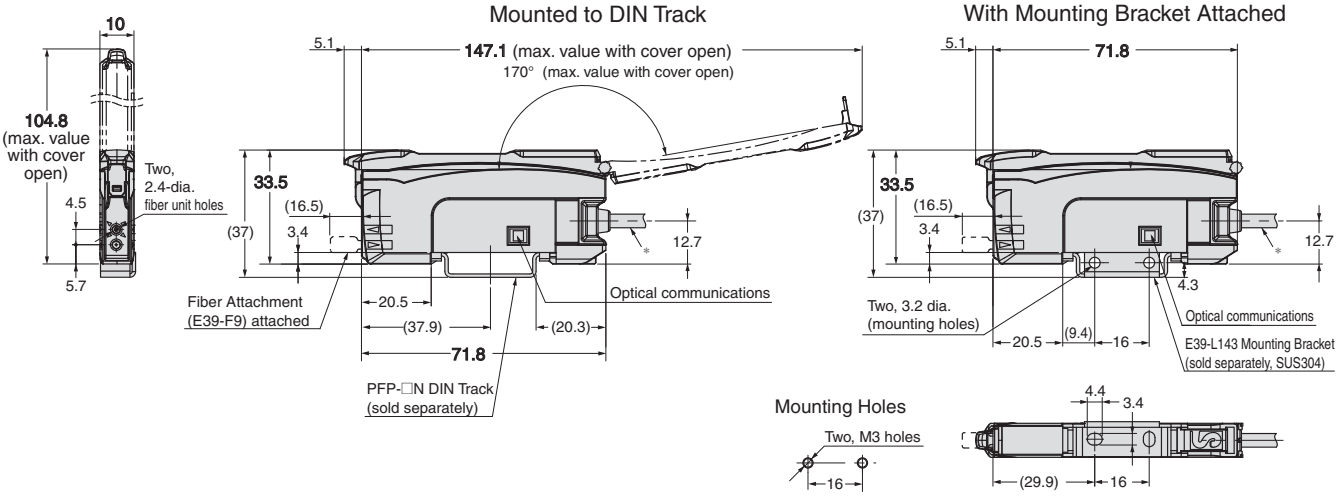

Amplifier Units with Wire-saving Connectors

E3NX-FA6
E3NX-FA7(TW)
E3NX-FA8
E3NX-FA9(TW)
E3NX-FAH6
E3NX-FAH8



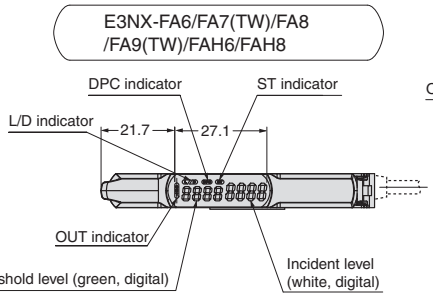

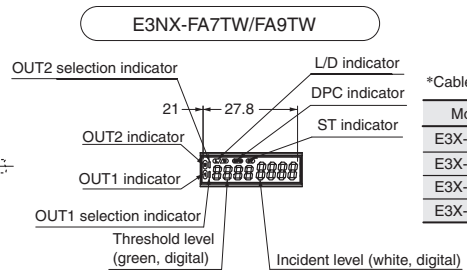

*Cable Specifications

Model	Outer diameter	No. of conductors
E3X-CN12	2.6 dia.	1
E3X-CN22	4.0 dia.	2
E3X-CN11		3
E3X-CN21		4

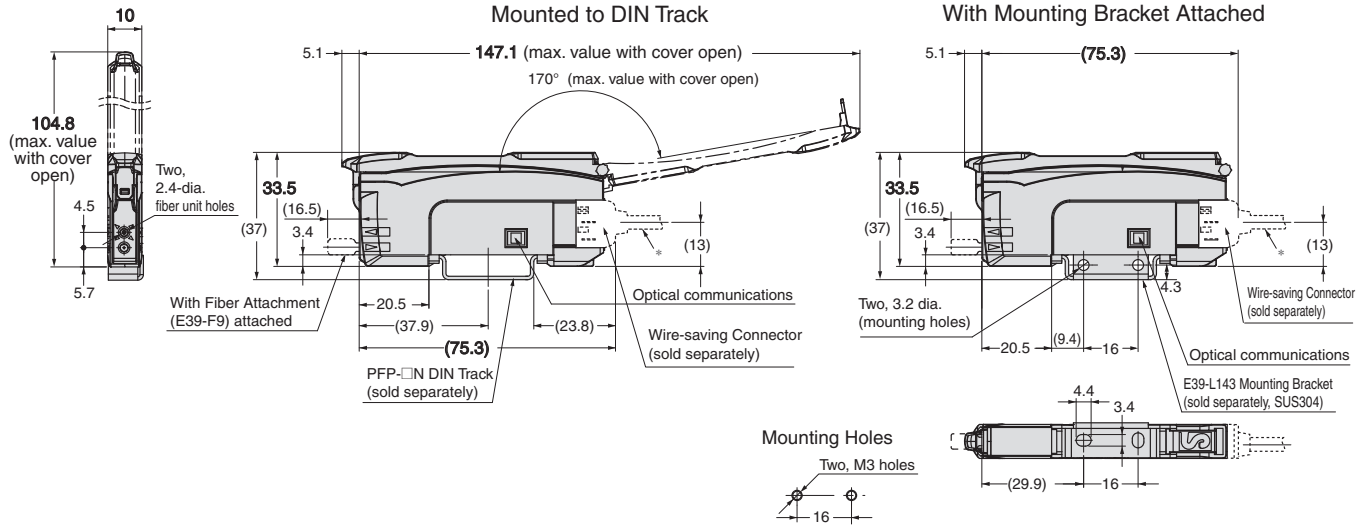

Amplifier Units with M8 Connectors

E3NX-FA24
E3NX-FA54
E3NX-FA54TW



E3NX-FA24/FA54

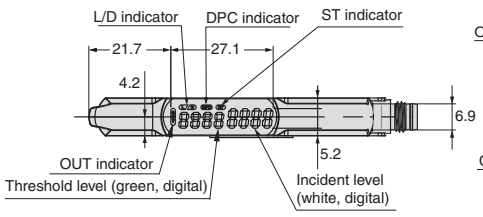

E3NX-FA54TW

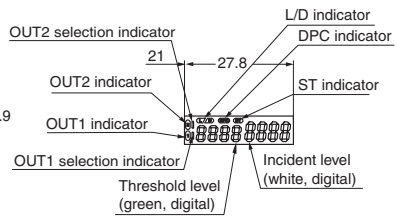

Connector pin arrangement

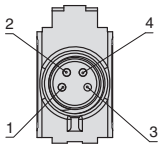

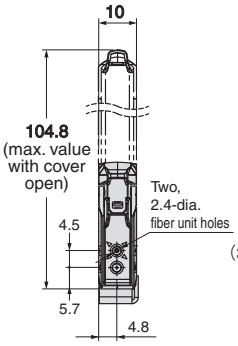

Mounted to DIN Track

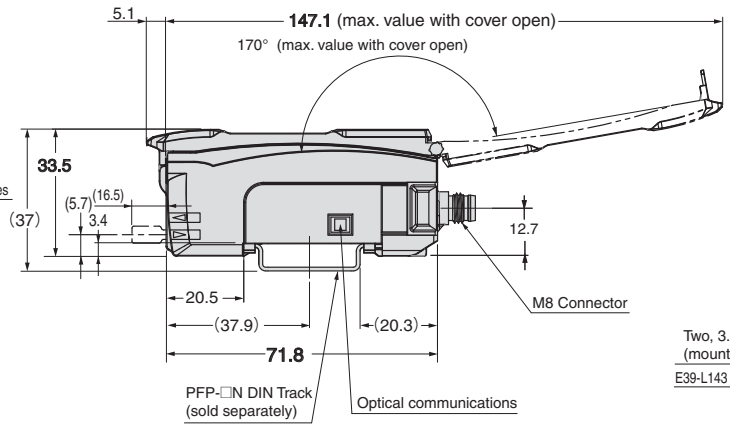

With Mounting Bracket Attached

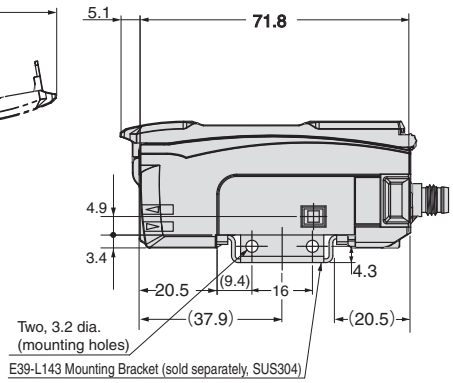

Mounting Holes

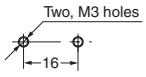

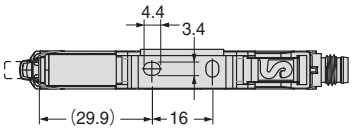

Amplifier Unit with Connector for Sensor Communications Unit

E3NX-FA0/FAH0/FA10/FA40



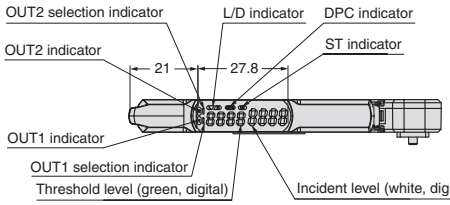

Mounted to DIN Track

E3NX-FA0/FAH0

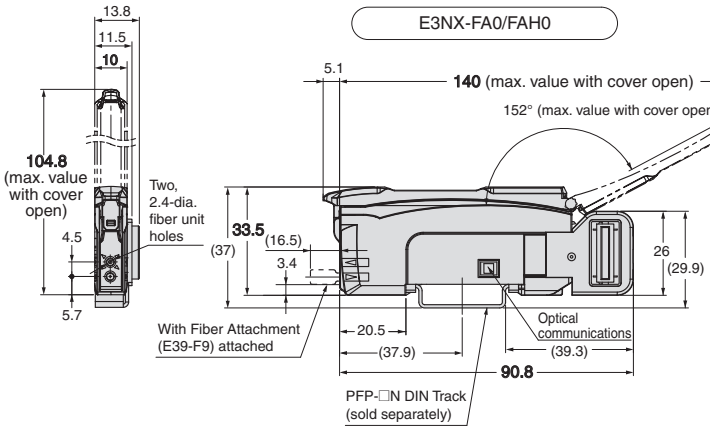

E3NX-FA10/FA40

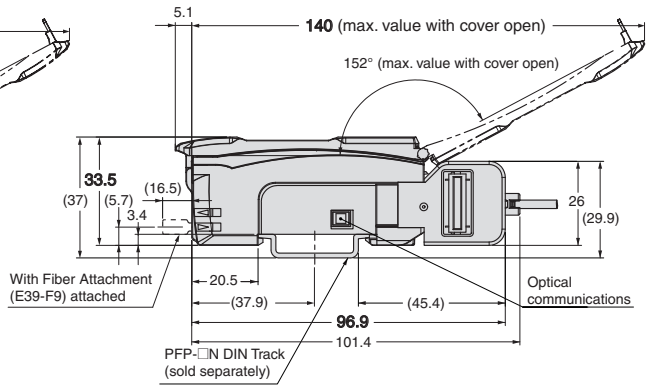

Introduction to New Fiber Units

A New Standard: Build-in Lens Series

Hex Shape

E32-LT11N
E32-LD11N

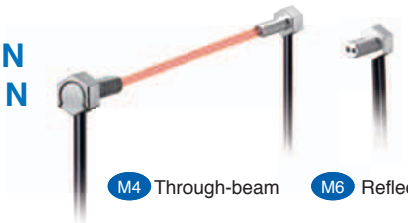

Straight Type

E32-LT11 (R)
E32-LD11 (R)

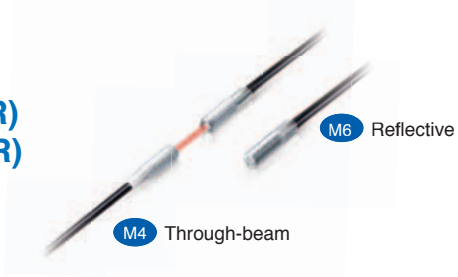

Flat Models

E32-LT35Z

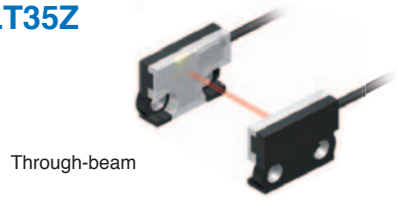

Oil-resistant

New release of the long-awaited M4 model

E32-T11NFS NEW
E32-T11NF

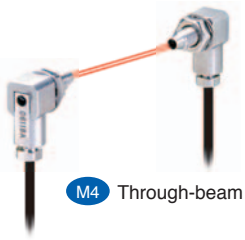

Fiber Sensor Best Selection Catalog

Refer to the Fiber Sensor Best Selection Catalog for information on the above Fiber Units and detailed information on the E3NX-FA.

Cat. No. E418



Compliance with International Standards

CE UL CERTIFIED *

* Only the E3NX-FA11, E3NX-FA21, E3NX-FA41 and E3NX-FA51 are certified for UL standards.

EtherCAT® is a registered trademark and patented technology, licensed by Beckhoff Automation GmbH, Germany.
CompoNet is a registered trademark of the ODVA.
CC-Link is a registered trademark of Mitsubishi Electric Corporation. The trademark is managed by the CC-Link Partner Association.

OMRON Corporation **Industrial Automation Company**
Kyoto, JAPAN
Contact: www.ia.omron.com

Regional Headquarters
OMRON EUROPE B.V.
Sensor Business Unit
Carl-Benz-Str. 4, D-71154 Nufringen, Germany
Tel: (49) 7032-811-0/Fax: (49) 7032-811-199

OMRON ELECTRONICS LLC
2895 Greenspoint Parkway, Suite 200
Hoffman Estates, IL 60169 U.S.A.
Tel: (1) 847-843-7900/Fax: (1) 847-843-7787

OMRON ASIA PACIFIC PTE. LTD.
No. 438A Alexandra Road # 05-05/08 (Lobby 2),
Alexandra Technopark,
Singapore 119967
Tel: (65) 6835-3011/Fax: (65) 6835-2711

OMRON (CHINA) CO., LTD.
Room 2211, Bank of China Tower,
200 Yin Cheng Zhong Road,
PuDong New Area, Shanghai, 200120, China
Tel: (86) 21-5037-2222/Fax: (86) 21-5037-2200

Authorized Distributor:

© OMRON Corporation 2012-2018 All Rights Reserved.
In the interest of product improvement,
specifications are subject to change without notice.

CSM_10_4_0420
Cat. No. E426-E1-06 0718(1212)