SYSMAC CJ-series CJ2H (Built-in EtherNet/IP) CPU Units

CJ2H-CPU6□-EIP

CSM_CJ2H-CPU-EIP_DS_E_11_4

Flagship PLCs with Built-in Multifunctional Ethernet Port

- Small, Fast, Flexible:
  The CJ2 CPU Units inherit and improve CJ1 features while also adding EtherNet/IP as a standard feature for high-speed, high-capacity Ethernet-based networking.



CJ2H-CPU6□-EIP

Features

- High-speed, high-capacity EtherNet/IP is built into every model.
- The CIP communications protocol is supported for direct access to multivendor devices.
- Tag memory provided for easy access from host PCs and PTs.
- Even more program memory and data memory.
- Superior high-speed control performance: LOAD instructions execute in 16 ns, SINE instructions in 0.59 μs.
- The more advanced motion control by the lower cost: Synchronous Unit Operation
- Increased I/O throughput speed by Immediate refreshing instructions with direct processing.

Windows are either registered trademarks or trademarks of Microsoft Corporation in the United States and/or other countries.
EtherNet/IP™ and DeviceNet™ are trademarks of the ODVA.
Other company names and product names in this document are the trademarks or registered trademarks of their respective companies.

Ordering Information

Applicable standards

Refer to the OMRON website (www.ia.omron.com) or ask your OMRON representative for the most recent applicable standards for each model.

CJ2H (Built-in EtherNet/IP) CPU Units

Product name	Specifications				Current consumption (A)		Model
	I/O capacity/Mountable Units (Expansion Racks)	Program capacity	Data memory capacity	LD instruction execution time	5 V	24 V	
CJ2H (Built-in EtherNet/IP) CPU Units 	2,560 points / 40 Units (3 Expansion Racks max.)	400K steps	832K words DM: 32K words EM: 32K words × 25 banks	0.016 μs	0.82 ✻	–	**CJ2H-CPU68-EIP**
		250K steps	512K words DM: 32K words EM: 32K words × 15 banks				**CJ2H-CPU67-EIP**
		150K steps	352K words DM: 32K words EM: 32K words × 10 banks				**CJ2H-CPU66-EIP**
		100K steps	160K words DM: 32K words EM: 32K words × 4 banks				**CJ2H-CPU65-EIP**
		50K steps	160K words DM: 32K words EM: 32K words × 4 banks				**CJ2H-CPU64-EIP**

✻ Add 0.15 A per Adapter when using NT-AL001 RS-232C/RS-422A Adapters.
Add 0.04 A per Adapter when using CJ1W-CIF11 RS-422A Adapters.

Accessories

The following accessories come with CPU Unit:

Item	Specification
Battery	CJ1W-BAT01
End Cover	CJ1W-TER01 (necessary to be mounted at the right end of CPU Rack)
End Plate	PFP-M (2 pcs)

Note: A serial port (RS-232C) connector is not provided. Purchase a connector separately for serial port connection.
Plug : XM3A-0921 (manufactured by OMRON) or equivalent
Hood : XM2S-0911-E (manufactured by OMRON) or equivalent

General Specifications

Item		CJ2H-				
		CPU64-EIP	CPU65-EIP	CPU66-EIP	CPU67-EIP	CPU68-EIP
Enclosure		Mounted in a panel				
Grounding		Less than 100 Ω				
CPU Rack Dimensions		90 mm × 65 mm × 80 mm (H × D × W)				
Weight ✻		280 g or less				
Current Consumption		5 VDC, 0.82 A				
Use Environment	Ambient Operating Temperature	0 to 55°C				
	Ambient Operating Humidity	10% to 90% (with no condensation)				
	Atmosphere	Must be free from corrosive gases.				
	Ambient Storage Temperature	−20 to 70°C (excluding battery)				
	Altitude	2,000 m or less				
	Pollution Degree	2 or less: Meets IEC 61010-2-201.				
	Noise Immunity	2 kV on power supply line (Conforms to IEC 61000-4-4.)				
	Overvoltage Category	Category II: Meets IEC 61010-2-201.				
	EMC Immunity Level	Zone B				
	Vibration Resistance	Conforms to IEC60068-2-6. 5 to 8.4 Hz with 3.5-mm amplitude, 8.4 to 150 Hz Acceleration of 9.8 m/s^2 for 100 min in X, Y, and Z directions (10 sweeps of 10 min each = 100 min total)				
	Shock Resistance	Conforms to IEC60068-2-27. 147 m/s^2, 3 times in X, Y, and Z directions (100 m/s^2 for Relay Output Units)				
Battery	Life	5 years at 25°C				
	Weight	Approx. 10 g				
	Model	CJ1W-BAT01				
Applicable Standards		Conforms to cULus, NK, LR and EC Directives.				

✻ Includes wight of end covers and battery.

Performance Specifications

Items			CJ2H-				
			CPU64-EIP	CPU65-EIP	CPU66-EIP	CPU67-EIP	CPU68-EIP
User Memory			50K steps	100K steps	150K steps	250K steps	400K steps
I/O Bits			2,560 bits				
Processing Speed	Overhead Processing Time		Normal Mode: 200 μs (If tag data links are used with EtherNet/IP, add the following to the above time: 100 μs + Number of transferred words × (0.33 μs or 0.87 μs ✻)) ✻ When High-speed interrupt function is used				
	Execution Time		Basic Instructions: 0.016 μs min.; Special Instructions: 0.048 μs min.				
	Interrupts	I/O Interrupts and External Interrupts	Interrupt task startup time : 26 μs or 17 μs ✻ (30 μs in unit Ver.1.0) Return time to cyclic task : 11 μs or 8 μs ✻ (15 μs in unit Ver.1.0) ✻ When High-speed interrupt function is used				
		Scheduled Interrupts	Interrupt task startup time : 22 μs or 13 μs ✻ (27 μs in unit Ver.1.0) Return time to cyclic task : 11 μs or 8 μs ✻ (15 μs in unit Ver.1.0) ✻ When High-speed interrupt function is used				
Maximum Number of Connectable Units			Total per CPU Rack or Expansion Rack: 10 Units max.; Total per PLC: 40 Units max.				
Maximum Number of Expansion Racks			3 max.				
CIO Area	I/O Area		2,560 bits (160 words): Words CIO 0000 to CIO 0159				
	Link Area		3,200 bits (200 words): Words CIO 1000 to CIO 1199				
	Synchronous Data Refresh Area		1,536 bits (96 words): Words CIO 1200 to CIO 1295				
	CPU Bus Unit Area		6,400 bits (400 words): Words CIO 1500 to CIO 1899				
	Special I/O Unit Area		15,360 bits (960 words): Words CIO 2000 to CIO 2959				
	DeviceNet Area		9,600 bits (600 words): Words CIO 3200 to CIO 3799				
	Internal I/O Area		3,200 bits (200 words): Words CIO 1300 to CIO 1499 37,504 bits (2,344 words): Words CIO 3800 to CIO 6143 Cannot be used for external I/O.				
Work Area			8,192 bits (512 words): Words W000 to W511 Cannot be used for external I/O.				
Holding Area			8,192 bits (512 words): Words H000 to H511 Bits in this area maintain their ON/OFF status when PLC is turned OFF or operating mode is changed. Words H512 to H1535: These words can be used only for function blocks. They can be used only for function block instances (i.e., they are allocated only for internal variables in function blocks).				
Auxiliary Area			Read-only: 31,744 bits (1,984 words) • 7,168 bits (448 words): Words A0 to A447 • 24,576 bits (1,536 words): Words A10000 to A11535 ✻ Read/write: 16,384 bits (1,024 words) in words A448 to A1471 ✻ ✻ A960 to A1471 and A10000 to A11535 cannot be accessed by CPU Bus Units, Special I/O Units, PTs, and Support Software that do not specifically support the CJ2 CPU Units.				
Temporary Area			16 bits: TR0 to TR15				
Timer Area			4,096 timer numbers (T0000 to T4095 (separate from counters))				
Counter Area			4,096 counter numbers (C0000 to C4095 (separate from timers))				
DM Area			32k words ✻ DM Area words for Special I/O Units: D20000 to D29599 (100 words × 96 Units) DM Area words for CPU Bus Units: D30000 to D31599 (100 words × 16 Units) ✻ Bits in the EM Area can be addressed either by bit or by word. These bits cannot be addressed by CPU Bus Units, Special I/O Units, PTs, and Support Software that do not specifically support the CJ2 CPU Units.				
EM Area			32k words/bank × 25 banks max.: E00_00000 to E18_32767 max. ✻1 ✻2 **✻1.** Bits in the EM Area can be addressed either by bit or by word. These bits cannot be addressed by CPU Bus Units, Special I/O Units, PTs, and Support Software that do not specifically support the CJ2 CPU Units. **✻2.** EM banks D to 18 cannot be accessed by CPU Bus Units, Special I/O Units, PTs, and Support Software that do not specifically support the CJ2 CPU Units. **✻3.** Force-set/reset to the EM Area is enabled by specifying a start bank in parameter settings. (unit version 1.2 or higher)				
			32K words × 4 banks	32K words × 4 banks	32K words × 10 banks	32K words × 15 banks	32K words × 25 banks
	Force-S/R Enabled Banks	When EM force-S/R function is used ✻3	Bank 0 to 3	Bank 0 to 3	Bank 0 to 9	Bank 0 to E	Bank 0 to 18
		When automatic address allocation is specified	Bank 3	Bank 3	Bank 6 to 9	Bank 7 to E	Bank 11 to 18
Index Registers			IR0 to IR15 These are special registers for storing PLC memory addresses for indirect addressing. (Index Registers can be set so that they are unique in each task or so that they are shared by all tasks.)				
Cyclic Task Flag Area			128 flags				
Memory Card			128 MB, 256 MB, or 512 MB				
Operating Modes			PROGRAM Mode: Programs are not executed. Preparations can be executed prior to program execution in this mode. MONITOR Mode: Programs are executed, and some operations, such as online editing, and changes to present values in I/O memory, are enabled in this mode. RUN Mode: Programs are executed. This is the normal operating mode.				
Execution Mode			Normal Mode				

Items		CJ2H-				
		CPU64-EIP	CPU65-EIP	CPU66-EIP	CPU67-EIP	CPU68-EIP
Programming Languages		Ladder Logic (LD), Sequential Function Charts (SFC), Structured Text (ST), and Instruction Lists (IL)				
Function Blocks	Maximum number of definitions	2,048				
	Maximum number of instances	2,048				
Tasks	Type of Tasks	Cyclic tasks Interrupt tasks (Power OFF interrupt tasks, scheduled interrupt tasks, I/O interrupt tasks, and external interrupt tasks)				
	Number of Tasks	Cyclic tasks: 128 Interrupt tasks: 256 (Interrupt tasks can be defined as cyclic tasks to create extra cyclic tasks. Therefore, the total number of cyclic tasks is actually 384 max.)				
Symbols (Variables)	Type of Symbols	• Local symbols: Can be used only within a single task in the PLC. • Global symbols: Can be used in all tasks in the PLC. • Network symbols (tags): I/O memory in the CPU Unit can be externally accessed using symbols, depending on parameter settings.				
	Data Type of Symbols	• BOOL (bit) • UINT (one-word unsigned binary) • UDINT (two-word unsigned binary) • ULINT (four-word unsigned binary) • INT (one-word signed binary) • DINT (two-word signed binary) • LINT (four-word signed binary) • UINT BCD (one-word unsigned BCD) ✻1 • UDINT BCD (two-word unsigned BCD) ✻1 • ULINT BCD (four-word unsigned BCD) ✻1 • REAL (two-word floating-point) • LREAL (four-word floating-point) • CHANNEL (word) ✻1 • NUMBER (constant or number) ✻1 • WORD (one-word hexadecimal) • DWORD (two-word hexadecimal) • LWORD (four-word hexadecimal) • STRING (1 to 255 ASCII characters) • TIMER (timer) ✻2 • COUNTER (counter) ✻2 • User defined data types (data structures) ✻3 **✻1.** Cannot be used in Function blocks **✻2.** Can be used only in Function blocks **✻3.** Supported only when CX-Programmer version 9.0 or later is used				
	Maximum Size of Symbol	32k words				
	Array Symbols (Array Variables)	One-dimensional arrays				
	Number of Array Elements	32,000 elements max.				
	Number of Registrable Network Symbols (Tags)	20,000 max.				
	Length of Network Symbol (Tag) Name	255 bytes max.				
	Encoding of Network Symbols (Tags)	UTF-8				
Data Tracing	Memory Capacity	8,000 words		16,000 words	32,000 words	
		(The EM Area can be specified from the CX-Programmer to use up to 32K words multiplied by the number of banks supported by the CPU Unit model.)				
	Number of Samplings	Bits = 31, one-word data =16, two-word data = 8, four-word data = 4				
	Sampling Cycle	1 to 2,550 ms (Unit: 1 ms)				
	Trigger Conditions	ON/OFF of specified bit Data comparison of specified word Data size: 1 word, 2 words, 4 words Comparison Method: Equals (=), Greater Than (>), Greater Than or Equals (≥), Less Than (<), Less Than or Equals (≤), Not Equal (≠)				
	Delay Value	−32,768 to +32,767 ms				
File Memory		Memory Card (128, 256, or 512 Mbytes) (Use the Memory Cards provided by OMRON.) EM file memory (Part of the EM Area can be converted for use as file memory.)				
Source/ Comment Memory	Program sources, comments, program indexes, symbol tables	Capacity: 3.5 Mbytes				

Item				CJ2H-				
				CPU64-EIP	CPU65-EIP	CPU66-EIP	CPU67-EIP	CPU68-EIP
Communications	Logical Ports for Communications		Logical Ports	8 ports (Used for SEND, RECV, CMND, PMCR, TXDU, and RXDU instructions.)				
			Extended Logical Ports	64 ports (Used for SEND2, RECV2, CMND2, and PMCR2 instructions.)				
	CIP Communications Specification		Class 3 (Connection Type)	Number of connections: 128				
			UCMM (Non-connection Type)	Maximum number of clients that can communicate at the same time: 32 Maximum number of servers that can communicate at the same time: 32				
	Peripheral (USB) Port			USB 2.0-compliant B-type connector				
		Baud Rate		12 Mbps max.				
		Transmission Distance		5 m max.				
	Serial Port			Interface: Conforms to EIA RS-232C.				
		Communications Method		Half-duplex				
		Synchronization Method		Start-stop				
		Baud Rate		0.3, 0.6, 1.2, 2.4, 4.8, 9.6, 19.2, 38.4, 57.6, or 115.2 (kbps)				
		Transmission Distance		15 m max.				
	EtherNet/IP Port			–				
	Transmission Specifications	Media Access Method		CSMA/CD				
		Modulation		Baseband				
		Transmission Paths		Star				
		Baud Rate		100 Mbps (100Base-TX)				
		Transmission Media		Shielded twisted-pair (STP) cable; Categories: 5, 5e				
		Transmission Distance		100 m (between hub and node)				
		Number of Cascade Connections		No restrictions if switching hub is used.				
	Communications Specifications	CIP Communications: Tag Data Links		–				
			Number of Connections	256				
			Packet Interval (Refresh period)	0.5 to 10,000 ms (Unit: 0.5 ms) Can be set for each connection. (Data will be refreshed at the set interval, regardless of the number of nodes.)				
			Maximum allowed communications bandwidth per Unit	6,000 to 12,000 pps ✻1 ✻2				
			Number of Registerable Tag	256				
			Type of Tags	CIO, DM, EM, HR, WR, and Network symboles				
			Number of Tags per Connection	8 (Seven tags if PLC status is included in the segment.)				
			Maximum Link Data Size per Node	184,832 words				
			Maximum Data Size per Connection	252 or 722 words ✻3 (Data is synchronized within each connection.)				
			Number of Registrable Tag Set	256 (1 connection = 1 segment)				
			Maximum Tag Set Size	722 words (One word is used when PLC status is included in the segment.)				
			Maximum Number of Tags Refreshable in a Single Cycle of CPU Unit ✻4	Output/send (CPU Unit to EtherNet/IP): 256 Input/receive (EtherNet/IP to CPU Unit): 256				
			Data Size Refreshable in a Single Cycle of CPU Unit ✻4	Output/send (CPU to EtherNet/IP): 6,432 words Input/receive (EtherNet/IP to CPU): 6,432 words				
			Change of Tag Data Link Parameter Settings during Operation	OK ✻5				
			Multi-cast Packet Filter ✻6	OK				
		CIP Communications: Explicit Messages		–				
			Class 3 (Connection Type)	Number of connections: 128				
			UCMM (Non-connection Type)	Maximum number of clients that can communicate at the same time: 32 Maximum number of servers that can communicate at the same time: 32				
			CIP Routing	OK (CIP routing is enabled for the following remote Units: CJ1W-EIP21/EIP21S, CJ2H-CPU6□-EIP, CJ2M-CPU3□, and CS1W-EIP21/EIP21S.)				
		FINS Communications		–				
			FINS/UDP	OK				
			FINS/TCP	16 connections max.				
		EtherNet/IP Conformance Test		Conforms to A5.				
		EtherNet/IP Interface		10Base-T/100Base-TX Auto Negotiation/Fixed Setting				

∗1. "Packets per second" is the number of communications packets that can be processed per second.
∗2. When using the EtherNet/IP Unit with version 3.0 or later. When using the EtherNet/IP Unit with version 2.1 or earlier, the maximum allowed communications bandwidth per Unit is 6,000 pps. When using the EtherNet/IP Unit with version 3.0 or later, the Network Configurator with version 3.57 or higher is required.
∗3. Large Forward Open (CIP optional specification) must be supported in order for 505 to 1,444 bytes to be used as the data size. Application is supported between CS/CJ-series PLCs. When connecting to devices from other manufacturers, make sure that the devices support the Large Forward Open specification.
∗4. If the maximum number is exceeded, refreshing will require more than one CPU Unit cycle.
∗5. When changing parameters, however, the EtherNet/IP port where the change is made will be restarted. In addition, a timeout will temporarily occur at the other node that was communicating with that port, and it will then recover automatically.
∗6. The EtherNet/IP port supports an IGMP client, so unnecessary multicast packets are filtered by using a switching hub that supports IGMP snooping.

Function Specifications

Functions				Description
Cycle Time Management	Minimum Cycle Time			A minimum cycle time can be set. (0.2 to 32,000 ms; Unit: 0.1 ms) The minimum cycle time setting can be changed in MONITOR mode. (Unit version 1.1 or higher)
	Cycle Time Monitoring			The cycle time is monitored. (0.01 to 40,000 ms; Unit: 0.01 ms)
	Background Processing			Instructions with long execution times can be executed over multiple cycles to prevent fluctuations in the cycle time.
Unit (I/O) Management	Basic I/O Units, Special I/O Units, and CPU Bus Units	I/O Refreshing	Cyclic Refreshing	Cyclic refreshing of Basic I/O Units, Special I/O Units, and CPU Bus Units
			Immediate Refreshing	I/O refreshing by immediate refreshing instructions
			Refreshing by IORF	I/O refreshing by IORF instruction
		Unit Recognition at Startup		The number of units recognized when the power is turned ON is displayed.
	Basic I/O Units	Input Response Time Setting		The input response times can be set for Basic I/O Units. The response time can be increased to reduce the effects of chattering and noise at input contacts. The response time can be decreased to enable detecting shorter input pulses.
		Load OFF Function		All of the outputs on Basic I/O Units can be turned OFF when an error occurs in RUN or MONITOR mode.
		Basic I/O Unit Status Monitoring		Alarm information can be read from Basic I/O Units and the number of Units recognized can be read.
	Special I/O Units and CPU Bus Units	Unit Restart Bits to Restart Units		A Special I/O Unit or CPU Bus Unit can be restarted.
		Synchronous Unit Operation		The start of processing for all the specified Units can be synchronized at a fixed interval. Maximum number of Units: 10 Units (Only Units that support Synchronous Operation Mode can be used.) Synchronous operation cycle: 0.5 to 10 ms (default: 2 ms) Maximum number of words for synchronous data refreshing: 96 words (total of all Units)
	Configuration Management	Automatic I/O Allocation at Startup		I/O words can be automatically allocated to the Basic I/O Units that are connected in the PLC to start operation automatically without registering Units into I/O tables.
		I/O Table Creation		The current unit configuration can be registered in I/O tables to prevent it from being changed, to reserve words, and to set words.
		Rack/Slot First Word Settings		The first words allocated to a Units on the Racks can be set.
Memory Management	Holding I/O Memory when Changing Operating Modes			The status of I/O memory can be held when the operating mode is changed or power is turned ON. The forced-set/reset status can be held when the operating mode is changed or power is turned ON.
	File Memory			Files (such as program files, data files, and symbol table files) can be stored in Memory Card, EM File Memory, or Comment Memory.
	Built-in Flash Memory			The user program and Parameter Area can be backed up to an internal flash memory when they are transferred to the CPU Unit.
	EM File Function			Parts of the EM Area can be treated as file memory.
	Storing Comments			I/O comments can be stored as symbol table files in a Memory Card, EM file memory, or comment memory.
	EM Configuration			EM Area can be set as trace memory or EM file memory.
Memory Cards	Automatic File Transfer at Startup			A program file and parameter files can be read from a Memory Card when the power is turned ON.
	Program Replacement during PLC Operation			The whole user program can be read from a Memory Card to CPU Unit during operation.
	Function for Reading and Writing Data from a Memory Card			Data in I/O memory in the CPU Unit can be written to a Memory Card in CSV/TXT format. Data in CSV/TXT format in the Memory Card can be read to I/O memory in the CPU Unit.

Function				Description
Communications				–
	Peripheral (USB) Port		Peripheral Bus	Bus for communications with various kinds of Support Software running on a personal computer. High-speed communications are supported.
	Serial Port			–
		Host Link (SYSWAY) Communications		Host Link commands or FINS commands placed between Host Link headers and terminators can be sent from a host computer or PT to read/write I/O memory, read/control the operating mode, and perform other operations for PLC.
		No-protocol Communications		I/O instructions for communications ports (such as TXD/RXD instructions) can be used for data transfer with peripheral devices such as bar code readers and printers.
		NT Link Communications		I/O memory in the PLC can be allocated and directly linked to various PT functions, including status control areas, status notification areas, touch switches, lamps, memory tables, and other objects.
		Peripheral Bus		Bus for communications with various kinds of Support Software running on a personal computer. High-speed communications are supported.
		Serial Gateway		This gateway enables receiving and automatically converting FINS to the CompoWay/F.
	EtherNet/IP Port			100Base-TX/10Base-T Protocols: TCP/IP, UDP, ARP, ICMP (ping only), BOOTP Applications: FINS, CIP, SNTP, DNS (Client), FTP (Server)
		CIP Communications Service	Tag Data Links	Programless cyclic data exchanges with the devices on the EtherNet/IP network.
			Message Communications	Any CIP commands can be received from the devices on the EtherNet/IP network.
		FINS Communications Service	Message Communications	Any FINS commands can be transferred with the devices on the EtherNet/IP network.
Interrupt	Scheduled Interrupts			Tasks can be executed at a specified interval (minimum of 0.2 ms or 0.1 ms ✻, Unit: 0.1 ms). ✻ When High-speed interrupt function is used.
	Power OFF Interrupts			A task can be executed when CPU Unit's power turns OFF.
	I/O Interrupt Tasks			A task can be executed when an input signal is input to an Interrupt Input Unit.
	External Interrupt Tasks			A task can be executed when interrupts are requested from a Special I/O Unit or a CPU Bus Unit.
	High-speed Interrupt Function			Improves performance for executing interrupt tasks with certain restrictions. (Unit version 1.1 or later.)
Clock	Clock Function			Clock data is stored in memory. Accuracy (Accuracy depends on the temperature.) Ambient temperature of 55°C: –3.5 to +0.5 min error per month Ambient temperature of 25°C: –1.5 to +1.5 min error per month Ambient temperature of 0°C: –3 to +1 min error per month
	Operation Start Time Storage			The time when operating mode was last changed to RUN mode or MONITOR mode is stored.
	Operation Stop Time Storage			The last time a fatal error occurred or the last time the operating mode was changed to PROGRAM mode is stored.
	Startup Time Storage			The time when the power was turned ON is stored.
	Power Interruption Time Storage			The time when the power is turned OFF is stored.
	Total Power ON Time Calculation			The total time that the PLC has been ON is stored in increments of 10 hours.
	Power ON Clock Data Storage			A history of the times when the power was turned ON is stored.
	User Program Overwritten Time Storage			The time that the user program was last overwritten is stored.
	Parameter Date Storage			The time when the Parameter Area was overwritten is stored.
Power Supply Management	Memory Protection			Holding Area data, DM Area data, EM Area data, Counter Completion Flags, and counter present values are held even when power is turned OFF. CIO Area, Work Area, some Auxiliary Area data, and Timer Completion Flags, timer present values, index registers, and data registers can be protected by turning ON the IOM Hold Bit in the Auxiliary Area, and by also setting the IOM Hold Bit to “Hold” in the PLC Setup.
	Power OFF Detection Time Setting			The detection time for power interruptions can be set. AC power supply: 10 to 25 ms (variable) DC power supply: 2 to 5 ms (CJ1W-PD022) or 2 to 20 ms (CJ1W-PD025)
	Power OFF Detection Delay Time			The detection of power interruptions can be delayed: 0 to 10 ms (Not supported by the CJ1W-PD022.)
	Number of Power Interruptions Counter			The number of times power has been interrupted is counted.
Function Blocks				Standard programming can be encapsulated as function blocks.
	Languages in Function Block Definitions			Ladder programming or structured text
Debugging	Online Editing			The program can be changed during operation (in MONITOR or PROGRAM mode), except for block programming areas.
	Force-Set/Reset			Specified bits can be set or reset. Force-set/reset to the EM Area is enabled by specifying a start bank in parameter setting. (unit version 1.2 or higher)
	Differentiate Monitoring			ON/OFF changes in specified bits can be monitored.
	Data Tracing			The specified I/O memory data can be stored in the trace memory in the CPU Unit. The triggers can be set. • The trace data can be uploaded during data tracing using CX-Programmer, which enables continuously logging the data by constantly uploading the trace data (trace data uploading during tracing). • Data tracing can be automatically started when operation is started (i.e., when the operating mode is changed from PROGRAM mode to MONITOR or RUN mode).
	Storing Location of Error when an Error Occurs			The location and task number where execution stopped for a program error is recorded.
	Program Check			The programs can be checked for items such as no END instruction and FALS/FAL errors at startup.

Function				Description
Self-diagnosis and Restoration	Error Log			A function is provided to store predefined error codes in CPU Unit, error information, and time at which the error occurred.
	CPU Error Detection			CPU Unit WDT errors are detected.
	User-defined Failure Diagnosis			Errors can be generated for user-specified conditions: Non-fatal errors (FAL) and fatal errors (FALS). Program section time diagnosis and program section logic diagnosis are supported (FPD instruction).
	Load OFF Function			This function turns OFF all outputs from Output Units when an error occurs.
	RUN Output			The RUN output from the CJ1W-PA205R turns ON while CPU Unit is in RUN mode or MONITOR mode.
	Basic I/O Load Short-circuit Detection			This function provides alarm information from Basic I/O Units that have load short-circuit protection.
	Failure Point Detection			The time and logic of an instruction block can be analyzes using the FPD instruction.
	CPU Standby Detection			This function indicates when the CPU Unit is on standby because all Special I/O Units and CPU Bus Units have not been recognized at the startup in RUN or MONITOR mode.
	Non-fatal Error Detection	System FAL Error Detection (User-defined non-fatal error)		This function generates a non-fatal (FAL) error when the user-defined conditions are met in program.
		Duplicate Refreshing Error Detection		This function detects an error when an immediate refreshing Instruction in an interrupt task is competing with I/O refreshing of a cyclic task.
		Basic I/O Unit Error Detection		This function detects the errors in Basic I/O Units.
		Backup Memory Error Detection		This function detects errors in the memory backup of the user programs and parameter area (backup memory).
		PLC Setup Error Detection		This function detects setting errors in the PLC Setup.
		CPU Bus Unit Error Detection		This function detects an error when there is an error in data exchange between the CPU Unit and a CPU Bus Unit.
		Special I/O Unit Error Detection		This function detects an error when there is an error in data exchange between the CPU Unit and a Special I/O Unit.
		Tag Memory Error Detection		This function detects errors in tag memory.
		Battery Error Detection		This function detects an error when a battery is not connected to the CPU Unit or when the battery voltage drops.
		CPU Bus Unit Setting Error Detection		This function detects an error when the model of a CPU Bus Unit in the registered I/O tables does not agree with the model that is actually mounted in the PLC.
		Special I/O Unit Setting Error Detection		This function detects an error when the model of a Special I/O Unit in the registered I/O tables does not agree with the model of Unit that is actually mounted.
	Fatal Error Detection	Memory Error Detection		This function detects errors that occur in memory of the CPU Unit.
		I/O Bus Error Detection		This function detects when an error occurs in data transfers between the Units mounted in Rack slots and the CPU Unit and detects when the End Cover is not connected to the CPU Rack or an Expansion Rack.
		Unit/Rack Number Duplication Error		This function detects an error when the same unit number is set for two or more Units, the same word is allocated to two or more Basic I/O Units, or the same rack number is set for two or more Racks.
		Too Many I/O Points Error Detection		This function detects an error when the total number of I/O points set in the I/O tables or the number of Units per Rack exceeds the specified range.
		I/O Setting Error Detection		This function detects an error when the number of Units in the registered I/O tables does not agree with the actual number of Units that is mounted, or an Interrupt Unit has been connected in the wrong position, i.e., not in slot 0 to 3.
		Program Error Detection		This function detects errors in programs.
			Instruction Processing Error Detection	This function detects an error when the given data value is invalid when executing an instruction, or execution of instruction between tasks was attempted.
			Indirect DM/EM BCD Error Detection	This function detects an error when an indirect DM/EM address in BCD mode is not BCD.
			Illegal Area Access Error Detection	This function detects an error when an attempt is made to access an illegal area with an instruction operand.
			No END Error Detection	This function detects an error when there is no END instruction at the end of the program.
			Task Error Detection	This function detects an error when there are no tasks that can be executed in a cycle, there is no program for a task, or the execution condition for an interrupt task was met but there is no interrupt task with the specified number.
			Differentiation Overflow Error Detection	This function detects an error when too many differentiated instructions are entered or deleted during online editing (131,072 times or more).
			Invalid Instruction Error Detection	This function detects an error when an attempt is made to execute an instruction that is not defined in the system.
			User Program Area Overflow Error Detection	This function detects an error when instruction data is stored after the last address in user program area.
		Cycle Time Exceeded Error Detection		This function monitors the cycle time (10 to 40,000 ms) and stops the operation when the set value is exceeded.
	Fatal Error Detection (Continued from previous page)	System FALS Error Detection (User-defined Fatal Error)		This function generates a fatal (FALS) error when the user-defined conditions are met in program.
		Version Error Detection		This function detects an error when a user program includes a function that is not supported by the current unit version.
		Memory Card Transfer Error Detection		This function detects an error when the automatic file transfer from Memory Card fails at startup.
	Memory Self-restoration Function			This function performs a parity check on the user program area and self-restoration data.

Function			Description
Maintenance	Simple Backup Function		This function collectively backs up the data in CPU Unit (user programs, parameters, and I/O memory) and internal backup data in the I/O Units.
	Unsolicited Communications		A function that allows the PLC to use Network Communications Instruction to send required FINS commands to a computer connected via a Host Link
	Remote Programming and Monitoring		Host Link communications can be used for remote programming and remote monitoring through a Controller Link, Ethernet, DeviceNet, or SYSMAC LINK Network. Communications across network layers can be performed. Controller Link or Ethernet: 8 layers DeviceNet or SYSMAC LINK: 3 layers
	Automatic Online Connection via Network	Direct Serial Connection	This function enables automatically connecting to the PLC online when the CX-Programmer is directly connected by a serial connection (peripheral (USB) port or serial port).
		Via Networks	This function enables connecting the CX-Programmer online to a PLC that is connected via an EtherNet/IP network.
Security	Read Protection using Password		This function protects reading and displaying programs and tasks using passwords. Write protection: Set using the DIP switch. Read protection: Set a password using the CX-Programmer.
	FINS Write Protection		This function prohibits writing by using FINS commands sent over the network.
	Unit Name Function		This function allows the users to give any names to the Units. Names are verified at online connection to prevent wrong connection
	Hardware ID Using Lot Numbers		This function sets operation protection by identifying hardware using the user programs according to lot numbers stored in the Auxiliary Area.

Unit Versions

Units	Models	Unit version
CJ2H CPU Units	CJ2H-CPU6□-EIP	CPU: Unit version 1.4 EIP: Unit version 2.□ / Unit version 3.□
		CPU: Unit version 1.3 EIP: Unit version 2.0
		CPU: Unit version 1.2 EIP: Unit version 2.0
		CPU: Unit version 1.1 EIP: Unit version 2.0
		CPU: Unit version 1.0 EIP: Unit version 2.0

Function Support by Unit Version

Unit Version 1.4 or Later

CX-Programmer version 9.3 or higher must be used to enable using the functions added for unit version 1.4.

Unit	CJ2H CPU Unit	
Model	CJ2H-CPU6□-EIP	
Item \ Unit version	Unit version 1.4 or higher	Unit version 1.3 or earlier
Synchronous unit operation function Position Control Units with EtherCAT interface CJ1W-NC□82 work for synchronous unit operation.	Supported.	Not supported.

Unit Version 1.3 or Later

CX-Programmer version 9.1 or higher must be used to enable using the functions added for unit version 1.3.

Unit		CJ2H CPU Unit	
Model		CJ2H-CPU6□-EIP	
Item	Unit version	Unit version 1.3 or later	Unit version 1.2 or earlier
Special instructions for certain Special I/O Units	CJ1W-NC281/NC481/NC881 Position Control Units: PCU HIGH-SPEED POSITIONING (NCDMV(218))	Supported.	Not supported.
	CJ1W-NC281/NC481/NC881 Position Control Units: PCU POSITIONING TRIGGER (NCDTR(219))	Supported.	Not supported.
New special instructions	SIGNED AREA RANGE COMPARE: ZCPS(088)	Supported.	Not supported.
	DOUBLE SIGNED AREA RANGE COMPARE: ZCPSL(116)	Supported.	Not supported.

Unit Version 1.2 or Later

CX-Programmer version 8.3 or higher must be used to enable using the functions added for unit version 1.2.

Unit	CJ2H CPU Unit	
Model	CJ2H-CPU6□-EIP	
Item \ Unit version	Unit version 1.2 or higher	Unit version 1.1 or earlier
EM force-set/reset function	Supported.	Not supported.

Note: User programs that use functions of CJ2H CPU Units with unit version 1.2 or later cannot be used with CJ2H CPU Units with unit version 1.1 or earlier. If an attempt is made to transfer a program that uses any of these functions from the CX-Programmer to a CPU Unit with unit version 1.1 or earlier , an error will be displayed and it will not be possible to download to the CPU Unit.

Unit Version 1.1 or Later

CX-Programmer version 8.1 or higher must be used to enable using the functions added for unit version 1.1.

Unit	CJ2H CPU Unit	
Model	CJ2H-CPU6□-EIP	
Item \ Unit version	Unit version 1.1 or higher	Unit version 1.0
High-speed interrupt function Decreased overhead time for interrupt tasks Minimum interval setting of 0.1 ms for Scheduled Interrupt Task	Supported.	Not supported.
Changing the minimum cycle time setting in MONITOR mode	Supported.	Not supported.
Synchronous unit operation function Position Control Units (High-speed type) CJ1W-NC□□4 work for synchronous unit operation.	Supported.	Not supported.
Addition of Immediate refreshing instruction only for specific Special I/O Units and CPU Bus Units For CJ1W-AD042 : Analog Input Direct Convert AIDC (216) For CJ1W-DA042V : Analog Output Direct Convert AODC (217) For CJ1W-SCU22/32/42 : Direct Receive Via Serial Communications Unit DRXDU (261) Direct Transmit Via Serial Communications Unit DTXDU (262)	Supported.	Not supported.

Note: User programs that use functions of CJ2H CPU Units with unit version 1.1 or later cannot be used with CJ2H CPU Units with unit version 1.0. If an attempt is made to transfer a program that uses any of these functions from the CX-Programmer to a CPU Unit with unit version 1.0, an error will be displayed and it will not be possible to download to the CPU Unit. If a program file (extension: .OBJ) that uses any of these functions is transferred to a CPU Unit with unit version 1.0, a program error will occur when operation starts or when the function starts and operation of the CPU Unit will stop.

Unit Versions and Programming Devices

The following tables show the relationship between unit versions and CX-Programmer versions.

Unit Versions and Programming Devices

CPU Unit	Functions		Required Programming Device						
			CX-Programmer						Programming Console
			Ver. 7.1 or lower	Ver.8.0	Ver.8.1/ Ver.8.2	Ver. 8.3	Ver. 9.1/ Ver.9.2	Ver. 9.3 or higher	
CJ2H-CPU6□-EIP Unit version 1.4	Functions added for unit version 1.4	Using new functions	–	–	–	–	–	OK	– ✻3
		Not using new functions	–	OK ✻1	OK ✻1	OK	OK	OK	
CJ2H-CPU6□-EIP Unit version 1.3	Functions added for unit version 1.3	Using new functions	–	–	–	–	OK	OK	
		Not using new functions	–	OK ✻1	OK ✻1	OK	OK	OK	
CJ2H-CPU6□-EIP Unit version 1.2	Functions added for unit version 1.2	Using new functions	–	–	–	OK	OK	OK	
		Not using new functions	–	OK ✻1	OK ✻1	OK	OK	OK	
CJ2H-CPU6□-EIP Unit version 1.1	Functions added for unit version 1.1	Using new functions	–	–	OK ✻2	OK	OK	OK	
		Not using new functions	–	OK ✻1	OK	OK	OK	OK	
CJ2H-CPU6□-EIP Unit version 1.0	Functions for unit version 1.0		–	OK	OK	OK	OK	OK	

✻1. It is not necessary to upgrade the version of the CX-Programmer if functionality that was enhanced for the upgrade of the CPU Unit will not be used.

✻2. CX-Programmer version 8.2 or higher is required to use the added functions in CJ2H CPU Units (CJ2H-CPU6□-EIP) with unit version 1.1. However only High-speed interrupt function and Changing the minimum cycle time setting in MONITOR mode are supported in CX-Programmer version 8.02.

✻3. A Programming Console cannot be used with a CJ2H CPU Unit.

Device Type Setting

The unit version does not affect the setting made for the device type on the CX-Programmer. Select the device type as shown in the following table regardless of the unit version of the CPU Unit.

Series	CPU Unit group	CPU Unit model	Device type setting on CX-Programmer Ver. 8.0 or higher
CJ Series	CJ2H CPU Units	CJ2H-CPU6□-EIP	CJ2H

External Interface

A CJ2H CPU Unit (CJ2H-CPU6□-EIP) provides three communications ports for external interfaces: a peripheral (USB) port, a serial port and an EtherNet/IP port.

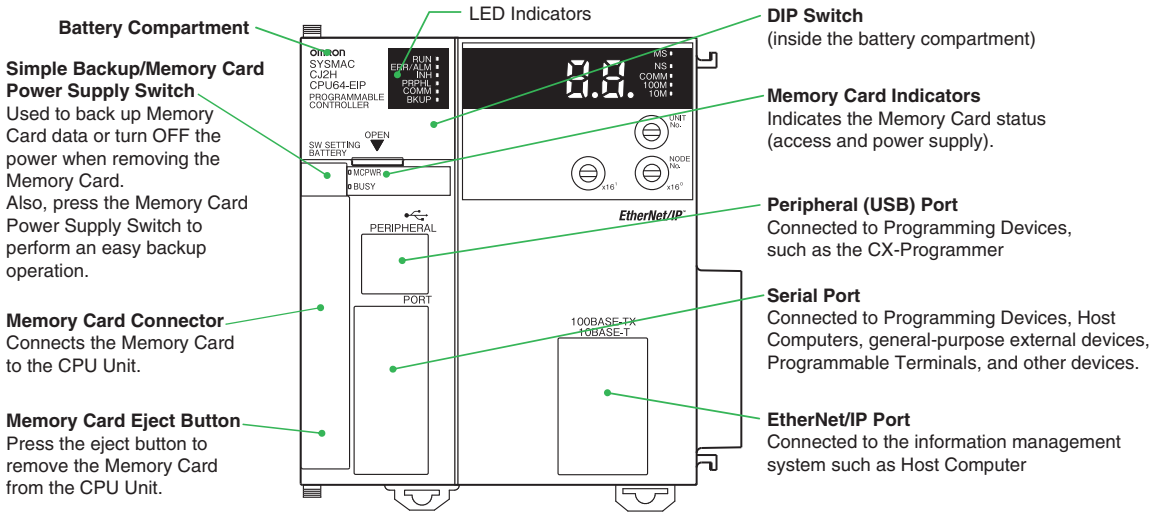

Peripheral (USB) Port

Item	Specification
Baud Rate	12 Mbps max.
Transmission Distance	5 m max.
Interface	USB 2.0-compliant B-type connector
Protocol	Peripheral Bus

Serial Port

Item	Specification
Communications method	Half duplex
Synchronization	Start-stop
Baud rate	0.3/0.6/1.2/2.4/4.8/9.6/19.2/38.4/57.6/115.2 kbps ✻
Transmission distance	15 m max.
Interface	EIA RS-232C
Protocol	Host Link, NT Link, 1:N, No-protocol, or Peripheral Bus

✻ Baud rates for the RS-232C are specified only up to 19.2 kbps. The CJ Series supports serial communications from 38.4 kbps to 115.2 kbps, but some computers cannot support these speeds. Lower the baud rate if necessary.

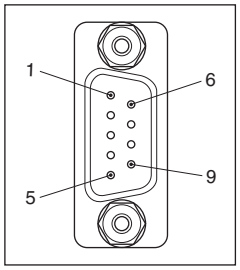

Pin No.	Signal	Name	Direction
1	FG	Protection earth	–
2	SD (TXD)	Send data	Output
3	RD (RXD)	Receive data	Input
4	RS (RTS)	Request to send	Output
5	CS (CTS)	Clear to send	Input
6	5 V	Power supply	–
7	DR (DSR)	Data set ready	Input
8	ER (DTR)	Data terminal ready	Output
9	SG (0 V)	Signal ground	–
Connector hood	FG	Protection earth	–

Note: Do not use the 5-V power from pin 6 of the RS-232C port for anything but CJ1W-CIF11 RS-422A Conversion Adapter, NT-AL001 RS-232C/RS-422A Conversion Adapter and NV3W-M□20L(-V1) Programmable Terminal. The external device or the CPU Unit may be damaged.

EtherNet/IP Port

Item	Specification
Media Access Method	CSMA/CD
Modulation	Baseband
Transmission Paths	Star
Baud Rate	100 Mbps (100Base-TX)
Transmission Media	Shielded twisted-pair (STP) cable; Categories: 5, 5e
Transmission Distance	100 m (between hub and node)
Number of Cascade Connections	No restrictions if switching hub is used.
Communications	CIP Communications (tag data links, Explicit Messages). FINS communications

Dimensions

(Unit: mm)

CJ2H CPU Unit
CJ2H-CPU6□-EIP



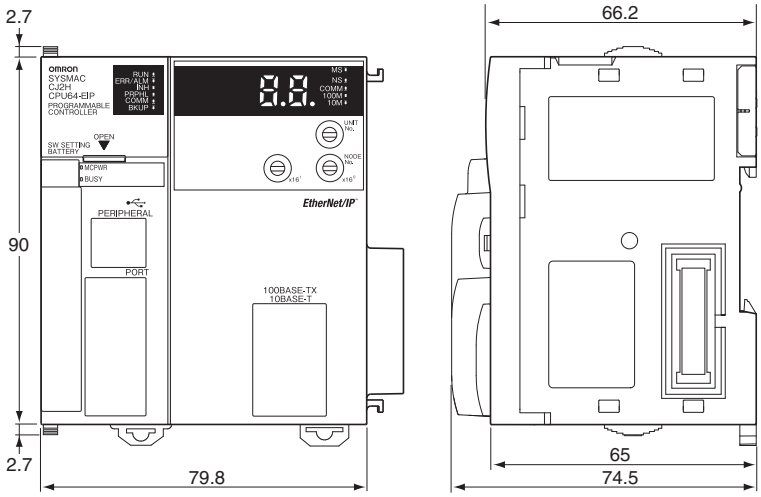

Related Manuals

Cat. No.	Model	Manual	Application	Description
W472	CJ2H-CPU6□-EIP CJ2H-CPU6□ CJ2M-CPU□□	CJ-series CJ2 CPU Unit Hardware User's Manual	Hardware specifications for CJ2 CPU Units	Describes the following for CJ2 CPU Units: • Overview and features • Basic system configuration • Part nomenclature and functions • Mounting and setting procedure • Remedies for errors • Also refer to the *Software User's Manual* (W473).
W473	CJ2H-CPU6□-EIP CJ2H-CPU6□ CJ2M-CPU□□	CJ-series CJ2 CPU Unit Software User's Manual	Software specifications for CJ2 CPU Units	Describes the following for CJ2 CPU Units: • CPU Unit operation • Internal memory • Programming • Settings • Functions built into the CPU Unit Also refer to the *Hardware User's Manual* (W472)
W474	CJ2H-CPU6□-EIP CJ2H-CPU6□ CJ2M-CPU3□ CJ2M-CPU1□ CS1G/H-CPU□□H CS1G/H-CPU□□-V1 CJ1G/H-CPU□□H CJ1G-CPU□□ CJ1M-CPU□□ CS1D-CPU□□HA CS1D-CPU□□SA CS1D-CPU□□H CS1D-CPU□□S NSJ□-□□□□(□)-□□□	CS/CJ/NSJ-series Instructions Reference Manual	Information on instructions	Describes each programming instruction in detail. Also refer to the *Software User's Manual* (W473) when you do programming.
W342	CJ2H-CPU6□-EIP CJ2H-CPU6□ CJ2M-CPU□□ CS1G/H-CPU□□H CS1G/H-CPU□□-V1 CS1D-CPU□□HA CS1D-CPU□□SA CS1D-CPU□□H CS1D-CPU□□S CS1W-SCU□□-V1 CS1W-SCB□□-V1 CJ1H-CPU□□H-R CJ1G/H-CPU□□H CJ1G-CPU□□P CJ1M-CPU□□ CJ1G-CPU□□ CJ1W-SCU□□-V1 CP1H-X□□□□-□ CP1H-XA□□□□-□ CP1H-Y□□□□-□ NSJ□-□□□□(□)-□□□	CS/CJ/CP/NSJ-series Communications Command Reference Manual	Information on communications for CS/CJ/CP-series CPU Units and NSJ-series Controllers	Describes C-mode commands and FINS commands Refer to this manual for a detailed description of commands for communications with the CPU Unit using C mode commands or FINS commands. **Note:** This manual describes the communications commands that are addressed to CPU Units. The communications path that is used is not relevant and can include any of the following: serial ports on CPU Units, communications ports on Serial Communications Units/Boards, and Communications Units. For communications commands addressed to Special I/O Units or CPU Bus Units, refer to the operation manual for the related Unit.
W463	CXONE-AL□□D-V□	CX-One Setup Manual	Installing software from the CX-One	Provides an overview of the CX-One FA Integrated Tool Package and describes the installation procedure.
W446	WS02-CXPC□-V□	CX-Programmer Operation Manual	Support Software for Windows computers CX-Programmer operating procedure	Describes operating procedures for the CX-Programmer. Also refer to the *Software User's Manual* (W473) and *Instructions Reference Manual* (W474) when you do programming.
W447		CX-Programmer Operation Manual Functions Blocks/ Structured Text		
W469		CX-Programmer Operation Manual SFC Programming		
W366	WS02-SIMC1-E	CS/CJ/CP/NSJ-series CX-Simulator Operation Manual	Operating procedures for CX-Simulator Simulation Support Software for Windows computers Using simulation in the CX-Programmer with CX-Programmer version 6.1 or higher	Describes the operating procedures for the CX-Simulator. When you do simulation, also refer to the *CX-Programmer Operation Manual* (W446), *Software User's Manual* (W473), and *CS/CJ/NSJ series Instructions Reference Manual* (W474).
W464	CXONE-AL□□D-V□	CS/CJ/CP/NSJ-series CX-Integrator Network Configuration Software Operation Manual	Network setup and monitoring	Describes the operating procedures for the CX-Integrator.

Terms and Conditions Agreement

Read and understand this catalog.
Please read and understand this catalog before purchasing the products. Please consult your OMRON representative if you have any questions or comments.

Warranties.
(a) Exclusive Warranty. Omron's exclusive warranty is that the Products will be free from defects in materials and workmanship for a period of twelve months from the date of sale by Omron (or such other period expressed in writing by Omron). Omron disclaims all other warranties, express or implied.
(b) Limitations. OMRON MAKES NO WARRANTY OR REPRESENTATION, EXPRESS OR IMPLIED, ABOUT NON-INFRINGEMENT, MERCHANTABILITY OR FITNESS FOR A PARTICULAR PURPOSE OF THE PRODUCTS. BUYER ACKNOWLEDGES THAT IT ALONE HAS DETERMINED THAT THE
PRODUCTS WILL SUITABLY MEET THE REQUIREMENTS OF THEIR INTENDED USE.
Omron further disclaims all warranties and responsibility of any type for claims or expenses based on infringement by the Products or otherwise of any intellectual property right. (c) Buyer Remedy. Omron's sole obligation hereunder shall be, at Omron's election, to (i) replace (in the form originally shipped with Buyer responsible for labor charges for removal or replacement thereof) the non-complying Product, (ii) repair the non-complying Product, or (iii) repay or credit Buyer an amount equal to the purchase price of the non-complying Product; provided that in no event shall Omron be responsible for warranty, repair, indemnity or any other claims or expenses regarding the Products unless Omron's analysis confirms that the Products were properly handled, stored, installed and maintained and not subject to contamination, abuse, misuse or inappropriate modification. Return of any Products by Buyer must be approved in writing by Omron before shipment. Omron Companies shall not be liable for the suitability or unsuitability or the results from the use of Products in combination with any electrical or electronic components, circuits, system assemblies or any other materials or substances or environments. Any advice, recommendations or information given orally or in writing, are not to be construed as an amendment or addition to the above warranty.
See http://www.omron.com/global/ or contact your Omron representative for published information.

Limitation on Liability; Etc.
OMRON COMPANIES SHALL NOT BE LIABLE FOR SPECIAL, INDIRECT, INCIDENTAL, OR CONSEQUENTIAL DAMAGES, LOSS OF PROFITS OR PRODUCTION OR COMMERCIAL LOSS IN ANY WAY CONNECTED WITH THE PRODUCTS, WHETHER SUCH CLAIM IS BASED IN CONTRACT, WARRANTY, NEGLIGENCE OR STRICT LIABILITY.
Further, in no event shall liability of Omron Companies exceed the individual price of the Product on which liability is asserted.

Suitability of Use.
Omron Companies shall not be responsible for conformity with any standards, codes or regulations which apply to the combination of the Product in the Buyer's application or use of the Product. At Buyer's request, Omron will provide applicable third party certification documents identifying ratings and limitations of use which apply to the Product. This information by itself is not sufficient for a complete determination of the suitability of the Product in combination with the end product, machine, system, or other application or use. Buyer shall be solely responsible for determining appropriateness of the particular Product with respect to Buyer's application, product or system. Buyer shall take application responsibility in all cases.
NEVER USE THE PRODUCT FOR AN APPLICATION INVOLVING SERIOUS RISK TO LIFE OR PROPERTY OR IN LARGE QUANTITIES WITHOUT ENSURING THAT THE SYSTEM AS A WHOLE HAS BEEN DESIGNED TO ADDRESS THE RISKS, AND THAT THE OMRON PRODUCT(S) IS PROPERLY RATED AND INSTALLED FOR THE INTENDED USE WITHIN THE OVERALL EQUIPMENT OR SYSTEM.

Programmable Products.
Omron Companies shall not be responsible for the user's programming of a programmable Product, or any consequence thereof.

Performance Data.
Data presented in Omron Company websites, catalogs and other materials is provided as a guide for the user in determining suitability and does not constitute a warranty. It may represent the result of Omron's test conditions, and the user must correlate it to actual application requirements. Actual performance is subject to the Omron's Warranty and Limitations of Liability.

Change in Specifications.
Product specifications and accessories may be changed at any time based on improvements and other reasons. It is our practice to change part numbers when published ratings or features are changed, or when significant construction changes are made. However, some specifications of the Product may be changed without any notice. When in doubt, special part numbers may be assigned to fix or establish key specifications for your application. Please consult with your Omron's representative at any time to confirm actual specifications of purchased Product.

Errors and Omissions.
Information presented by Omron Companies has been checked and is believed to be accurate; however, no responsibility is assumed for clerical, typographical or proofreading errors or omissions.

2024.9

In the interest of product improvement, specifications are subject to change without notice.

OMRON Corporation
Industrial Automation Company

http://www.ia.omron.com/

(c)Copyright OMRON Corporation 2024 All Right Reserved.