CJ-series Input Units

CJ1W-ID/IA

CSM_CJ1W-ID_IA_DS_E_11_13

A Wide Range of Basic Input Units for High Speed Input and Different Applications

- Receive ON/OFF signals from external devices into the PLC System to update I/O memory in the CPU Unit.
- New high-speed input models CJ1W-ID212 and CJ1W-ID233 are now available. These units can help to increase system throughput.



CJ1W-ID212



CJ1W-ID233

Features

- High-speed input models are available, meeting versatile applications.
  ON Response Time: 15µs, OFF Response Time: 90µs
- Use 24-VDC, 100-VAC, and 200-VAC models to connect to devices with different types of outputs.
- The 24-VDC models can be connected to devices with either NPN or PNP outputs. There is no need to select the polarity. *1
- A digital filter in the Unit can be set from 0 to 32 ms to reduce the influence of external noise.
- Either a Fujitsu / OTAX or MIL connector interface can be used. *2
- Several models of Terminal Block Conversion Units are available, making it easy to connect to external devices.

*1. The same polarity is used for the same common.
*2. For models with 32 or 64 inputs.

Ordering Information

International Standards

- The standards are abbreviated as follows: U: UL, U1: UL (Class I Division 2 Products for Hazardous Locations), C: CSA, UC: cULus, UC1: cULus (Class I Division 2 Products for Hazardous Locations), CU: cUL, N: NK, L: Lloyd, and CE: EC Directives.
- Contact your OMRON representative for further details and applicable conditions for these standards.

Input Units

Unit type	Product name	Specifications					Current consumption (A)		Model	Standards
		I/O points	Input voltage and current	Commons	External connection	No. of words allocated	5 V	24 V		
CJ1 Basic I/O Units	DC Input Units 	8 inputs	12 to 24 VDC, 10 mA	Independent contacts	Removable terminal block	1 word	0.09	–	**CJ1W-ID201**	UC1, N, L, CE
		16 inputs	24 VDC, 7 mA	16 points, 1 common	Removable terminal block	1 word	0.08	–	**CJ1W-ID211**	
		16 inputs (High speed)	24 VDC, 7 mA	16 points, 1 common	Removable terminal block	1 word	0.13	–	**CJ1W-ID212**	N, L, CE
		32 inputs	24 VDC, 4.1 mA	16 points, 1 common	Fujitsu / OTAX connector	2 words	0.09	–	**CJ1W-ID231**	UC1, N, L, CE
		32 inputs	24 VDC, 4.1 mA	16 points, 1 common	MIL connector	2 words	0.09	–	**CJ1W-ID232**	
		32 inputs (High speed)	24 VDC, 4.1 mA	16 points, 1 common	MIL connector	2 words	0.20	–	**CJ1W-ID233**	N, L, CE
		64 inputs	24 VDC, 4.1 mA	16 points, 1 common	Fujitsu / OTAX connector	4 words	0.09	–	**CJ1W-ID261**	UC1, N, L, CE
		64 inputs	24 VDC, 4.1 mA	16 points, 1 common	MIL connector	4 words	0.09	–	**CJ1W-ID262**	
	AC Input Units 	8 inputs	200 to 24 VAC, 10 mA (200 V, 50 Hz)	8 points, 1 common	Removable Terminal Block	1 words	0.08	–	**CJ1W-IA201**	
		16 inputs	100 to 120 VAC, 7 mA (100 V, 50 Hz)	16 points, 1 common	Removable Terminal Block	1 words	0.09	–	**CJ1W-IA111**	

Accessories

Connectors are not included for models with connectors. Either use one of the applicable connector listed below or use an applicable Connector-Terminal Block Conversion Unit or I/O Relay Terminal. For details on wiring methods, refer to *External Interface*.

Applicable Connectors

Fujitsu / OTAX Connectors for 32-input, 32-output, 64-input, 64-output, 32-input/32-output, and 16-input/16-output Units

Name	Connection	Remarks	Applicable Units	Model	Standards
40-pin Connectors	Soldered	Connector Fujitsu FCN-361J040-AU Connector Cover Fujitsu FCN-360C040-J2 OTAX N360C040J2	Fujitsu / OTAX Connectors: CJ1W-ID231(32 inputs): 1 per Unit CJ1W-ID261 (64 inputs): 2 per Unit CJ1W-OD231 (32 outputs):1 per Unit CJ1W-OD261 (64 outputs): 2 per Unit CJ1W-MD261 (32 inputs, 32 outputs): 2 per Unit	C500-CE404	–
	Crimped	Housing Fujitsu FCN-363J040 OTAX N363J040 Contactor Fujitsu FCN-363J-AU OTAX N363JAU Connector Cover Fujitsu FCN-360C040-J2 OTAX N360C040J2		C500-CE405	
	Pressure welded	Fujitsu FCN-367J040-AU/F		C500-CE403	
24-pin Connectors	Soldered	Connector Fujitsu FCN-361J024-AU Connector Cover Fujitsu FCN-360C024-J2 OTAX N360C024J2	Fujitsu / OTAX Connectors: CJ1W-MD231 (16 inputs, 16 outputs): 2 per Unit	C500-CE241	
	Pressure welded	Fujitsu FCN-367J024-AU/F OTAX N367J024AUF		C500-CE243	

MIL Connectors for 32-input, 32-output, 64-input, 64-output, 32-input/32-output, and 16-input/16-output Units

Name	Connection	Remarks	Applicable Units	Model	Standards
40-pin Connectors	Pressure welded	FRC5-AO40-3TOS	MIL Connectors: CJ1W-ID232/233 (32 inputs): 1 per Unit CJ1W-OD232/233/234 (32 outputs):1 per Unit CJ1W-ID262 (64 inputs): 2 per Unit CJ1W-OD262/263 (64 outputs): 2 per Unit CJ1W-MD263/563 (32 inputs, 32 outputs): 2 per Unit	XG4M-4030-T	–
	Crimped	–		XG5N-401*	
20-pin Connectors	Pressure welded	FRC5-AO20-3TOS	MIL Connectors: CJ1W-MD232/233 (16 inputs, 16 outputs): 2 per Unit	XG4M-2030-T	–
	Crimped	–		XG5N-201*	

* Crimp Contacts are also required. Refer to page 20 for details.

Applicable Connector-Terminal Block Conversion Units

Type	Series	Number of connector poles	Number of terminal block poles	Wiring method	Terminal type	Size			Mounting		Common terminals	I/O Units	Model *	Standards
						Depth (mm)	Height (mm)	Width (mm)	DIN Track	Screws				
PLCs	XW2K	40	36	Push-In Plus 	Spring	75	39	40.8	Yes	–	No	CJ1W-ID231 CJ1W-ID261	XW2K-40G-O32A	–
												CJ1W-ID232 CJ1W-ID233 CJ1W-ID262	XW2K-40G-O32C	
		40	102	Push-In Plus 	Spring	124	52.7	40.8			Yes	CJ1W-ID231 CJ1W-ID261	XW2K-40G-O32A-IN	
												CJ1W-ID232 CJ1W-ID233 CJ1W-ID262	XW2K-40G-O32C-IN	
	XW2R	40	34	Phillips screw 	M3	130.7	50	48.05			No	CJ1W-ID231 CJ1W-ID261	XW2R-J34GD-C1	
												CJ1W-ID232 CJ1W-ID233 CJ1W-ID262	XW2R-J34GD-C2	
		40	34	Slotted screw (rise up) 	M3 (European type)	98.5	50	44.81			No	CJ1W-ID231 CJ1W-ID261	XW2R-E34GD-C1	
												CJ1W-ID232 CJ1W-ID233 CJ1W-ID262	XW2R-E34GD-C2	

Note: For the combination of I/O Units with Connector-Terminal Block Conversion Units, refer to *2. Connecting Connector-Terminal Block Conversion Units*.

* Representative models only. For details, refer to the XW2K series Datasheet (Cat. No. G152) and XW2R Datasheet.

Connecting Cables for Connector-Terminal Block Conversion Units

Appearance	Connectors	Cable lenght [m]	Model
XW2Z-□□□B 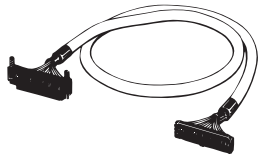	One 40-pin FCN Connector to One 40-pin MIL Connector	0.5	XW2Z-050B
		1	XW2Z-100B
		1.5	XW2Z-150B
		2	XW2Z-200B
		3	XW2Z-300B
		5	XW2Z-500B
XW2Z-□□□K 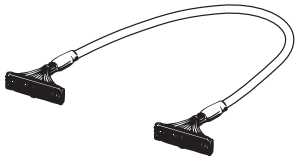	One 40-pin MIL Connector to One 40-pin MIL Connector	0.5	XW2Z-C50K
		1	XW2Z-100K
		1.5	XW2Z-150K
		2	XW2Z-200K
		3	XW2Z-300K
		5	XW2Z-500K

Applicable I/O Relay Terminals

Type	Series	Specifications						Size (horizontal mounting)			Mounting		Model	Standards
		Classification		Polarity	Number of points	Rated ON current at contacts	Rated voltage	Horizontal (mm)	Vertical (mm)	Height (mm)	DIN Track	Screws		
Push-In Plus terminal block	G70V 	Inputs	DC inputs	NPN	16 (SPSTNO × 16)	50 mA	24 VDC	143	90	56	Yes	Yes	**G70V-SID16P *4**	UC, CE (TÜV certified)
				PNP									**G70V-SID16P-1 *4**	
				NPN									**G70V-SID16P-C16 *5**	
				PNP									**G70V-SID16P-1-C16 *5**	
		Outputs	Relay outputs	NPN	16 (SPDT × 16)	6 A/point, 10 A/ common							**G70V-SOC16P *4**	
				PNP									**G70V-SOC16P-1 *4**	
				NPN									**G70V-SOC16P-C4 *6**	
				PNP									**G70V-SOC16P-1-C4 *6**	
Standard	G7TC 	Inputs	AC inputs	NPN	16 (SPSTNO × 16)	1A	100/(110) VAC	182	85	68	Yes	No	**G7TC-IA16 AC100/110**	U, C
							200/(220) VAC						**G7TC-IA16 AC200/220**	
			DC inputs				12 VDC						**G7TC-ID16 DC12**	
							24 VDC						**G7TC-ID16 DC24**	
							100/110 VDC						**G7TC-ID16 DC100/110**	
		Outputs	Relay outputs	NPN	8 (SPSTNO × 8)	5A	12 VDC	102					**G7TC-OC08 DC12**	
							24 VDC						**G7TC-OC08 DC24**	
					16 (SPSTNO × 16)		12 VDC	182					**G7TC-OC16 DC12**	
							24 VDC						**G7TC-OC16 DC24**	
				PNP	16 (SPSTNO × 16)		12 VDC						**G7TC-OC16-1 DC12**	
							24 VDC						**G7TC-OC16-1 DC24**	
High-capacity socket	G70A *1 (Socket only) 	Inputs	Relay inputs	NPN/ PNP	16 (SPDT × 16 possible with G2R Relays)	100 mA	110 VDC max., 240 VAC max. *2	234	75	64	Yes	No	**G70A-ZOC16-5**	U, C, CE (VDE certified)
		Outputs	Relay outputs	NPN		10 A (Terminal block allowable	24 VDC						**G70A-ZOC16-3**	
				PNP									**G70A-ZOC16-4**	
Space-saving	Vertical type G70D-V 	Outputs	Relay outputs	NPN	16 (SPSTNO × 16)	5 A or 3 A *3	24 VDC	135	46	81	Yes	Yes	**G70D-VSOC16**	U, C, CE (VDE certified)
			MOSFET relay outputs			0.3 A							**G70D-VFOM16**	
	Flat type G70D 		Relay outputs	NPN	8 (SPSTNO × 8)	5 A		68	93	44	Yes	Yes	**G70D-SOC08**	–
					16 (SPSTNO × 16)	3 A		156	51	39			**G70D-SOC16**	
				PNP	16 (SPSTNO × 16)	3 A							**G70D-SOC16-1**	
			MOSFET relay outputs	NPN	16 (SPSTNO × 16)	0.3 A							**G70D-FOM16**	
				PNP									**G70D-FOM16-1 *7**	
High-capacity, space-saving	G70R 	Outputs	Relay outputs	NPN	8 (SPSTNO × 8)	10 A	24 VDC	136	93	55	Yes	Yes	**G70R-SOC08 *7**	–

*1. G70A is a I/O terminal socket product. Relay is not provided with the socket. Be sure to order a relay, timer separately.
*2. Each relay to be mounted must incorporate a coil that has proper specifications within the maximum rated voltage range.
*3. Eight or fewer points ON: 5 A, Nine or more points ON: 3 A.
*4. Internal common at terminal block: No internal connections
*5. Internal common at terminal block: Internal IO common 16 points internally connected
*6. Internal common at terminal block: Every 4 points internally connected at terminal block middle row.
*7. Product no longer available to order.

Note: 1. For the combination of Input Units with I/O Relay Terminal and Connecting Cables, refer to *3. Connecting I/O Relay Terminals*.
2. Please refer to each Datasheet about details.
3. When the G7TC is used with an AC rated voltage, three rated currents can be used. If a coil voltage of 110 or 220 VAC is used, 50 Hz cannot be used.

Cables for I/O Relay Terminals

Type	Name	I/O Classification	Appearance	Cable length L (mm)		Models
Fujitsu/OTAX connectors (24 pins)	Cables with Connectors (1:1) XW2Z-R□C	16 I/O points	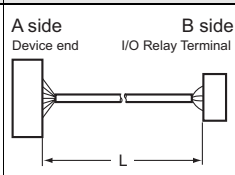	1,000		**XW2Z-R100C**
				1,500		**XW2Z-R150C**
				2,000		**XW2Z-R200C**
				3,000		**XW2Z-R300C**
				5,000		**XW2Z-R500C**
Fujitsu/OTAX connectors (40 pins)	Cables with Connectors (1:2) XW2Z-RI□C-□ XW2Z-RO□C-□	32 input points	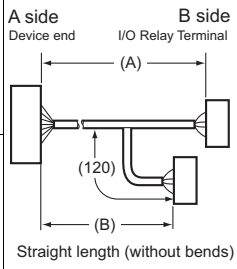	(A) 1,000	(B) 750	**XW2Z-RI100C-75**
				(A) 1,500	(B) 1,250	**XW2Z-RI150C-125**
				(A) 2,000	(B) 1,750	**XW2Z-RI200C-175**
				(A) 3,000	(B) 2,750	**XW2Z-RI300C-275**
				(A) 5,000	(B) 4,750	**XW2Z-RI500C-475**
		32 output points		(A) 1,000	(B) 750	**XW2Z-RO100C-75**
				(A) 1,500	(B) 1,250	**XW2Z-RO150C-125**
				(A) 2,000	(B) 1,750	**XW2Z-RO200C-175**
				(A) 3,000	(B) 2,750	**XW2Z-RO300C-275**
				(A) 5,000	(B) 4,750	**XW2Z-RO500C-475**
MIL connectors (20 pins)	Cables with Connectors (1:1) XW2Z-RI□C XW2Z-RO□C	16 I/O points	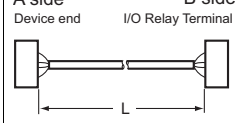	250		**XW2Z-RI25C**
				500		**XW2Z-RI50C**
				250		**XW2Z-RO25C**
				500		**XW2Z-RO50C**
MIL connectors (40 pins)	Cables with Connectors (1:2) XW2Z-RO□-□-D1, XW2Z-RI□-□-D1	32 I/O points	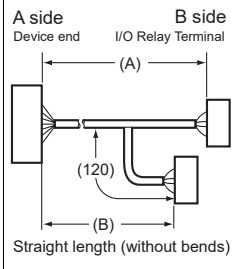	(A) 500	(B) 250	**XW2Z-RO50-25-D1**
				(A) 750	(B) 500	**XW2Z-RO75-50-D1**
				(A) 1,000	(B) 750	**XW2Z-RO100-75-D1**
				(A) 1,500	(B) 1,250	**XW2Z-RO150-125-D1**
				(A) 2,000	(B) 1,750	**XW2Z-RO200-175-D1**
				(A) 3,000	(B) 2,750	**XW2Z-RO300-275-D1**
				(A) 5,000	(B) 4,750	**XW2Z-RO500-475-D1**
				(A) 500	(B) 250	**XW2Z-RI50-25-D1**
				(A) 750	(B) 500	**XW2Z-RI75-50-D1**
				(A) 1,000	(B) 750	**XW2Z-RI100-75-D1**
				(A) 1,500	(B) 1,250	**XW2Z-RI150-125-D1**
				(A) 2,000	(B) 1,750	**XW2Z-RI200-175-D1**
				(A) 3,000	(B) 2,750	**XW2Z-RI300-275-D1**
				(A) 5,000	(B) 4,750	**XW2Z-RI500-475-D1**

Note: Refer to the Datasheet for the XW2Z-R Cables for I/O Relay Terminals (Cat. No. G126).

Mountable Racks

Model	NJ system		CJ system (CJ1, CJ2)		CP1H system	NSJ system *	
	CPU Rack	Expansion Rack	CPU Rack	Expansion Backplane	CP1H PLC	NSJ Controller	Expansion Backplane
CJ1W-ID201	10 Units	10 Units (per Expansion Rack)	10 Units	10 Units (per Expansion Backplane)	Not supported	Not supported	10 Units (per Expansion Backplane)
CJ1W-ID211							
CJ1W-ID212							
CJ1W-ID231							
CJ1W-ID232							
CJ1W-ID233							
CJ1W-ID261							
CJ1W-ID262							
CJ1W-IA201							
CJ1W-IA111							

* Product no longer available to order.

Specifications

CJ1W-ID201 DC Input Unit (12 to 24-VDC, 8 Points)

Name	8-point DC Input Unit with Terminal Block
Model	CJ1W-ID201
Rated Input Voltage	12 to 24 VDC
Rated Input Voltage Range	10.2 to 26.4 VDC
Input Impedance	2.4 kΩ
Input Current	10 mA typical (at 24 VDC)
ON Voltage/ON Current	8.8 VDC min./3 mA min.
OFF Voltage/OFF Current	3 VDC max./1 mA max.
ON Response Time	8.0 ms max. (Can be set to between 0 and 32 ms in the Setup.) *1
OFF Response Time	8.0 ms max. (Can be set to between 0 and 32 ms in the Setup.) *1
Number of Circuits	8 independent circuits
Number of Simultaneously ON Points	100% simultaneously ON
Insulation Resistance	20 MΩ min. between external terminals and the GR terminal (100 VDC)
Dielectric Strength	1,000 VAC between the external terminals and the GR terminal for 1 minute at a leakage current of 10 mA max.
Internal Current Consumption	80 mA max.
Weight	110 g max.
Circuit Configuration	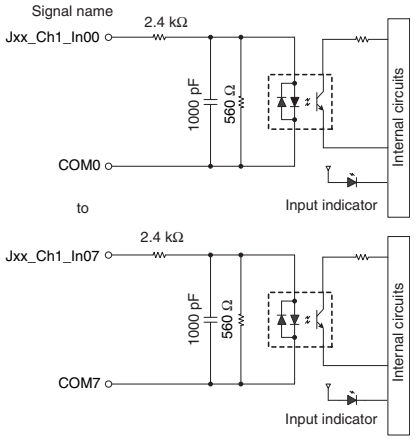 • The signal names of the terminals are the device variable names. The device variable names are the names that use "Jxx" as the device name.
External connection and terminal-device variable diagram	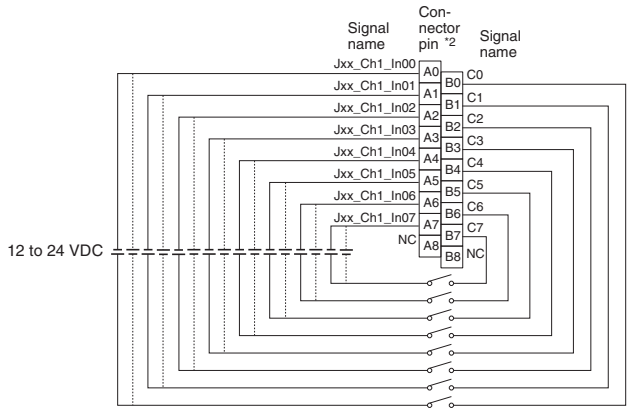 • Polarity of the input power supply can be connected in either direction. • The signal names of the terminals are the device variable names. The device variable names are the names that use "Jxx" as the device name.

*1. The ON response time will be 20 μs maximum and OFF response time will be 400 μs maximum even if the response time are set to 0 ms due to internal element delays.

*2. Terminal numbers A0 to A8 and B0 to B8 are used in the external connection and terminal-device variable diagrams. They are not printed on the Units.

Note: Although 16 I/O bits (1 word) are allocated, only 8 of these can be used for external I/O.

CJ1W-ID211 DC Input Unit (24 VDC, 16 Points)

Name	16-point DC Input Unit with Terminal Block
Model	CJ1W-ID211
Rated Input Voltage	24 VDC
Rated Input Voltage Range	20.4 to 26.4 VDC
Input Impedance	3.3 kΩ
Input Current	7 mA typical (at 24 VDC)
ON Voltage/ON Current	14.4 VDC min./3 mA min.
OFF Voltage/OFF Current	5 VDC max./1 mA max.
ON Response Time	8.0 ms max. (Can be set to between 0 and 32 ms in the Setup.) *1
OFF Response Time	8.0 ms max. (Can be set to between 0 and 32 ms in the Setup.) *1
Number of Circuits	16 (16 points/common, 1 circuit)
Number of Simultaneously ON Points	100% simultaneously ON (at 24 VDC) (Refer to the following illustration.)
Insulation Resistance	20 MΩ min. between external terminals and the GR terminal (100 VDC)
Dielectric Strength	1,000 VAC between the external terminals and the GR terminal for 1 minute at a leakage current of 10 mA max.
Internal Current Consumption	80 mA max.
Weight	110 g max.

Circuit Configuration

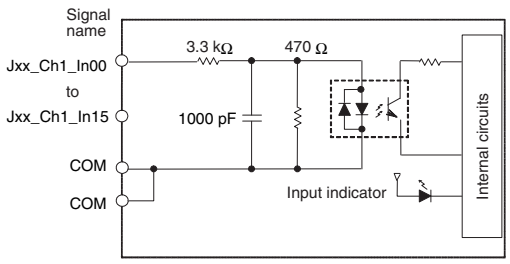

- The signal names of the terminals are the device variable names.
  The device variable names are the names that use "Jxx" as the device name.

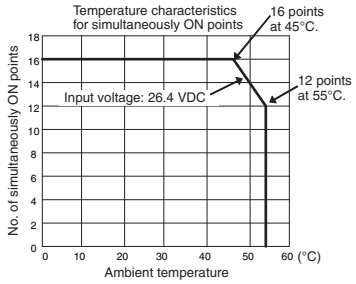

External connection and terminal-device variable diagram

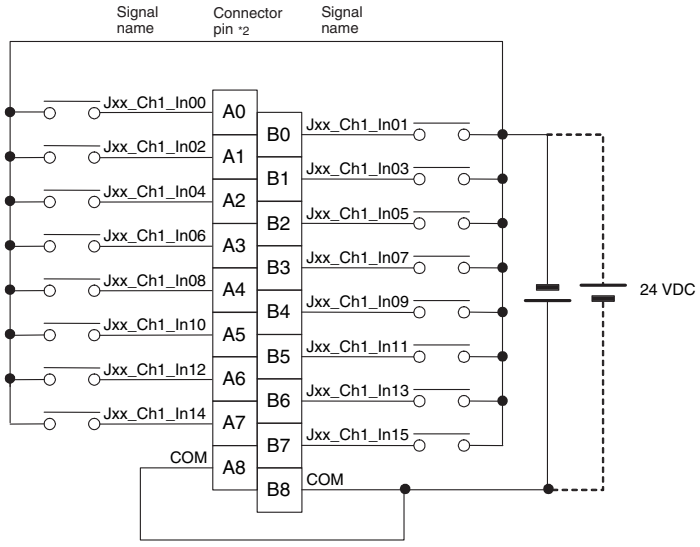

- Polarity of the input power supply can be connected in either direction.
- The signal names of the terminals are the device variable names.
  The device variable names are the names that use "Jxx" as the device name.

*1. The ON response time will be 20 μs maximum and OFF response time will be 400 μs maximum even if the response time are set to 0 ms due to internal element delays.

*2. Terminal numbers A0 to A8 and B0 to B8 are used in the external connection and terminal-device variable diagrams. They are not printed on the Units.

CJ1W-ID212 DC Input Unit (24 VDC, 16 Points)

Name	16-point DC Input Unit with Terminal Block
Model	CJ1W-ID212
Rated Input Voltage	24 VDC
Rated Input Voltage Range	20.4 to 26.4 VDC
Input Impedance	3.3 kΩ
Input Current	7 mA typical (at 24 VDC)
ON Voltage/ON Current	14.4 VDC min./3 mA min.
OFF Voltage/OFF Current	5 VDC max./1 mA max.
ON Response Time	8.0 ms max. (Can be set to between 0 and 32 ms in the Setup.) *1
OFF Response Time	8.0 ms max. (Can be set to between 0 and 32 ms in the Setup.) *1
Number of Circuits	16 (16 points/common, 1 circuit)
Number of Simultaneously ON Points	100% simultaneously ON (at 24 VDC) (Refer to the following illustration.)
Insulation Resistance	20 MΩ min. between external terminals and the GR terminal (100 VDC)
Dielectric Strength	1,000 VAC between the external terminals and the GR terminal for 1 minute at a leakage current of 10 mA max.
Internal Current Consumption	130 mA max.
Weight	110 g max.

Circuit Configuration

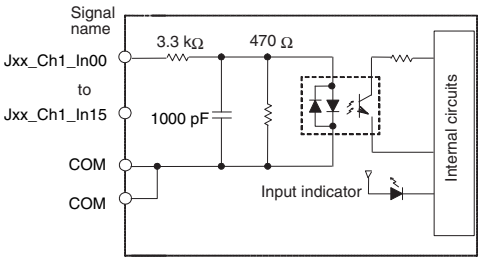

- The signal names of the terminals are the device variable names. The device variable names are the names that use "Jxx" as the device name.

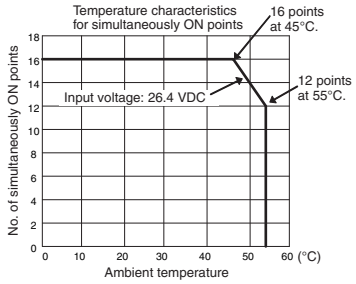

External connection and terminal-device variable diagram

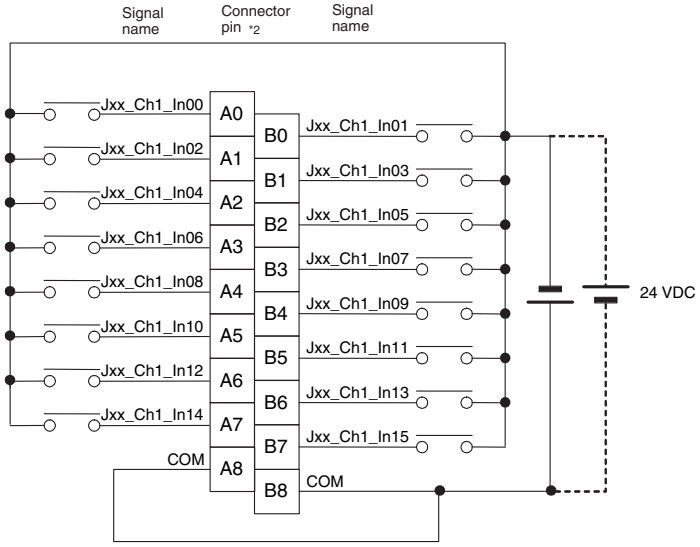

- Polarity of the input power supply can be connected in either direction.
- The signal names of the terminals are the device variable names. The device variable names are the names that use "Jxx" as the device name.

*1. The ON response time will be 15 μs maximum and OFF response time will be 90 μs maximum even if the response time are set to 0 ms due to internal element delays.

*2. Terminal numbers A0 to A8 and B0 to B8 are used in the external connection and terminal-device variable diagrams. They are not printed on the Units.

CJ1W-ID231 DC Input Unit (24 VDC, 32 Points)

Name	32-point DC Input Unit with Fujitsu / OTAX Connector
Model	CJ1W-ID231
Rated Input Voltage	24 VDC
Rated Input Voltage Range	20.4 to 26.4 VDC
Input Impedance	5.6 kΩ
Input Current	4.1 mA typical (at 24 VDC)
ON Voltage/ON Current	19.0 VDC min./3 mA min.
OFF Voltage/OFF Current	5 VDC max./1 mA max.
ON Response Time	8.0 ms max. (Can be set to between 0 and 32 in the Setup.) *
OFF Response Time	8.0 ms max. (Can be set to between 0 and 32 in the Setup.) *
Number of Circuits	32 (16 points/common, 2 circuits)
Number of Simultaneously ON Points	75% (12 points/common) simultaneously ON (at 24 VDC) (Refer to the following illustration.)
Insulation Resistance	20 MΩ min. between external terminals and the GR terminal (100 VDC)
Dielectric Strength	1,000 VAC between the external terminals and the GR terminal for 1 minute at a leakage current of 10 mA max.
Internal Current Consumption	90 mA max.
Weight	70 g max.
Accessories	None

Circuit Configuration

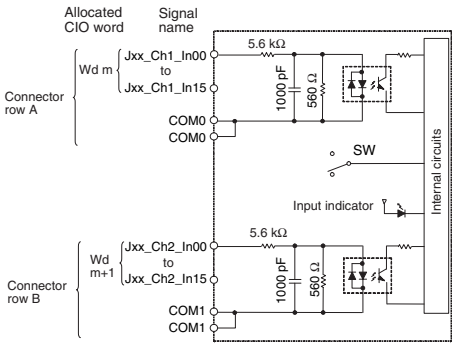

- The signal names of the terminals are the device variable names. The device variable names are the names that use "Jxx" as the device name.

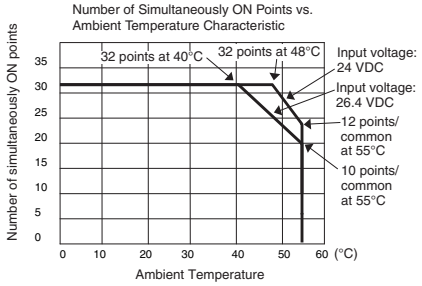

External connection and terminal-device variable diagram

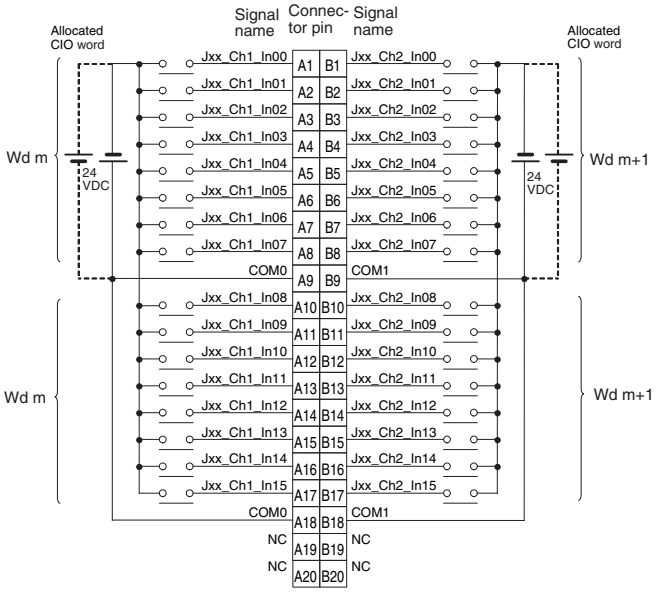

- The input power polarity can be connected in either direction.
- Be sure to wire both pins A9 and A18 (COM0), and set the same polarity for both pins.
- Be sure to wire both pins B9 and B18 (COM1), and set the same polarity for both pins.
- The signal names of the terminals are the device variable names. The device variable names are the names that use "Jxx" as the device name.

* The ON response time will be 20 μs maximum and OFF response time will be 400 μs maximum even if the response times are set to 0 ms due to internal element delays.

Note: Observe the following restrictions when connecting to a 2-wire sensor.

- Make sure the input power supply voltage is larger than the ON voltage (19 V) plus the residual voltage of the sensor (approx. 3 V).
- Use a sensor with a minimum load current of 3 mA min.
- Connect bleeder resistance if you connect a sensor with a minimum load current of 5 mA or higher.

CJ1W-ID232 DC Input Unit (24 VDC, 32 Points)

Name	32-point DC Input Unit with MIL Connector
Model	CJ1W-ID232
Rated Input Voltage	24 VDC
Rated Input Voltage Range	20.4 to 26.4 VDC
Input Impedance	5.6 kΩ
Input Current	4.1 mA typical (at 24 VDC)
ON Voltage/ON Current	19.0 VDC min./3 mA min.
OFF Voltage/OFF Current	5 VDC max./1 mA max.
ON Response Time	8.0 ms max. (Can be set to between 0 and 32 in the Setup.) *
OFF Response Time	8.0 ms max. (Can be set to between 0 and 32 in the Setup.) *
Number of Circuits	32 (16 points/common, 2 circuits)
Number of Simultaneously ON Points	75% (12 points/common) simultaneously ON (at 24 VDC) (Refer to the following illustration.)
Insulation Resistance	20 MΩ min. between external terminals and the GR terminal (100 VDC)
Dielectric Strength	1,000 VAC between the external terminals and the GR terminal for 1 minute at a leakage current of 10 mA max.
Internal Current Consumption	90 mA max.
Weight	70 g max.
Accessories	None

Circuit Configuration

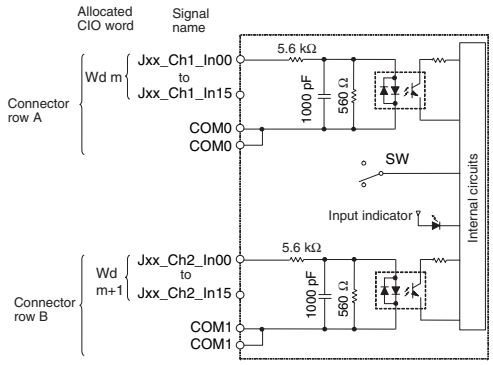

- The signal names of the terminals are the device variable names. The device variable names are the names that use "Jxx" as the device name.

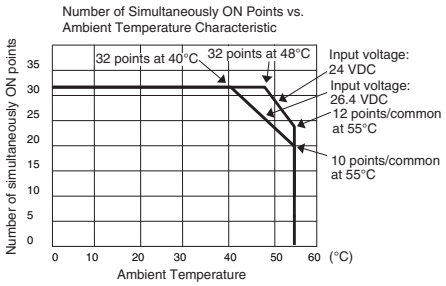

External connection and terminal-device variable diagram

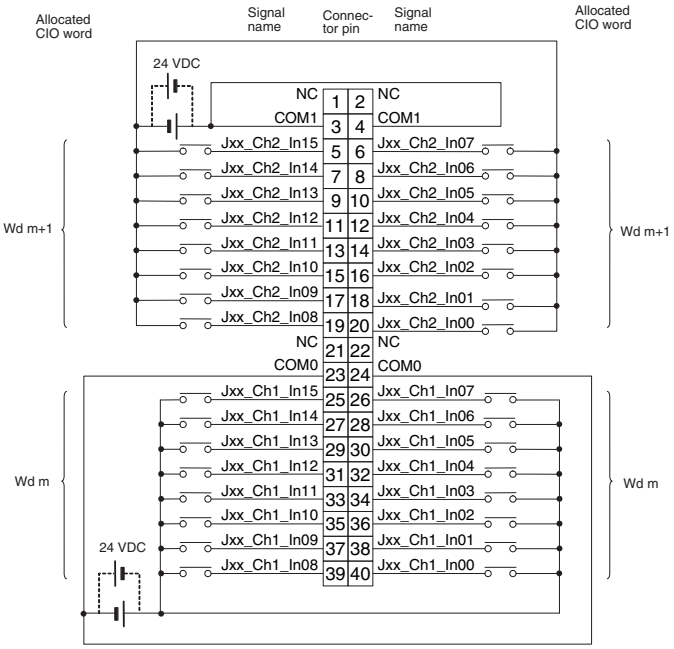

- The input power polarity can be connected in either direction.
- Be sure to wire both pins 23 and 24 (COM0), and set the same polarity for both pins.
- Be sure to wire both pins 3 and 4 (COM1), and set the same polarity for both pins.
- The signal names of the terminals are the device variable names. The device variable names are the names that use "Jxx" as the device name.

* The ON response time will be 20 μs maximum and OFF response time will be 400 μs maximum even if the response times are set to 0 ms due to internal element delays.

Note: Observe the following restrictions when connecting to a 2-wire sensor.

- Make sure the input power supply voltage is larger than the ON voltage (19 V) plus the residual voltage of the sensor (approx. 3 V).
- Use a sensor with a minimum load current of 3 mA min.
- Connect bleeder resistance if you connect a sensor with a minimum load current of 5 mA or higher.

CJ1W-ID233 DC Input Unit (24 VDC, 32 Points)

Name	32-point DC Input Unit with MIL Connector
Model	CJ1W-ID233
Rated Input Voltage	24 VDC
Rated Input Voltage Range	20.4 to 26.4 VDC
Input Impedance	5.6 kΩ
Input Current	4.1 mA typical (at 24 VDC)
ON Voltage/ON Current	19.0 VDC min./3 mA min.
OFF Voltage/OFF Current	5 VDC max./1 mA max.
ON Response Time	8.0 ms max. (Can be set to between 0 and 32 in the Setup.) *
OFF Response Time	8.0 ms max. (Can be set to between 0 and 32 in the Setup.) *
Number of Circuits	32 (16 points/common, 2 circuits)
Number of Simultaneously ON Points	75% (12 points/common) simultaneously ON (at 24 VDC) (Refer to the following illustration.)
Insulation Resistance	20 MΩ min. between external terminals and the GR terminal (100 VDC)
Dielectric Strength	1,000 VAC between the external terminals and the GR terminal for 1 minute at a leakage current of 10 mA max.
Internal Current Consumption	200 mA max.
Weight	70 g max.
Accessories	None

Circuit Configuration

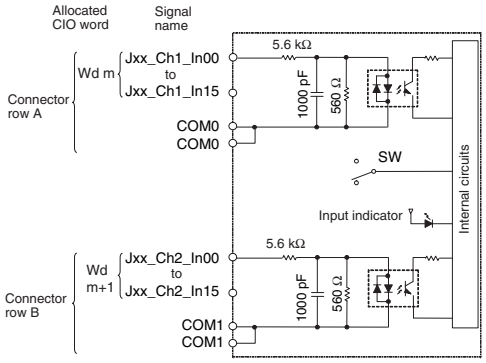

- The signal names of the terminals are the device variable names. The device variable names are the names that use "Jxx" as the device name.

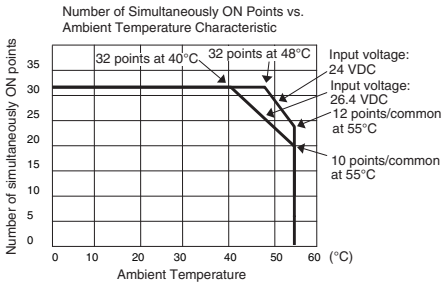

External connection and terminal-device variable diagram

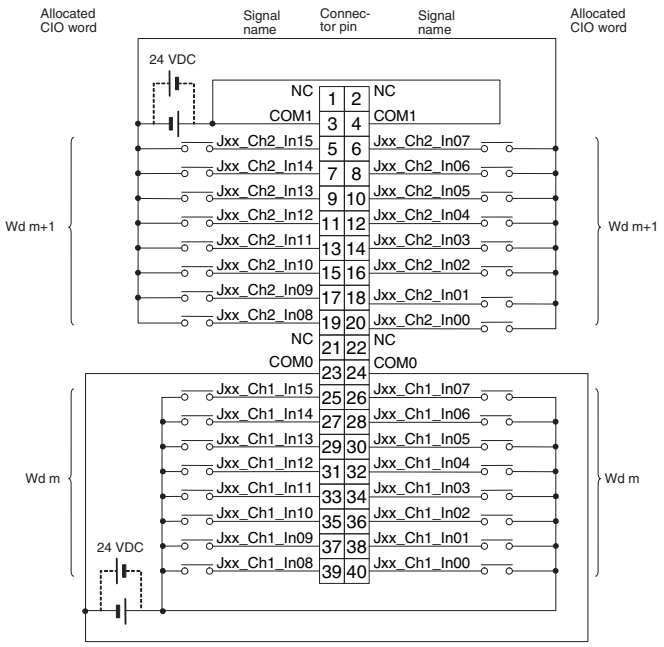

- The input power polarity can be connected in either direction.
- Be sure to wire both pins 23 and 24 (COM0), and set the same polarity for both pins.
- Be sure to wire both pins 3 and 4 (COM1), and set the same polarity for both pins.
- The signal names of the terminals are the device variable names. The device variable names are the names that use "Jxx" as the device name.

* The ON response time will be 15 μs maximum and OFF response time will be 90 μs maximum even if the response times are set to 0 ms due to internal element delays.

Note: Observe the following restrictions when connecting to a 2-wire sensor.

- Make sure the input power supply voltage is larger than the ON voltage (19 V) plus the residual voltage of the sensor (approx. 3 V).
- Use a sensor with a minimum load current of 3 mA min.
- Connect bleeder resistance if you connect a sensor with a minimum load current of 5 mA or higher.

CJ1W-ID261 DC Input Unit (24 VDC, 64 Points)

Name	64-point DC Input Unit with Fujitsu / OTAX Connector
Model	CJ1W-ID261
Rated Input Voltage	24 VDC
Rated Input Voltage Range	20.4 to 26.4 VDC
Input Impedance	5.6 kΩ
Input Current	4.1 mA typical (at 24 VDC)
ON Voltage/ON Current	19.0 VDC min./3 mA min.
OFF Voltage/OFF Current	5 VDC max./1 mA max.
ON Response Time	8.0 ms max. (Can be set to between 0 and 32 in the Setup.) *
OFF Response Time	8.0 ms max. (Can be set to between 0 and 32 in the Setup.) *
Number of Circuits	64 (16 points/common, 4 circuits)
Number of Simultaneously ON Points	50% (16 points/common) simultaneously ON (at 24 VDC) (Refer to the following illustrations.)
Insulation Resistance	20 MΩ min. between external terminals and the GR terminal (100 VDC)
Dielectric Strength	1,000 VAC between the external terminals and the GR terminal for 1 minute at a leakage current of 10 mA max.
Internal Current Consumption	90 mA max.
Weight	110 g max.
Accessories	None

Circuit Configuration

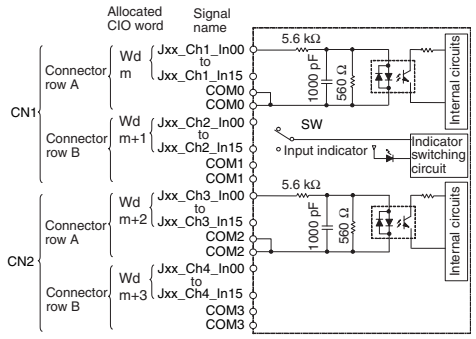

- The signal names of the terminals are the device variable names. The device variable names are the names that use "Jxx" as the device name.

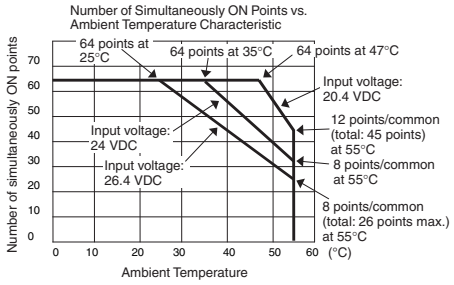

External connection and terminal-device variable diagram

CN1

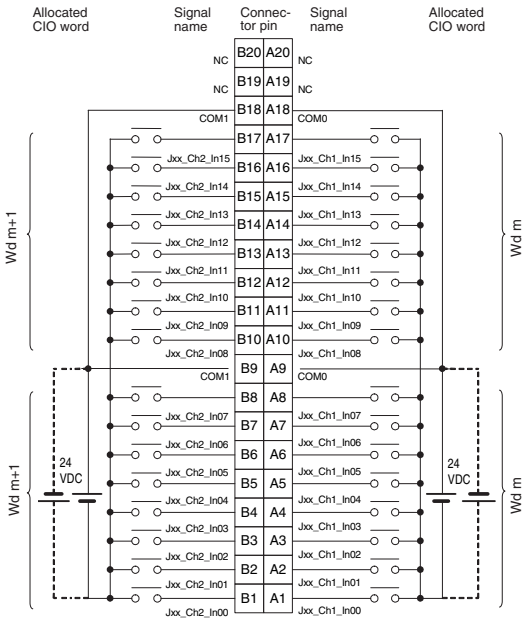

- The input power polarity can be connected in either direction.
- Be sure to wire both pins A9 and A18 (COM0) of CN1, and set the same polarity for both pins.
- Be sure to wire both pins B9 and B18 (COM1) of CN1, and set the same polarity for both pins.
- The signal names of the terminals are the device variable names. The device variable names are the names that use "Jxx" as the device name.

CN2

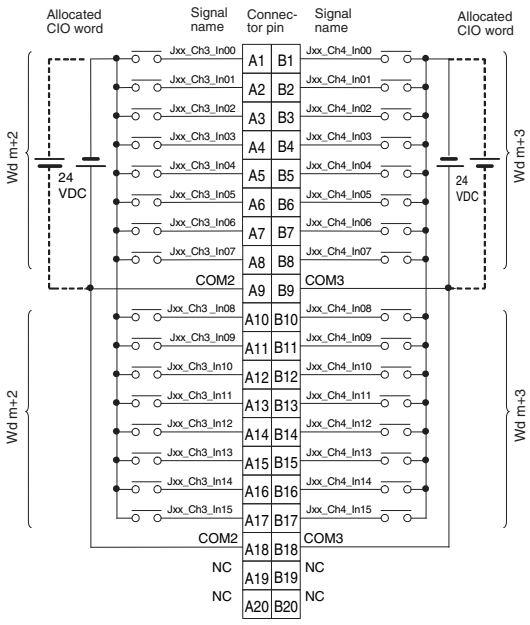

- The input power polarity can be connected in either direction.
- Be sure to wire both pins A9 and A18 (COM2) of CN2, and set the same polarity for both pins.
- Be sure to wire both pins B9 and B18 (COM3) of CN2, and set the same polarity for both pins.
- The signal names of the terminals are the device variable names. The device variable names are the names that use "Jxx" as the device name.

* The ON response time will be 120 μs maximum and OFF response time will be 400 μs maximum even if the response times are set to 0 ms due to internal element delays.

Note: Observe the following restrictions when connecting to a 2-wire sensor.

- Make sure the input power supply voltage is larger than the ON voltage (19 V) plus the residual voltage of the sensor (approx. 3 V).
- Use a sensor with a minimum load current of 3 mA min.
- Connect bleeder resistance if you connect a sensor with a minimum load current of 5 mA or higher.

CJ1W-ID262 DC Input Unit (24 VDC, 64 Points)

Name	64-point DC Input Unit with MIL Connector
Model	CJ1W-ID262
Rated Input Voltage	24 VDC
Rated Input Voltage Range	20.4 to 26.4 VDC
Input Impedance	5.6 kΩ
Input Current	4.1 mA typical (at 24 VDC)
ON Voltage/ON Current	19.0 VDC min./3 mA min.
OFF Voltage/OFF Current	5 VDC max./1 mA max.
ON Response Time	8.0 ms max. (Can be set to between 0 and 32 in the Setup.) *
OFF Response Time	8.0 ms max. (Can be set to between 0 and 32 in the Setup.) *
Number of Circuits	64 (16 points/common, 4 circuits)
Number of Simultaneously ON Points	50% (8 points/common) simultaneously ON (at 24 VDC) (Refer to the following illustrations.)
Insulation Resistance	20 MΩ min. between external terminals and the GR terminal (100 VDC)
Dielectric Strength	1,000 VAC between the external terminals and the GR terminal for 1 minute at a leakage current of 10 mA max.
Internal Current Consumption	90 mA max.
Weight	110 g max.
Accessories	None

Circuit Configuration

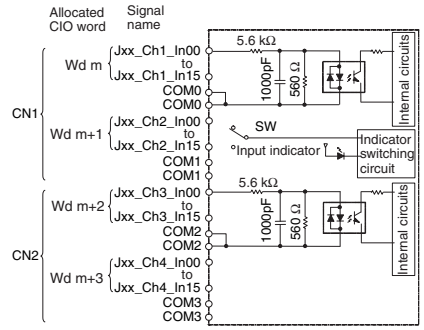

- The signal names of the terminals are the device variable names. The device variable names are the names that use "Jxx" as the device name.

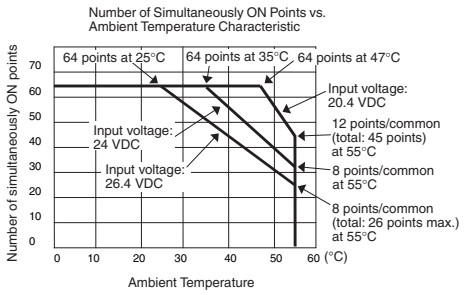

External connection and terminal-device variable diagram

CN1

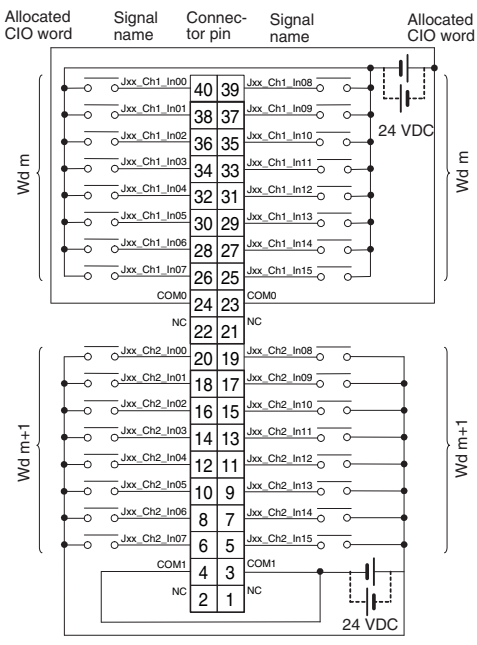

- The input power polarity can be connected in either direction.
- Be sure to wire both pins 23 and 24 (COM0) of CN1, and set the same polarity for both pins.
- Be sure to wire both pins 3 and 4 (COM1) of CN1, and set the same polarity for both pins.
- The signal names of the terminals are the device variable names. The device variable names are the names that use "Jxx" as the device name.

CN2

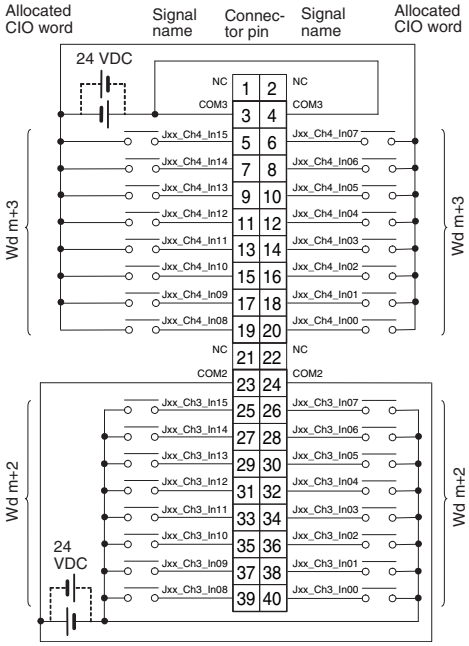

- The input power polarity can be connected in either direction.
- Be sure to wire both pins 23 and 24 (COM2) of CN2, and set the same polarity for both pins.
- Be sure to wire both pins 3 and 4 (COM3) of CN2, and set the same polarity for both pins.
- The signal names of the terminals are the device variable names. The device variable names are the names that use "Jxx" as the device name.

* The ON response time will be 120 μs maximum and OFF response time will be 400 μs maximum even if the response times are set to 0 ms due to internal element delays.

Note: Observe the following restrictions when connecting to a 2-wire sensor.

- Make sure the input power supply voltage is larger than the ON voltage (19 V) plus the residual voltage of the sensor (approx. 3 V).
- Use a sensor with a minimum load current of 3 mA min.
- Connect bleeder resistance if you connect a sensor with a minimum load current of 5 mA or higher.

CJ1W-IA201 AC Input Unit (200 VAC, 8 Points)

Name	8-point AC Input Unit with Terminal Block
Model	CJ1W-IA201
Rated Input Voltage	200 to 240 VAC 50/60 Hz
Rated Input Voltage Range	170 to 264 VAC
Input Impedance	21 kΩ (50 Hz), 18 kΩ (60 Hz)
Input Current	9 mA typical (at 200 VAC, 50 Hz), 11 mA typical (at 200 VAC, 60 Hz)
ON Voltage/ON Current	120 VAC min./4 mA min.
OFF Voltage/OFF Current	40 VAC max./2 mA max.
ON Response Time	18.0 ms max. (default setting: 8 ms) *1
OFF Response Time	48.0 ms max. (default setting: 8 ms) *1
Number of Circuits	8 (8 points/common, 1 circuit)
Number of Simultaneously ON Points	100% (8 points/common) simultaneously ON
Insulation Resistance	20 MΩ min. between external terminals and the GR terminal (500 VDC)
Dielectric Strength	2,000 VAC between the external terminals and the GR terminal for 1 minute at a leakage current of 10 mA max.
Internal Current Consumption	80 mA max.
Weight	130 g max.
Accessories	None
Circuit Configuration	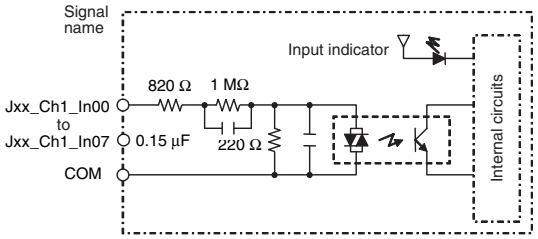 • The signal names of the terminals are the device variable names. The device variable names are the names that use "Jxx" as the device name.
External connection and terminal-device variable diagram	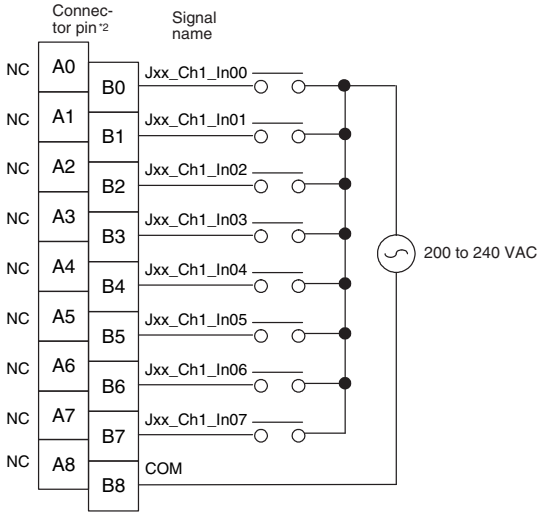 • The signal names of the terminals are the device variable names. The device variable names are the names that use "Jxx" as the device name.

*1. Can be set to 0 ms, 0.5 ms, 1 ms, 2 ms, 4 ms, 8 ms, 16 ms, or 32ms in the settings. When the response times have been set to 0 ms, the ON response time will be 10 ms maximum and the OFF response time will be 40 ms maximum due to internal element delays.

*2. Terminal numbers A0 to A8 and B0 to B8 are used in the external connection and terminal-device variable diagrams. They are not printed on the Units.

Note: Although 16 I/O bits (1 word) are allocated, only 8 of these can be used for external I/O.

CJ1W-IA111 AC Input Unit (100 VAC, 16 points)

Name	16-point AC Input Unit with Terminal Block
Model	CJ1W-IA111
Rated input voltage	100 to 120 VAC 50/60 Hz *2
Rated Input Voltage Range	85 to 132 VAC
Input Impedance	14.5 kΩ (50 Hz), 12 kΩ (60 Hz)
Input Current	7 mA typical (at 100 VAC, 50 Hz), 8 mA typical (at 100 VAC, 60 Hz)
ON Voltage/ON Current	70 VAC min./4 mA min
OFF Voltage/OFF Current	20 VAC max./2 mA max
ON Response Time	18 ms max. (default setting: 8 ms) *1
OFF Response Time	48 ms max. (default setting: 8 ms) *1
Number of Circuits	16 (16 points/common, 1 circuit)
Number of Inputs ON Simultaneously	100% simultaneously ON (16 points/common)
Insulation Resistance	20 MΩ min. between external terminals and the GR terminal (500 VDC)
Dielectric Strength	2,000 VAC between the external terminals and the GR terminal for 1 minute at a leakage current of 10 mA max.
Internal Current Consumption	90 mA max.
Weight	130 g max.
Accessories	None
Circuit Layout	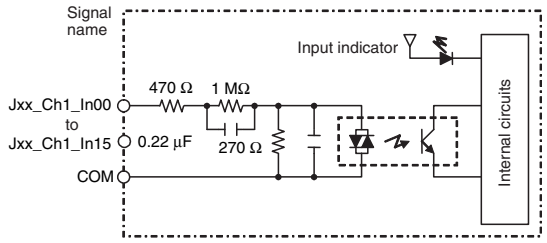 • The signal names of the terminals are the device variable names. The device variable names are the names that use "Jxx" as the device name.
External connection and terminal-device variable diagram	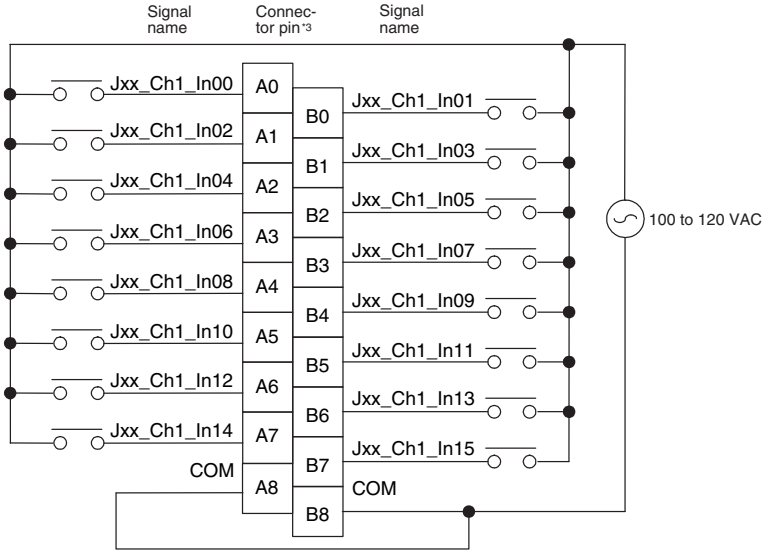 • The signal names of the terminals are the device variable names. The device variable names are the names that use "Jxx" as the device name.

*1. Can be set to 0 ms, 0.5 ms, 1 ms, 2 ms, 4 ms, 8 ms, 16 ms, or 32ms in the settings. When the response times have been set to 0 ms, the ON response time will be 10 ms maximum and the OFF response time will be 40 ms maximum due to internal element delays.
*2. Use an input voltage of 90 VAC or higher when connecting 2-wire sensors.
*3. Terminal numbers A0 to A8 and B0 to B8 are used in the external connection and terminal-device variable diagrams. They are not printed on the Units.

Bit Allocations for Input Unit

8-point Input Unit

Allocated CIO word		Signal name (CJ/NJ)
CIO	Bit	
Wd m (Input)	00	IN0/Jxx_Ch1_In00
	01	IN1/Jxx_Ch1_In01
	:	:
	06	IN6/Jxx_Ch1_In06
	07	IN7/Jxx_Ch1_In07
	08	–
	09	–
	:	:
	14	–
	15	–

16-point Input Unit

Allocated CIO word		Signal name (CJ/NJ)
CIO	Bit	
Wd m (Input)	00	IN0/Jxx_Ch1_In00
	01	IN1/Jxx_Ch1_In01
	:	:
	14	IN14/Jxx_Ch1_In14
	15	IN15/Jxx_Ch1_In15

32-point Input Unit

Allocated CIO word		Signal name (CJ/NJ)
CIO	Bit	
Wd m (Input)	00	IN0/Jxx_Ch1_In00
	01	IN1/Jxx_Ch1_In01
	:	:
	14	IN14/Jxx_Ch1_In14
	15	IN15/Jxx_Ch1_In15
Wd m+1 (Input)	00	IN0/Jxx_Ch2_In00
	01	IN1/Jxx_Ch2_In01
	:	:
	14	IN14/Jxx_Ch2_In14
	15	IN15/Jxx_Ch2_In15

64-point Input Unit

Allocated CIO word		Signal name (CJ/NJ)
CIO	Bit	
Wd m (Input)	00	IN0/Jxx_Ch1_In00
	01	IN1/Jxx_Ch1_In01
	:	:
	14	IN14/Jxx_Ch1_In14
	15	IN15/Jxx_Ch1_In15
Wd m+1 (Input)	00	IN0/Jxx_Ch2_In00
	01	IN1/Jxx_Ch2_In01
	:	:
	14	IN14/Jxx_Ch2_In14
	15	IN15/Jxx_Ch2_In15
Wd m+2 (Input)	00	IN0/Jxx_Ch3_In00
	01	IN1/Jxx_Ch3_In01
	:	:
	14	IN14/Jxx_Ch3_In14
	15	IN15/Jxx_Ch3_In15
Wd m+3 (Input)	00	IN0/Jxx_Ch4_In00
	01	IN1/Jxx_Ch4_In01
	:	:
	14	IN14/Jxx_Ch4_In14
	15	IN15/Jxx_Ch4_In15

External Interface

8-point/16-point Units (18-point Terminal Blocks)

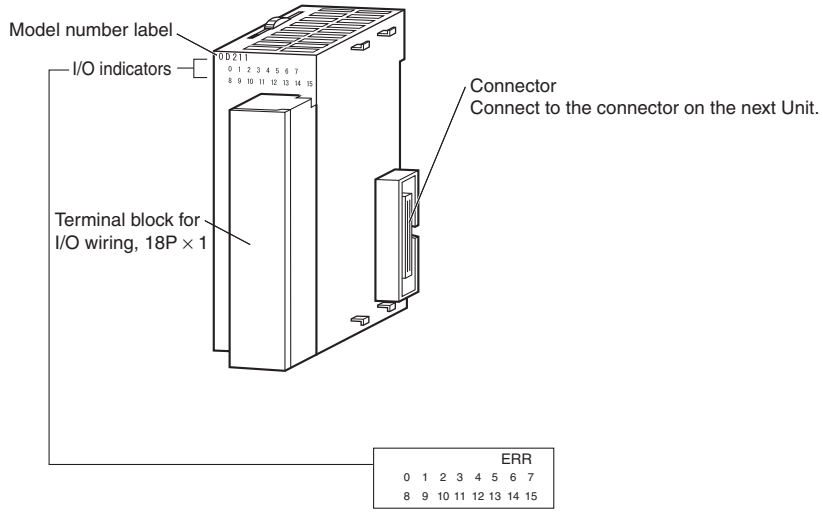

32-point Units (Models with 40-point Fujitsu / OTAX Connector or MIL Connector)

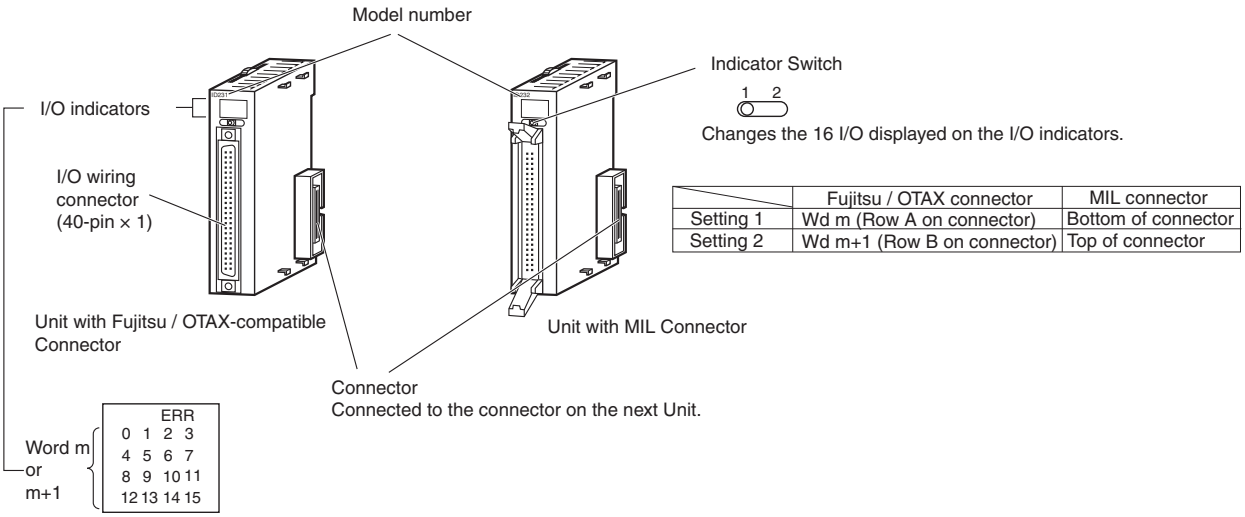

	Fujitsu / OTAX connector	MIL connector
Setting 1	Wd m (Row A on connector)	Bottom of connector
Setting 2	Wd m+1 (Row B on connector)	Top of connector

64-point Units (Models with Two 40-point Fujitsu / OTAX Connectors or MIL Connector)

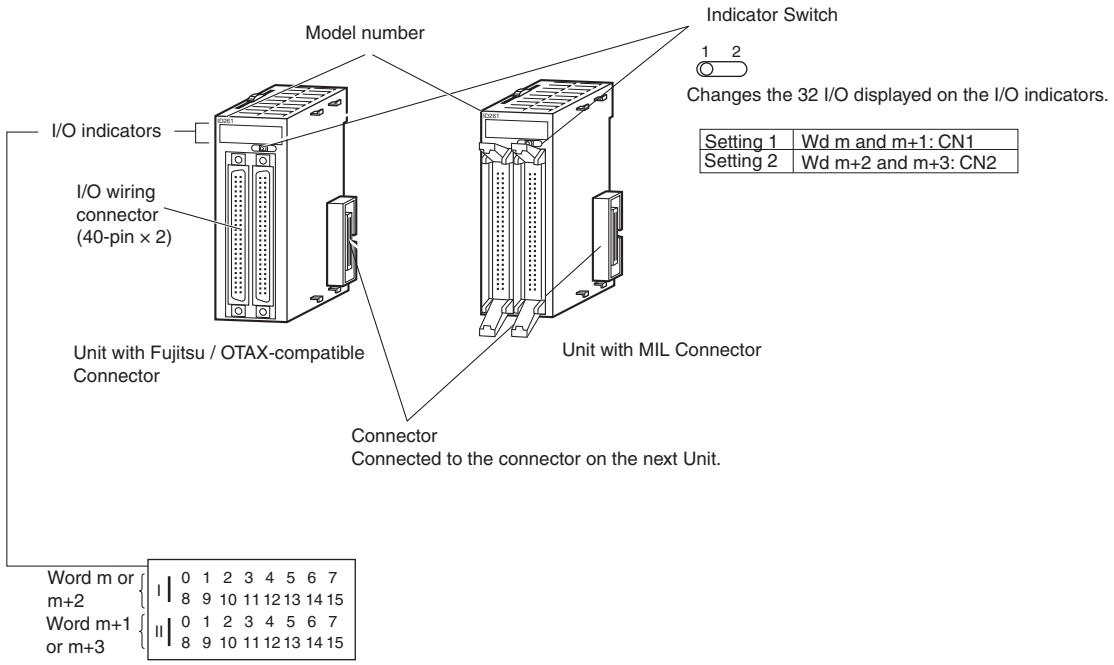

Wiring Basic I/O Units with Terminal Blocks

Electric Wires

The following wire gauges are recommended.

Terminal Block Connector	Wire Size
18-terminal	AWG 22 to 18 (0.32 to 0.82 mm^2)

Crimp terminals

Use crimp terminals (M3) having the dimensions shown below.

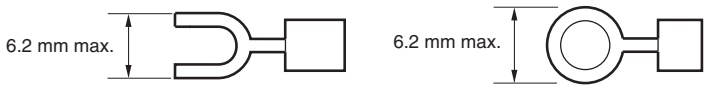

I/O Unit Wiring Methods

An I/O Unit can be connected to an external device by any of the following three methods.

1. User-provided Cable
An I/O Unit can be directly connected to an external device by using a connector.

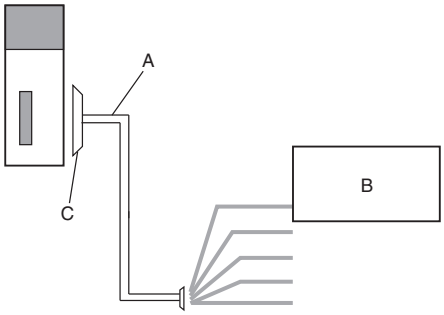

A	User-provided cable
B	External device
C	Connector

2. Connector-Terminal Block Conversion Unit
Use a Connecting Cable to connect to a Connector-Terminal Block Conversion Unit.
Converting the I/O Unit connector to a screw terminal block or push-in terminal block makes it easy to connect external devices.

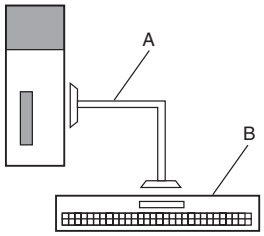

A	Connecting Cable for Connector-Terminal Block Conversion Unit XW2Z
B	Connector-Terminal Block Conversion Unit XW2□

3. I/O Relay Terminal
Use a Connecting Cable to connect to an I/O Relay Terminal.
The I/O specifications can be converted to relay outputs and AC inputs by connecting the I/O Relay Terminal to an I/O Unit.

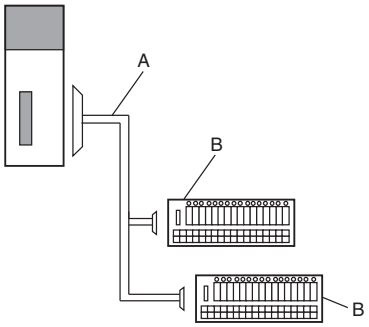

A	Connecting Cable for I/O Relay Terminals XW2Z-R
B	I/O Relay Terminals G70V, G7TC Relay Terminals G70D, G70R I/O Terminal Socket G70A Or, conversion to relay outputs and AC inputs.

1. Using User-made Cables with Connector

Available Connectors

Use the following connectors when assembling a connector and cable.

32- and 64-point Basic I/O Units with Fujitsu / OTAX-compatible Connectors

Applicable Units

Model	Specifications	Pins
CJ1W-ID231	Input Unit, 24 VDC, 32 inputs	40
CJ1W-ID261	Input Unit, 24 VDC, 64 inputs	

Applicable Cable-side Connectors

Connection	Pins	OMRON set	Fujitsu / OTAX parts
Solder-type	40	C500-CE404	Socket: Fujitsu FCN-361J040-AU Connector cover: Fujitsu FCN-360C040-J2 OTAX N360C040J2
Crimped	40	C500-CE405	Socket: Fujitsu FCN-363J040 OTAX N363J040 Connector cover: Fujitsu FCN-360C040-J2 OTAX N360C040J2 Contacts: Fujitsu FCN-363J-AU OTAX N363JAU
Pressure-welded	40	C500-CE403	Fujitsu FCN-367J040-AU/F

32- and 64-point Basic I/O Units with MIL Connectors

Applicable Units

Model	Specifications	Pins
CJ1W-ID232 CJ1W-ID233	Input Unit, 24 VDC, 32 inputs	40
CJ1W-ID262	Input Unit, 24 VDC, 64 inputs	

Applicable Cable-side Connectors

Connection	Pins	OMRON set	DDK parts
Pressure-welded	40	XG4M-4030-T *1	FRC5-A040-3T0S
Crimped	40	XG5N-401 *2	HU-40OS2-001
	–	Crimp Contacts for XG5N *3 XG5W-0232 (loose contacts: 100 pieces) XG5W-0232-R (reel contacts: 10,000 pieces)	HU-111S

*1. Socket and Stain Relief set.
*2. Crimp Contacts (XG5W-0232) are sold separately.
*3. Applicable wire size is AWG 28 to 24. For applicable conductor construction and more information, visit the OMRON website at www.ia.omron.com.

Wire Size

We recommend using cable with wire gauges of AWG 28 to 24 (0.08 to 0.2 mm^2). Use cable with external wire diameters of 1.61 mm max.

Crimping Tools

The following models are recommended for crimping tools and pressure-welding tools for Fujitsu / OTAX connectors.

Tools for Crimped Connectors (Fujitsu Component)

Product Name	Model
Hand Crimping Tool	FCN-363T-T005/H
Contact Withdrawal Tool	FCN-360T-T001/H

Tools for Pressure-welded Connectors (Fujitsu Component)

Product Name	Model
Hand Press	FCN-707T-T101/H
Cable Cutter	FCN-707T-T001/H
Locator Plate	FCN-367T-T012/H

The following models are recommended for tools for OMRON MIL connectors.

Tools for Pressure-welded Connectors (OMRON)

Product Name	Model
Pressure-welding Tool	XY2B-0002
Attachment	XY2B-1007

Tools for Crimped Connectors (OMRON)

Product Name	Model
Manual Crimping Tool	XY2B-7007

2. Connecting Connector-Terminal Block Conversion Units

Connection Patterns for Connector-Terminal Block Conversion Units

Pattern	Configuration
A	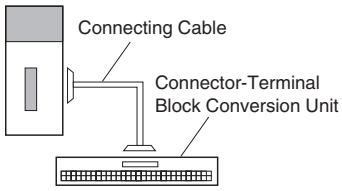
B	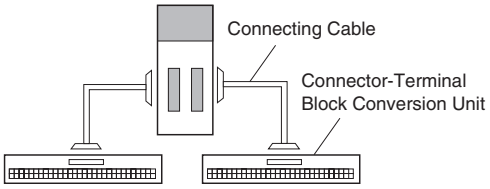

Combination of I/O Units with Connector-Terminal Block Conversion Units

Unit	I/O capacity	Number of connectors	Polarity	Connection pattern	Connecting Cable *	Connector-Terminal Block Conversion Unit	Wiring method	Common terminals
CJ1W-ID231	32 inputs	1 Fujitsu / OTAX connector	NPN/PNP	A	XW2Z-□□□B	XW2K-40G-O32A	Push-In Plus	No
						XW2K-40G-O32A-IN	Push-In Plus	Yes
						XW2R-J34GD-C1	Phillips screw	No
						XW2R-E34GD-C1	Slotted screw (rise up)	No
CJ1W-ID232	32 inputs	1 MIL connector	NPN/PNP	A	XW2Z-□□□K	XW2K-40G-O32C	Push-In Plus	No
						XW2K-40G-O32C-IN	Push-In Plus	Yes
						XW2R-J34GD-C2	Phillips screw	No
						XW2R-E34GD-C2	Slotted screw (rise up)	No
CJ1W-ID233	32 inputs	1 MIL connector	NPN/PNP	A	XW2Z-□□□K	XW2K-40G-O32C	Push-In Plus	No
						XW2K-40G-O32C-IN	Push-In Plus	Yes
						XW2R-J34GD-C2	Phillips screw	No
						XW2R-E34GD-C2	Slotted screw (rise up)	No
CJ1W-ID261	64 inputs	2 Fujitsu / OTAX connectors	NPN/PNP	B	XW2Z-□□□B (2 pcs)	XW2K-40G-O32A (2 Units)	Push-In Plus	No
						XW2K-40G-O32A-IN (2 Units)	Push-In Plus	Yes
						XW2R-J34GD-C1 (2 Units)	Phillips screw	No
						XW2R-E34GD-C1 (2 Units)	Slotted screw (rise up)	No
CJ1W-ID262	64 inputs	2 MIL connectors	NPN/PNP	B	XW2Z-□□□K (2 pcs)	XW2K-40G-O32C (2 Units)	Push-In Plus	No
						XW2K-40G-O32C-IN (2 Units)	Push-In Plus	Yes
						XW2R-J34GD-C2 (2 Units)	Phillips screw	No
						XW2R-E34GD-C2 (2 Units)	Slotted screw (rise up)	No

* The box □ is replaced by the cable length.
Note: For details, refer to the XW2K series Datasheet (Cat. No. G152) and XW2R Datasheet.

3. Connecting I/O Relay Terminals

Connection Patterns for I/O Relay Terminals

Pattern	Configuration
A	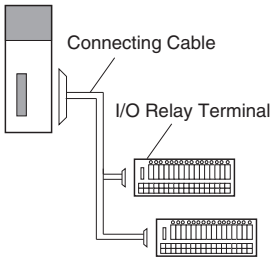
B	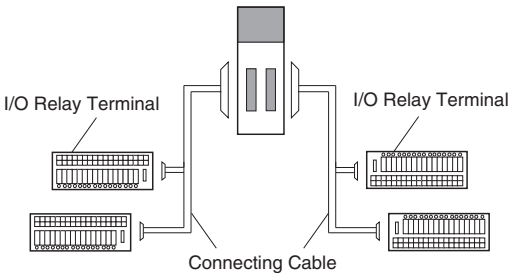

Combination of I/O Units with I/O Relay Terminals and Connecting Cables

I/O Units				Connection pattern	Connecting Cables		I/O Relay Terminals			
Model	I/O capacity	External connectors	Polarity		Model *1	Quantity required	Model	I/O points	Quantity required	Wiring method
CJ1W-ID231	32 inputs	1 Fujitsu / OTAX connector (40 p)	Sinking/ Sourcing (NPN/PNP)	A	XW2Z-RI□C-□	1	G70V-SID16P(-1)(-C16) *2	16	2	Push-in spring
							G7TC-ID/IA16	16		Screw terminal
							G70A-ZIM16-5 *3	16		
CJ1W-ID232	32 inputs	1 MIL connector (40 p)	Sinking/ Sourcing (NPN/PNP)	A	XW2Z-RO□-□-D1	1	G70V-SID16P(-1)(-C16) *2	16	2	Push-in spring
							G7TC-ID/IA16	16		Screw terminal
							G70A-ZIM16-5	16		
CJ1W-ID233	32 inputs	1 MIL connector (40 p)	Sinking/ Sourcing (NPN/PNP)	A	XW2Z-RO□-□-D1	1	G70V-SID16P(-1)(-C16) *2	16	2	Push-in spring
							G7TC-ID/IA16	16		Screw terminal
							G70A-ZIM16-5*3	16		
CJ1W-ID261	64 inputs	2 Fujitsu / OTAX connectors (40 p)	Sinking/ Sourcing (NPN/PNP)	B	XW2Z-RI□C-□	2	G70V-SID16P(-1)(-C16) *2	16	4	Push-in spring
							G7TC-ID/IA16	16		Screw terminal
							G70A-ZIM16-5 *3	16		
CJ1W-ID262	64 inputs	2 MIL connectors (40 p)	Sinking/ Sourcing (NPN/PNP)	B	XW2Z-RO□-□-D1	2	G70V-SID16P(-1)(-C16) *2	16	4	Push-in spring
							G7TC-ID/IA16	16		Screw terminal
							G70A-ZIM16-5 *3	16		

*1. The box □ is replaced by the cable length.
*2. Either NPN inputs or PNP inputs can be used.
*3. G70A-ZIM16-5 is a I/O terminal socket products. Relay is not provided with the socket. Be sure to order a relay, timer separetely. (with G2R Relays mounted: SPDT × 16)

Dimensions

(Unit: mm)

8-point/16-point Units (18-point Terminal Blocks)

CJ1W-ID201
CJ1W-ID211
CJ1W-ID212
CJ1W-IA201
CJ1W-IA111



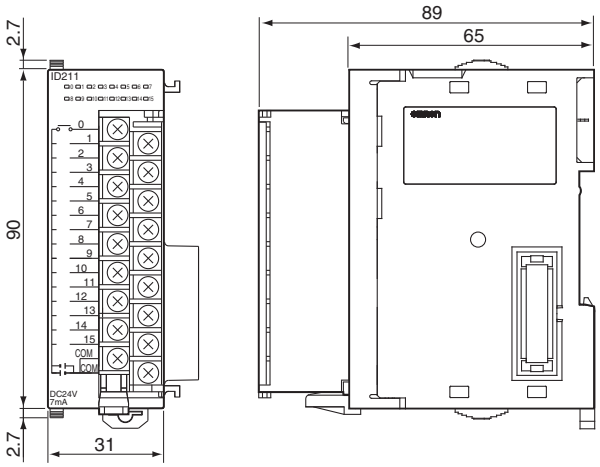

32-point Units (Input Units)

With Fujitsu / OTAX-compatible Connector (40-pin × 1)
CJ1W-ID231



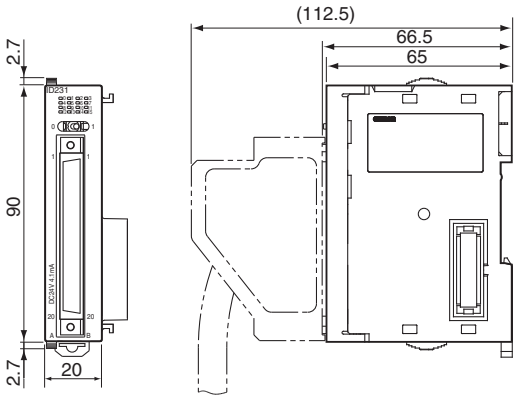

With MIL Connector (40-pin × 1)
CJ1W-ID232
CJ1W-ID233



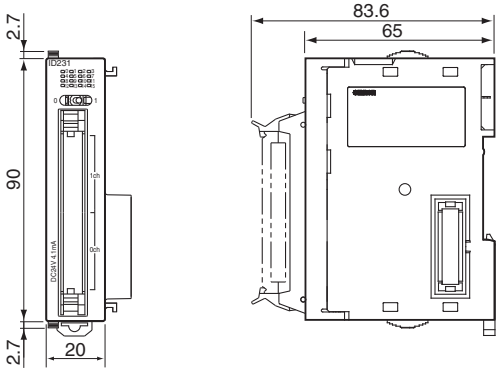

64-point Units (Input Units)

With Fujitsu / OTAX-compatible Connector (40-pin × 2)

CJ1W-ID261



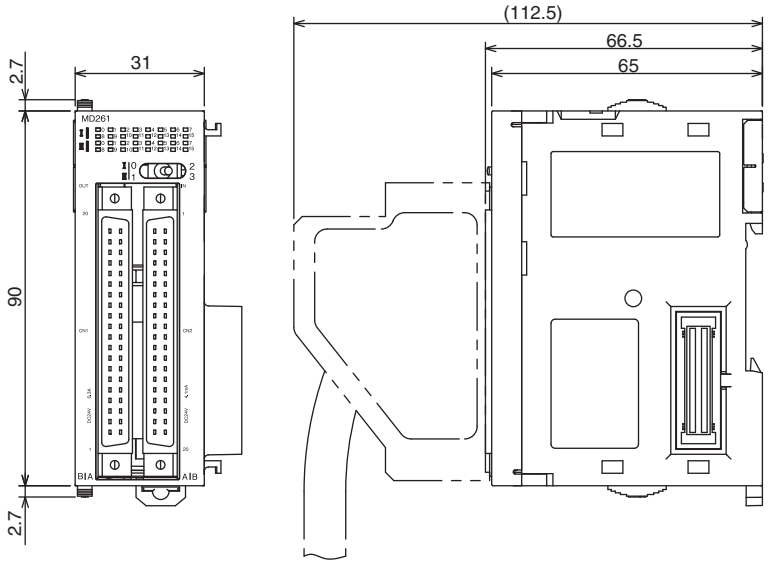

With MIL Connector (40-pin × 2)

CJ1W-ID262



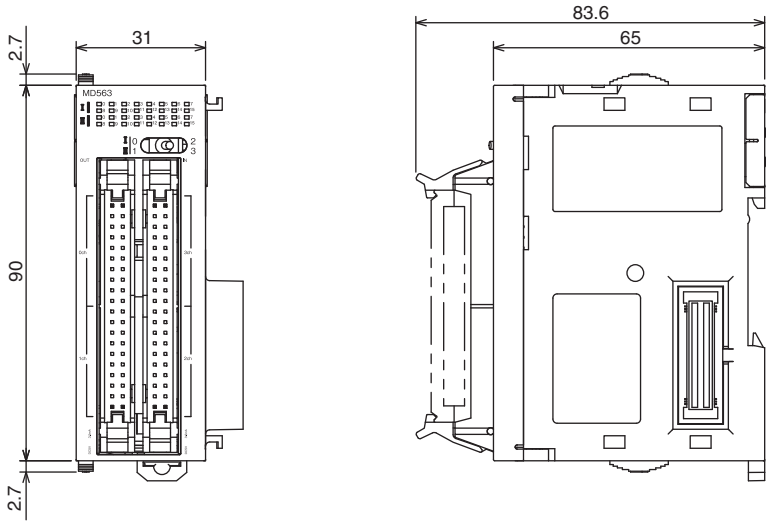

Related Manuals

Name	Cat. No.	Contents
CJ-series CJ2 CPU Unit Hardware User's Manual CJ2H-CPU6□-EIP CJ2H-CPU6□ CJ2M-CPU□□	W472	Describes the following for CJ2 CPU Units: • Overview and features • Basic system configuration • Part nomenclature and functions • Mounting and setting procedure • Remedies for errors • Also refer to the *Software User's Manual* (W473).
SYSMAC CJ Series CJ1H-CPU□□H-R, CJ1G/H-CPU□□H, CJ1G-CPU□□P, CJ1G-CPU□□, CJ1M-CPU□□ Programmable Controllers Operation Manual	W393	Provides an outlines of and describes the design, installation, maintenance, and other basic operations for the CJ-series PLCs.
NJ-series CPU Unit Hardware User's Manual NJ501-□□□□	W500	An introduction to the entire NJ-series system is provided along with the following information on a Controller built with an NJ501 CPU Unit. • Features and system configuration • Introduction • Part names and functions • General specifications • Installation and wiring • Maintenance and inspection Use this manual together with the NJ-series CPU Unit *Software User's Manual* (Cat. No. W501).

Terms and Conditions Agreement

Read and understand this catalog.
Please read and understand this catalog before purchasing the products. Please consult your OMRON representative if you have any questions or comments.

Warranties.
(a) Exclusive Warranty. Omron's exclusive warranty is that the Products will be free from defects in materials and workmanship for a period of twelve months from the date of sale by Omron (or such other period expressed in writing by Omron). Omron disclaims all other warranties, express or implied.
(b) Limitations. OMRON MAKES NO WARRANTY OR REPRESENTATION, EXPRESS OR IMPLIED, ABOUT NON-INFRINGEMENT, MERCHANTABILITY OR FITNESS FOR A PARTICULAR PURPOSE OF THE PRODUCTS. BUYER ACKNOWLEDGES THAT IT ALONE HAS DETERMINED THAT THE
PRODUCTS WILL SUITABLY MEET THE REQUIREMENTS OF THEIR INTENDED USE.
Omron further disclaims all warranties and responsibility of any type for claims or expenses based on infringement by the Products or otherwise of any intellectual property right. (c) Buyer Remedy. Omron's sole obligation hereunder shall be, at Omron's election, to (i) replace (in the form originally shipped with Buyer responsible for labor charges for removal or replacement thereof) the non-complying Product, (ii) repair the non-complying Product, or (iii) repay or credit Buyer an amount equal to the purchase price of the non-complying Product; provided that in no event shall Omron be responsible for warranty, repair, indemnity or any other claims or expenses regarding the Products unless Omron's analysis confirms that the Products were properly handled, stored, installed and maintained and not subject to contamination, abuse, misuse or inappropriate modification. Return of any Products by Buyer must be approved in writing by Omron before shipment. Omron Companies shall not be liable for the suitability or unsuitability or the results from the use of Products in combination with any electrical or electronic components, circuits, system assemblies or any other materials or substances or environments. Any advice, recommendations or information given orally or in writing, are not to be construed as an amendment or addition to the above warranty.
See http://www.omron.com/global/ or contact your Omron representative for published information.

Limitation on Liability; Etc.
OMRON COMPANIES SHALL NOT BE LIABLE FOR SPECIAL, INDIRECT, INCIDENTAL, OR CONSEQUENTIAL DAMAGES, LOSS OF PROFITS OR PRODUCTION OR COMMERCIAL LOSS IN ANY WAY CONNECTED WITH THE PRODUCTS, WHETHER SUCH CLAIM IS BASED IN CONTRACT, WARRANTY, NEGLIGENCE OR STRICT LIABILITY.
Further, in no event shall liability of Omron Companies exceed the individual price of the Product on which liability is asserted.

Suitability of Use.
Omron Companies shall not be responsible for conformity with any standards, codes or regulations which apply to the combination of the Product in the Buyer's application or use of the Product. At Buyer's request, Omron will provide applicable third party certification documents identifying ratings and limitations of use which apply to the Product. This information by itself is not sufficient for a complete determination of the suitability of the Product in combination with the end product, machine, system, or other application or use. Buyer shall be solely responsible for determining appropriateness of the particular Product with respect to Buyer's application, product or system. Buyer shall take application responsibility in all cases.
NEVER USE THE PRODUCT FOR AN APPLICATION INVOLVING SERIOUS RISK TO LIFE OR PROPERTY OR IN LARGE QUANTITIES WITHOUT ENSURING THAT THE SYSTEM AS A WHOLE HAS BEEN DESIGNED TO ADDRESS THE RISKS, AND THAT THE OMRON PRODUCT(S) IS PROPERLY RATED AND INSTALLED FOR THE INTENDED USE WITHIN THE OVERALL EQUIPMENT OR SYSTEM.

Programmable Products.
Omron Companies shall not be responsible for the user's programming of a programmable Product, or any consequence thereof.

Performance Data.
Data presented in Omron Company websites, catalogs and other materials is provided as a guide for the user in determining suitability and does not constitute a warranty. It may represent the result of Omron's test conditions, and the user must correlate it to actual application requirements. Actual performance is subject to the Omron's Warranty and Limitations of Liability.

Change in Specifications.
Product specifications and accessories may be changed at any time based on improvements and other reasons. It is our practice to change part numbers when published ratings or features are changed, or when significant construction changes are made. However, some specifications of the Product may be changed without any notice. When in doubt, special part numbers may be assigned to fix or establish key specifications for your application. Please consult with your Omron's representative at any time to confirm actual specifications of purchased Product.

Errors and Omissions.
Information presented by Omron Companies has been checked and is believed to be accurate; however, no responsibility is assumed for clerical, typographical or proofreading errors or omissions.

2025.4

In the interest of product improvement, specifications are subject to change without notice.

OMRON Corporation
Industrial Automation Company

http://www.ia.omron.com/

(c)Copyright OMRON Corporation 2025 All Right Reserved.