Fuji Electric

Innovating Energy Technology

FUJI SERVO SYSTEM ALPHA7

"Strong" motor with "Speedy"
response maximizes the productivity!



24C1-E-0132d

The dramatically evolved control functions significantly increase the productivity

To gain the maximum advantage of constantly evolving high-tech industrial equipment, a servo system with high responsiveness and high precision is essential. With its dramatically evolved control functions, Fuji Servo System ALPHA7 raises the speed and precision of drive control to the highest level in the industry. It supports a broad range of monitoring functions and has reached the next level of safety. It meets the highest level of customer requirements for productivity improvement, cost reduction, and safety.



Speed and Frequency Response

3.2 kHz

Speedy response realizes ultra-high-speed control



Maximum Instantaneous Torque

350 %

Power of three and half fold of the rating enables response to high-speed commands



INC/ABS

24 bit (16777216 pulses)

Fine resolution encoder further raises the precision of control



Safety

STO

(Safe Torque Off)

Standard Equipment

Supports SS1, SLS, SBC, and SSM among others and provides higher safety



High-speed and high-precision control is realized by the basic performance at the highest level in the industry



Speed and frequency response at 3.2kHz realizes ultra-high-speed control

Fuji's proprietary control algorithm achieves a speed and frequency response at 3.2kHz, the highest level in the industry. This reduces the tact time, enabling high-speed control.

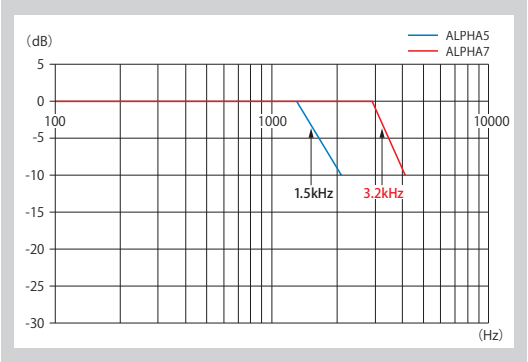



Maximum instantaneous torque of 350%* enables response to high-speed commands

The maximum instantaneous torque of the servo motor is now as high as 350%.

* This is applicable only to certain models.

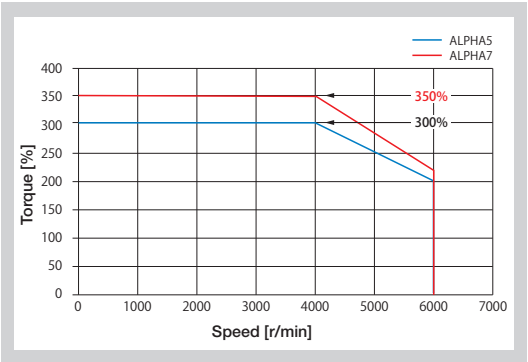



The 24-bit fine resolution INC/ABS encoder significantly improves the precision of control

The encoder resolution is now as high as 24 bits. This provides much higher control precision than before, enabling high-precision control.

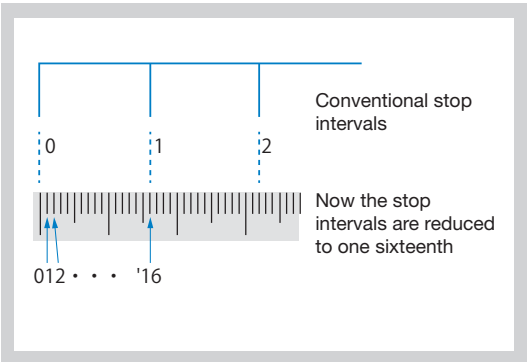



Safer operations are ensured by various safety functions

Standard equipment includes the STO function defined in the international standard IEC61800-5-2. In addition, the WSU-ST1 option adds support for SS1, SLS, SBC, and SSM. These safety functions can be easily configured with parameters.

Equipped as standard with STO (Safe Torque Off)

Upon receiving an input signal from external equipment, the servo system shuts off the output from the servo amplifier and enters into free-run mode.

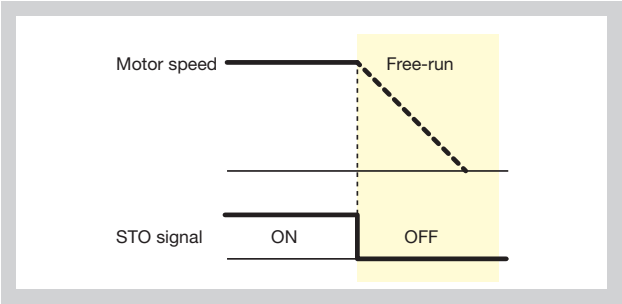

Support for SS1 (Safe Stop 1) *Option

Receiving an input signal from external equipment, the servo system operates the STO function when the speed is reduced to the specified value or the specified period of time elapses.

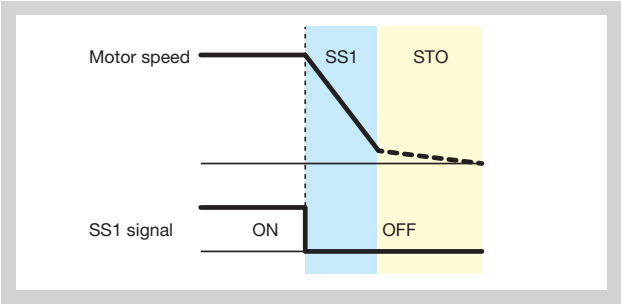

Support for SLS (Safely Limited Speed) *Option

The servo system monitors whether or not the speed limit value is exceeded and, if exceeded, enters into STO mode.

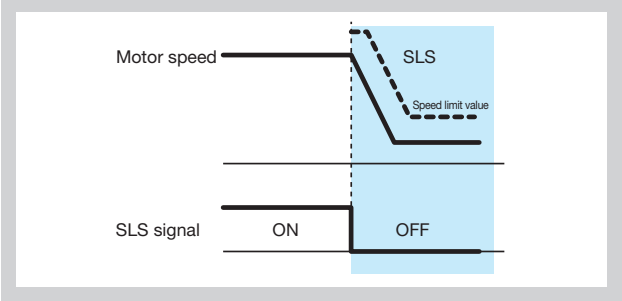

Support for SSM (Safe Speed Monitor) *Option

The servo system outputs the SSM signal when the specified speed is exceeded.

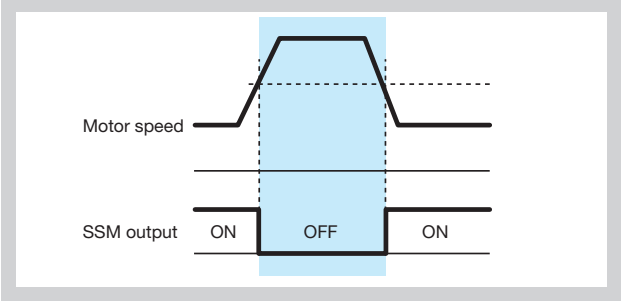

Support for SBC (Safe Brake Control) *Option

The SBC signal is an output signal for controlling an external brake and operates synchronously with STO.

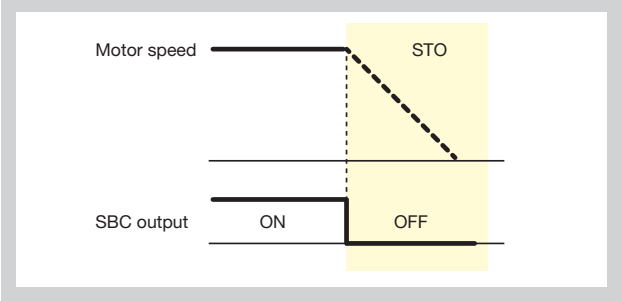

For stable operation of the equipment

Compliance with the SEMI-F47 standard for semiconductor and liquid crystal manufacturing equipment

Lineup of Products That Constitute an ALPHA7 System

Servomotor

Model	Rated speed (Max. speed)	Power supply	Rated output	Servomotor type		Protective construction	Encoder	Type
				Without brake	With brake			
 GYS motor Ultra-low Inertia	3000r/min 0.75kW or lower: 6000r/min 1.0kW or higher: 5000r/min	200V series	11 types 0.05 to 5.0kW	●	●	IP67*1	24-bit ABS	GYS***D7-EB2 (-B)
							24-bit INC	GYS***D7-NB2 (-B)
 GYB motor Medium Inertia	3000r/min (6000r/min)		3 types 0.2, 0.4, 0.75kW	●	●	IP67*1	24-bit ABS	GYB***D7-EB2 (-B/-C/-D)
							24-bit INC	GYB***D7-NB2 (-B/-C/-D)
 GYG motor Medium Inertia	2000r/min (3000r/min)		3 type 1.0, 1.5, 2.0kW	●	●	IP67*1	24-bit ABS	GYG***C7-EB2- (B)
							24-bit INC	GYG***C7-NB2- (B)
	1500r/min (3000r/min)		1 type 0.85, 1.3, 1.8kW	●	●	IP67*1	24-bit ABS	GYG***B7-EB2- (B)
							24-bit INC	GYG***B7-NB2- (B)

*1: Except for shaft-through part (also except connectors for GYS motors of 0.75kW or lower and GYB motors of lead wire type).
*2: ALPHA7 Series servo amplifiers can also power ALPHA5 Series motors (GYS5, GYC5, GYG5 (0.75 kW or less)).
For details on ALPHA5 Series motors, refer to “ALPHA5 Catalog 24C-1-E-0037”.

Servo amplifier

Model		Command interface	Control mode				Power supply	Capacity	Type	Applicable motor series
			Positioning function	Position	Speed	Torque				
 High-speed serial bus	VS type	SX bus		●	●	●	Single-phase or 3-phase 200 to 240VAC	0.05 to 0.75kW	RYT***F7-VS2	GYS GYB GYG
							3-phase 200 to 240VAC	1.0 to 5.0kW		
	LS type		●	●			Single-phase or 3-phase 200 to 240VAC	0.05 to 0.75kW	RYT***F7-LS2	
							3-phase 200 to 240VAC	1.0 to 5.0kW		
 General-purpose interface	VV type	General-purpose (Pulse/ analog/ positioning/ Modbus)	●	●	●	●	Single-phase or 3-phase 200 to 240VAC	0.05 to 0.75kW	RYT***F7-VV2	GYS GYB GYG
							3-phase 200 to 240VAC	1.0 to 5.0kW		
 Open Network	VC type	EtherCAT		●	●	●	Single-phase or 3-phase 200 to 240VAC	0.05 to 0.75kW	RYT***F7-VC2	GYS GYB GYG
							3-phase 200 to 240VAC	1.0 to 5.0kW		

Options

Name	Type	Applicable servo amplifiers	Applicable servomotors	Applicable safety functions	Handling
 Functional safety options	WSU-ST1	RYT***□7-□□2	GY□***□7-□B2-□	• SS1 (Safe Stop 1) • SLS (Safely Limited Speed) • SBC (Safe Brake Control) • SSM (Safe Speed Monitor) • ISO13849-1 Cat.3 PL-d • IEC61508 SIL2 • IEC62061 SIL CL2	• Install on the side face of ALPHA7 amplifier main unit • Control power + 24 V required

Combination table

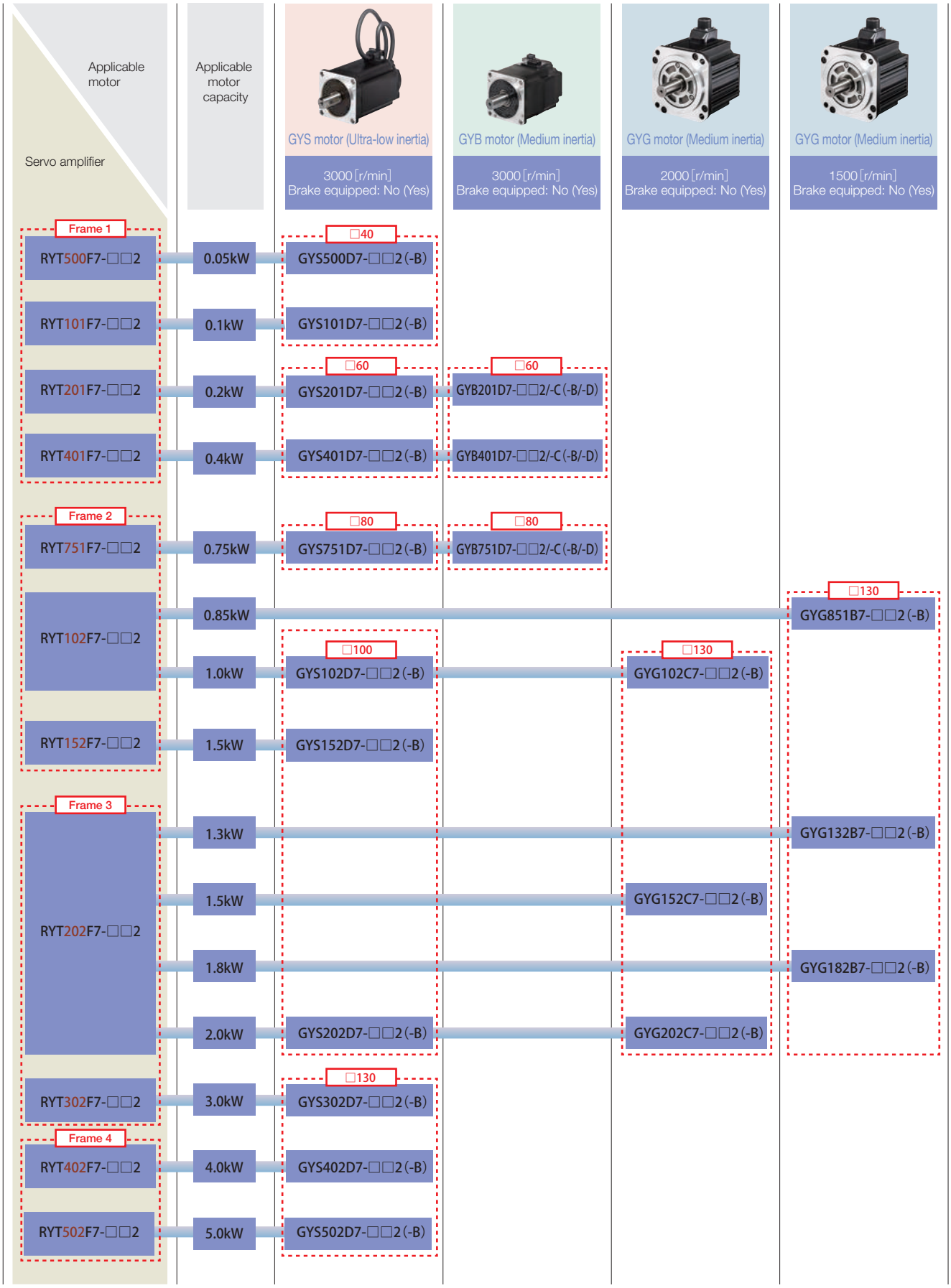

* ALPHA7 Series servo amplifiers can also power ALPHA5 Series motors (GYS5, GYC5, GYG5 (0.75 kW or less)).
For details on ALPHA5 Series motors, refer to “ALPHA5 Catalog 24C-1-E-0037”.
* For gearhead combinations, refer to page 43.

An example system configuration that uses ALPHA7

High-speed serial bus (compatible with SX bus) VS/LS Types

You can easily build a highly functional motion control system that includes synchronous and interpolation control.

▶For information on a motion control system, see the catalog [24C1-J-0086].

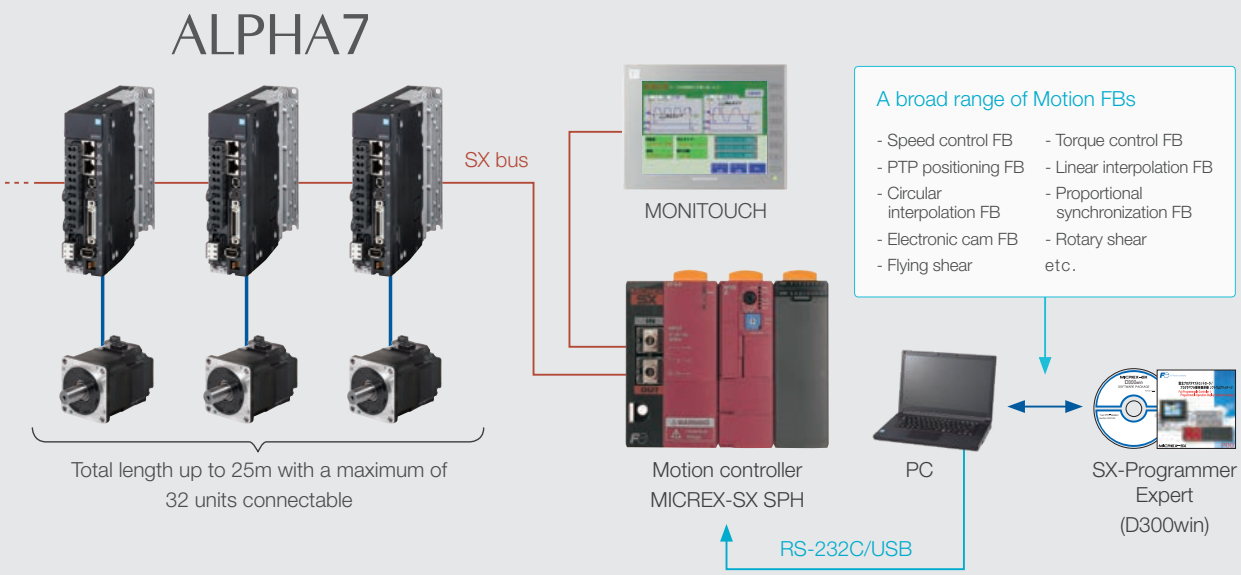

Gain the maximum advantage of ALPHA7 with optional peripheral equipment and software

Motion controller

MICREX-SX

High-speed processing enables the control of constantly evolving high-tech machines

It is possible to perform high-speed processing with a program scan cycle as fast as 0.25ms and I/O refreshing at intervals of 1ms (8192 points). You can build a particular motion control system in a short time by choosing from the rich set of FBs (function blocks) and appropriately combining FBs.



MICREX-SX SPH

Programmable operation display

MONITOUCH V9 series

Provides an intuitive user interface and yet the ability of remote control in a network environment

Supports the VNC server functionality and allows you to remotely monitor and operate MONITOUCH installed at the field from your tablet PC. If an Internet connection environment is available, you can easily implement remote connections in a secure VPN environment.



MONITOUCH

Version upgrade of SX-Programmer Expert (D300win)*

Dedicated software that enables speedy initial setup

The "Multi-axis trace" feature allows you to monitor multiple axes from a single screen

You no longer have to open one screen for each axis when monitoring the servo operation status. Now you can monitor all the axes from a single screen, thereby being able to configure the operation settings more efficiently.

The "Multi-axis parameter edit" feature allows you to adjust up to 32 axes at the same time

You no longer have to configure or adjust parameters separately for each axis. Now you can configure or adjust them for up to 32 axes at the same time.

* See Page 10.

General-purpose interface VV Type

A single unit allows - Positioning run (immediate data operation) based on Modbus-RTU
- Positioning run (with 31 positioning data points) based on Di/Do signals
- Position, speed, and torque control run based on pulse train/analog input

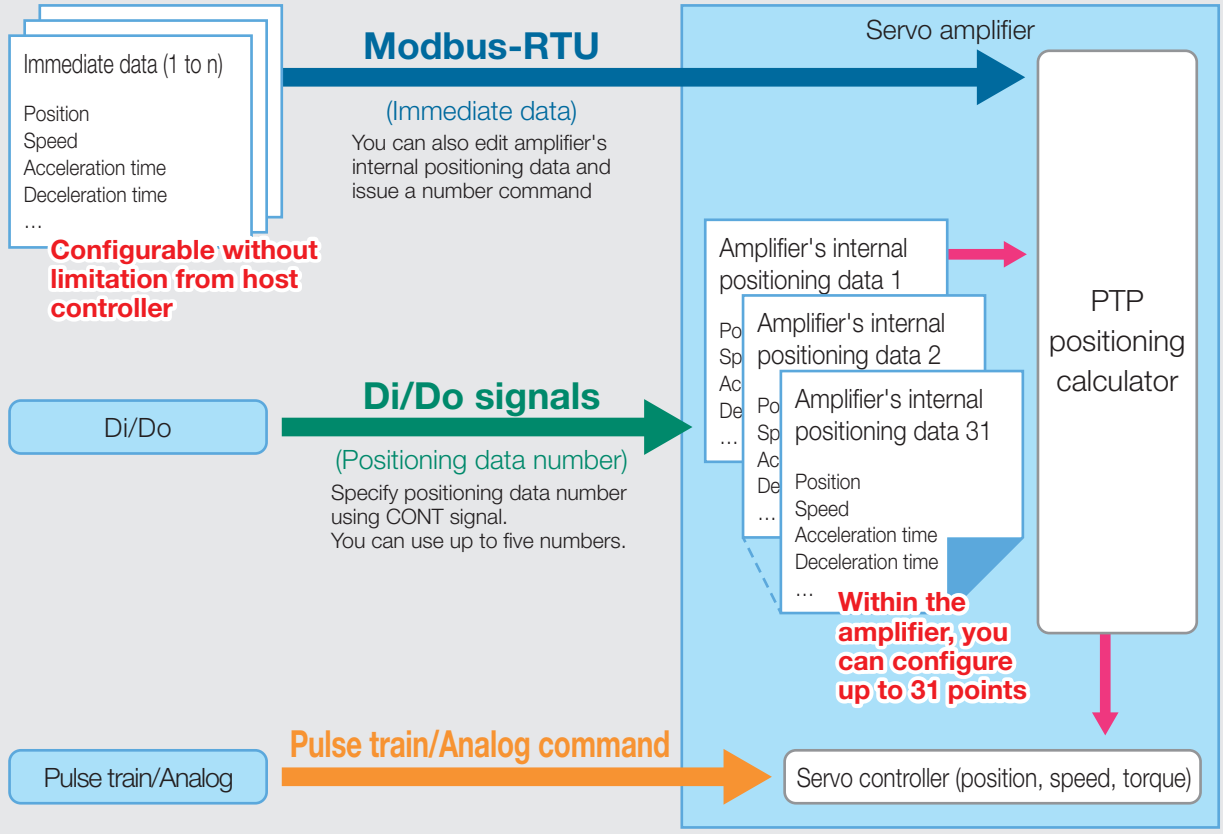

Open Network (with support for EtherCAT) VC Type

EtherCAT applications (with support for six different control modes and for synchronous (DC, SM2) and asynchronous (FreeRUN) modes)

Device profile	CoE (Can application over EtherCAT)
Supported control modes	pp, pv, hm, csp, csv, cst
Synchronous mode	DC (synchronous), SM2 (synchronous), FreeRUN (asynchronous)
Minimum cycle time	125μs

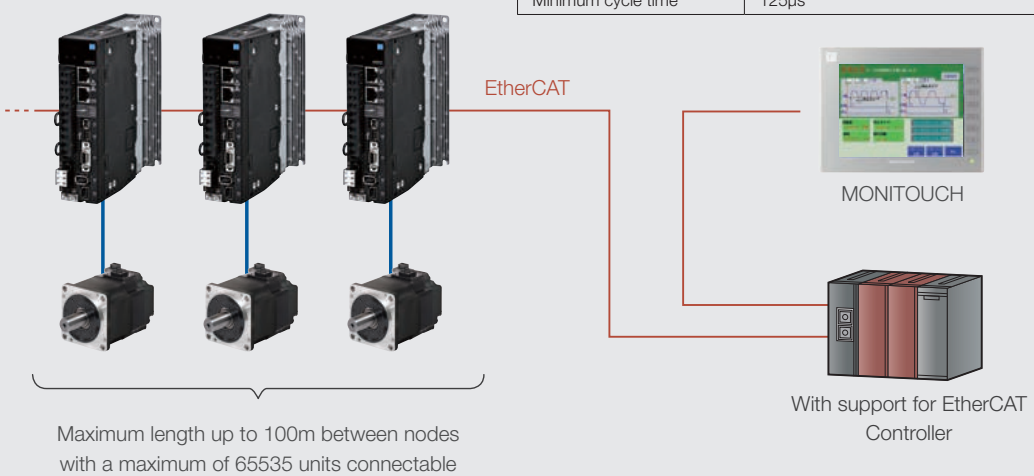

Build and tune your system more easily and speedily

Maximize performance by using MICREX-SX in conjunction

Transparent communication allows you to configure multiple amplifiers from a single central location

You can use the transparent communication feature to configure the parameters of multiple servo amplifiers from a single PC via the motion controller. In addition, connection with Fuji's MONITOUCH allows Wi-Fi communications with servo amplifiers.

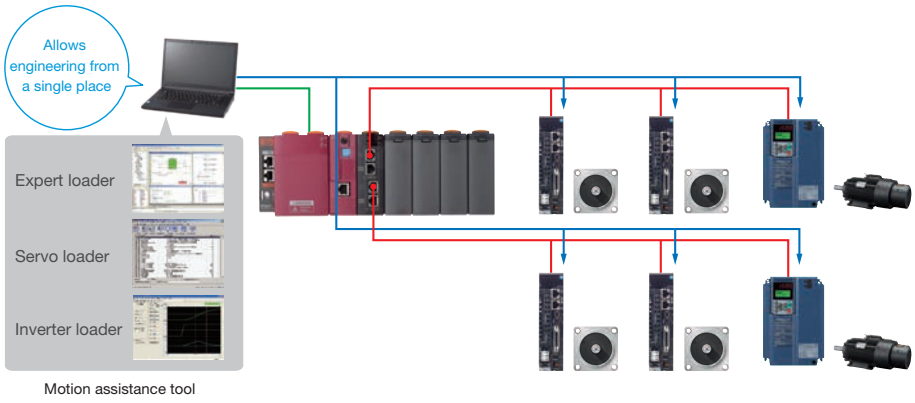

A single CPU performs both sequence and motion control

Adding a single unit of MICREX-SX eliminates the need of a module dedicated to motion control, thus significantly reducing the initial cost. Also, work efficiency is dramatically improved by supporting both sequence and motion with a single programming tool*.

*SX-Programmer Expert (D300win)

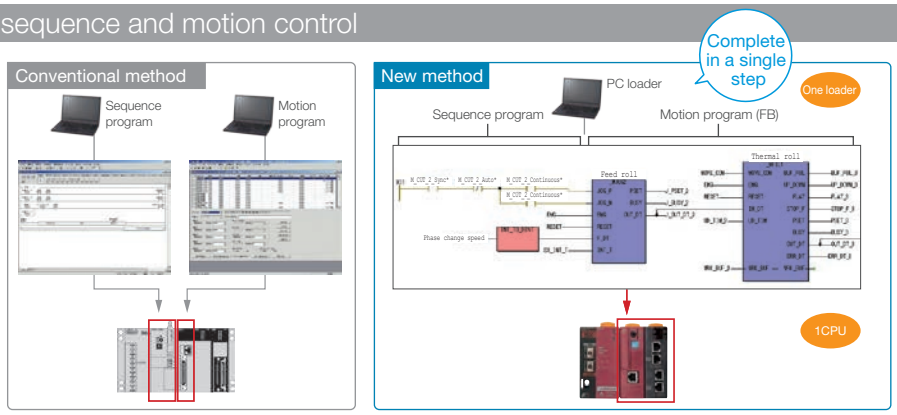

Directly connectable with a single SX bus and easy to wire and extend

Just a single bus cable completes the connection between the controller and servo. When you add an additional control axis to allow for the extension of the machine, you can connect it in a one-touch fashion using a bus cable.

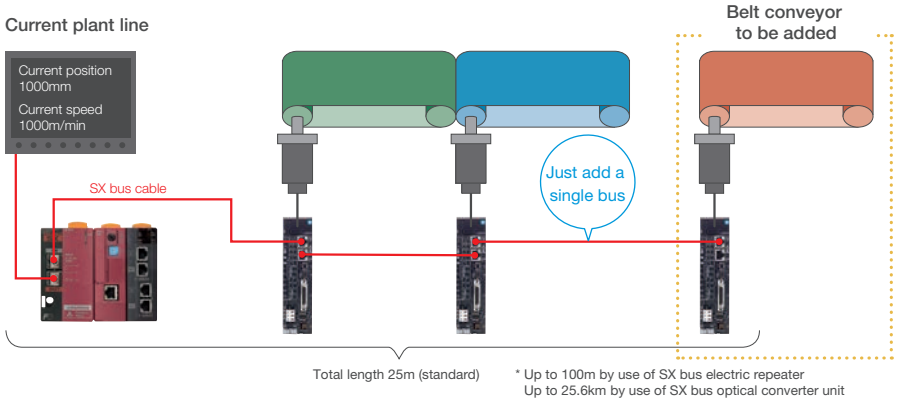

Broad range of functional software "FBs" raises development efficiency

Various software parts, FBs (function blocks), are available free of charge. By appropriately combining FBs, you can build a motion program for a large-scale system in a short time. If you have trouble in developing programs, consult Fuji for support.

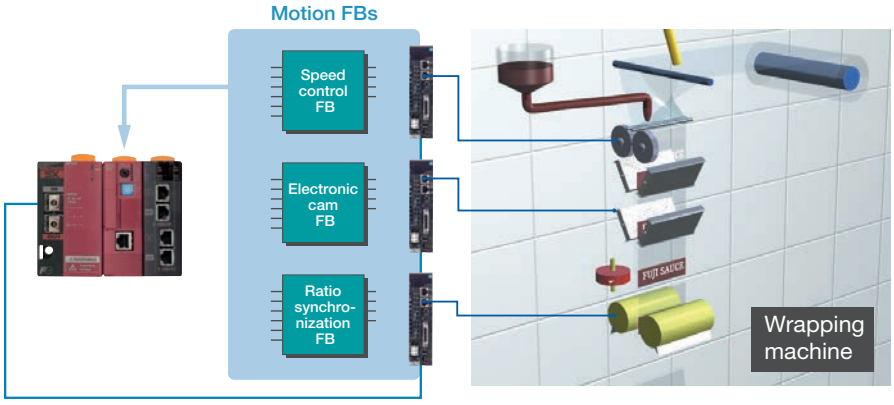

Various features that allow standalone use of ALPHA7

PC loader tuning allows easy semi-automatic adjustment

Automatic servo adjustment in tuningless mode

In tuningless mode, you do not have to manually adjust the responsiveness (gain) because the servo system automatically does so. You no longer spend time on tuning at start-up time.

Finer adjustment is possible in auto tuning mode

In auto tuning mode, the servo amplifier automatically adjust the responsiveness (gain). This mode allows finer control than tuningless mode.

Highest precision requirements can be achieved in manual tuning mode

This mode is intended for use with machines that require high precision. It allows you to optimize multiple parameters at once, enabling high responsiveness (gain) adjustment.

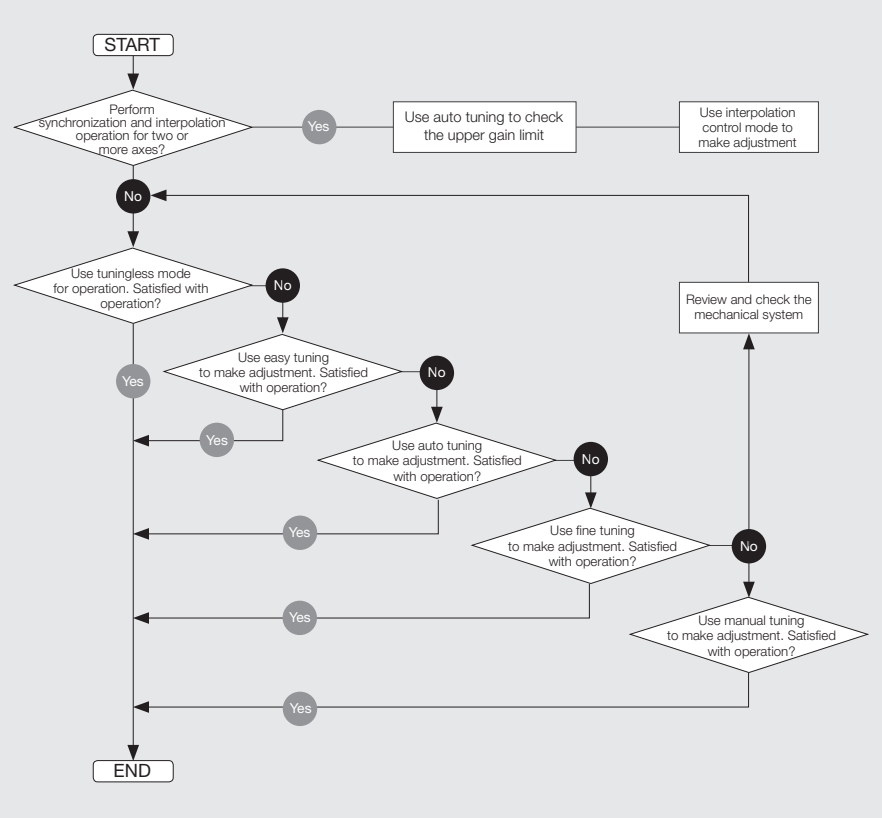

Features that reduce the time required to set up a newly introduced machine

Test-run the machine before completion of a program using the pattern run feature

You can adjust the machine and servo before completion of a program for the controller.

Test-run a program before completion of the machine using sequence mode

You can run a controller program before completion of the machine, so you can debug programs more efficiently.

Simplify your system using the built-in programmable positioning feature (applicable to the LS type only)

You can easily perform positioning run, using pre-registered positioning data. You can register positioning data for up to 31 points in VV type and up to 99 points in LS type. You can run the system by just selecting a program number and issuing a start command from the host controller. This feature is most useful for the purposes of inching and repetitive operations.

Evolved control functions contribute to streamlining of operation and stabilization of quality

New damping control suppresses the vibration at equipment edges

The introduction of a new control algorithm reduces the vibration at the edges of the equipment to one tenth, compared with the conventional damping control (used in our products). Support for models with three inertia systems makes it possible to control low-frequency vibrations at two points concurrently.

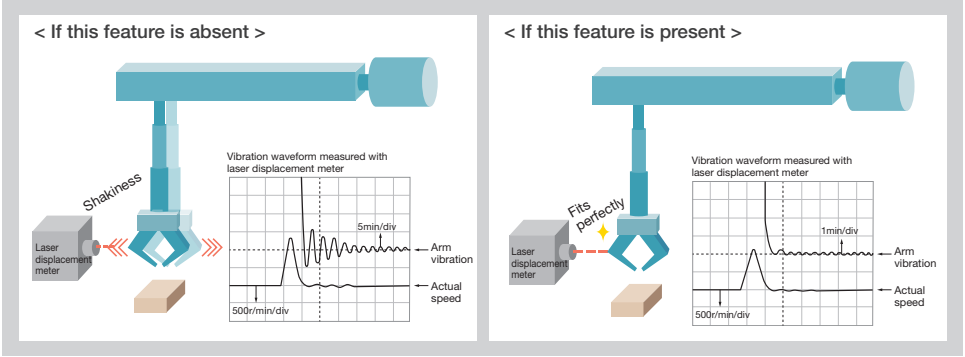

The interference detection feature detects a collision, etc. and prevents breakage

The servo amplifier detects interference on the equipment (such as a collision with an edge of the machine) and operates to mitigate the shock to the machine when a collision occurs. This feature helps prevent damage to the equipment and reduce load on it.

* Protection may not be complete depending on the operation type.

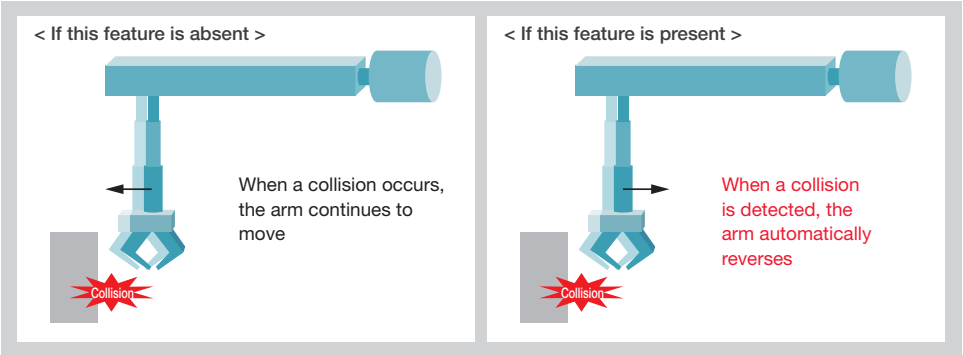

The cogging feature ensures smooth operation

Since interference due to cogging of the servomotor is detected and compensated, speed ripples due to cogging can be reduced and smooth operation can be ensured even if the equipment does not support the increase of the speed loop gain.

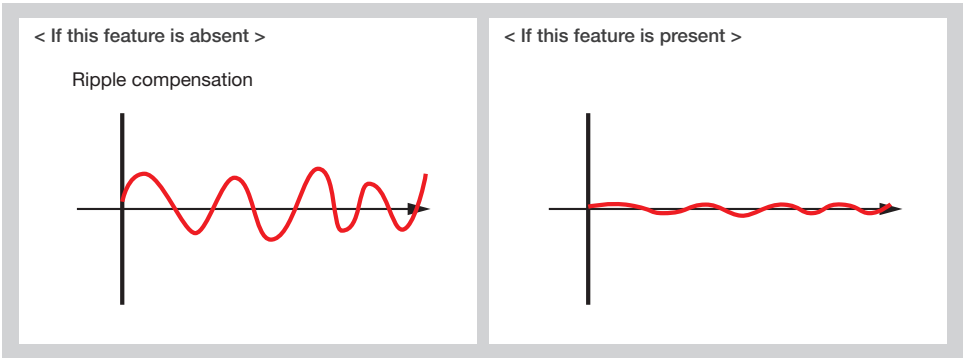

Maximum input pulse frequency of 4MHz

The system can support input frequencies from the host controller until the maximum frequency of 4MHz is reached.
This allows a finer amount of travel per pulse, thus enabling positioning operation at a higher precision than before.

- Differential input: Max. input frequency ≤ 4.0 [MHz]
- Open collector input: Max. input frequency ≤ 200 [kHz]

However, the VS type supports only the counter feature and it cannot support pulse train operation.

The notch filter feature suppresses the resonance of the machine

Now five notch filters are incorporated instead of two, further improving the machine resonance suppression feature.

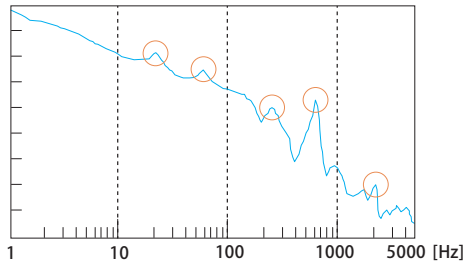

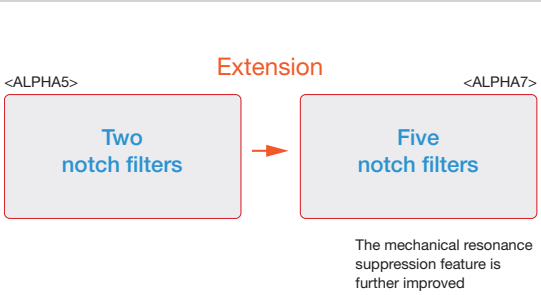

The motor status can be monitored from the host controller

The system detects machine resonance and automatically configures the notch filters. While the auto notch filter feature is on, the system constantly performs detection and calculation, thus being able to respond even to moment-to-moment changes in resonant frequency.

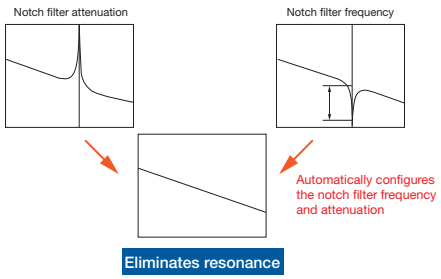

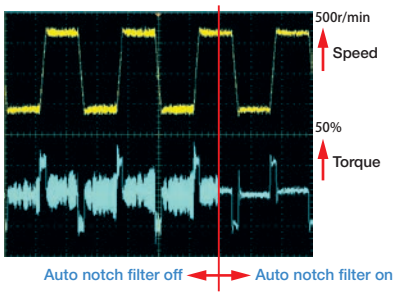

One of three motor stop methods can be selected

You can select "rapid deceleration stop", "DB stop", or "coast-to-stop" when an alarm occurs, when the main power is off, or when the servo-on signal is off. Since limiting output torque at desired value is possible even if rapid deceleration stop is selected, impact shock to the machine can be reduced.*

* However, it is enabled when the control power supply is input.

A homing program can be easily configured

Several homing features allow simple configuration by just combining servo parameters.

Interrupt positioning feature (except for EtherCAT type)

You can easily perform positioning run, using pre-registered positioning data. You can register positioning data for up to 31 points in VV type and up to 99 points in LS type. You can run the system by just selecting a program number and issuing a start command from the host controller. This feature is most useful for the purposes of inching and repetitive operations.

Full-closed control function (applicable to the VV, VC type only)

In addition to the position detection value of the motor encoder, position control can be performed using the position detection value of the external encoder connected to the edge of the machine.
Position control using the position of the edge of the machine allows for more precise control to be achieved.

Design and features that reduce the labor of maintenance

Easily analyze the cause of alarm occurrence

When an alarm occurs, the system displays the content of the alarm as well as related data such as the speed and torque at the time of alarm occurrence. This allows you to accurately analyze the cause of the alarm.

Life prediction and preventive maintenance features

You can check the status of the servomotor from the controller, so you can perform maintenance at appropriate time. In addition, the system predicts the life for the following consumables and sends the data to the host controller for proactive failure prevention.

Battery | Main circuit capacitor | Cooling fan

Long life design of servo amplifier parts

The design life of long-life parts has been further extended: 10 years for electrolytic capacitors and cooling fans. In addition, the design life of the battery is approximately 35,000 hours. (Retention time with the power supply shut off)

* The use conditions are as follows.
  - Ambient temperature: 30°C (annual average)
  - Load factor: Up to 80%
  - Rate of operation: Up to 20 hours/day

The environmentally resistant servo motor can be used in an environment with exposure to water and dust

The servomotor is by default compliant with IP67* defined by the International Electrotechnical Commission (IEC). It has Class 6 dust resistance and Class 7 water resistance, which means that it can be used in an environment with exposure to water and dust.

* Except for shaft-through part (also except connectors for GYS and GYB motors of lead wire type).

Space-saving design that allows installation in a small space

Most compact in the industry* Further miniaturized servomotor

The overall length of the servomotor has been reduced by approximately 15mm, compared with our existing products. This is the most advanced miniaturization in the industry.

* As of February 2017, for the GYB motor

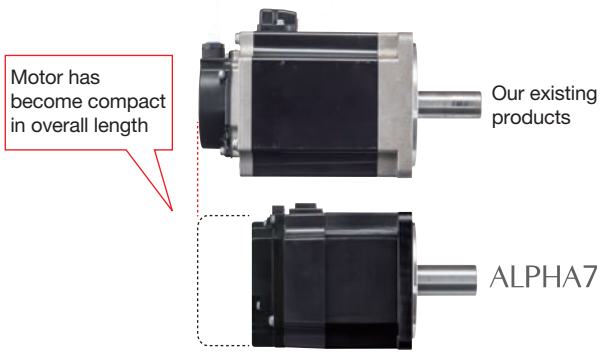

(In comparison with GYB 0.2kW)

Compact servo amplifier that can be mounted in close contact

The servo amplifier is reduced in width by 5mm and in footprint area by approximately 12%* when compared with our conventional model. It can be mounted in close contact, allowing the reduction of the space required to mount it on the control panel of the machine.



* When mounted in close contact, 80% ED rating applies. There is no restriction when installed at spacings of 5mm or greater.
* Comparison value with frame 1.

Compatibility

Compatible with ALPHA5 motors

ALPHA7 Series servo amplifiers can also power ALPHA5 Series motors (GYS5, GYC5, GYG5 (0.75 kW or less)).
For details on ALPHA5 Series motors, refer to “ALPHA5 Catalog 24C-1-E-0037”.

Parameter file conversion tool

The parameter files used in the ALPHA5 Series can be automatically converted to ALPHA7 Series parameters. The parameter file conversion tool is bundled with the ALPHA7 loader software.
The ALPHA7 loader software is available for free and can be downloaded from the Fe library.

Support for various standards is provided by default to allow for overseas business expansion

Compliance with overseas standards and laws

The ALPHA7 series supports international standards.

Standards and laws		Servo amplifier	Servomotor
CE mark	Low voltage directive	EN61800-5-1	
	EMC directive	EN61800-3	
	Machine directive	ENISO13849-1 Cat3.PL-e	Not applicable
		EN60204-1 Stop Category 0	
		EN61508 SIL3	
		EN61800-5-2 STO	
		EN62061 SIL CL3	
	Rotary electric machine	Not applicable	EN60034-1, 6
UL standards		UL61800-5-1	UL1004
China Compulsory Certificate (CCC) system		Not applicable	Not applicable
Korea Radio Act (KC)		Compliant	Not applicable

< Certification mark >

CE: Compliant with EU (European Union) standards

UL: Compliant with the U.S. safety standards

cUL: Certifies the compliance of UL with CSA (Canada safety standards)

TÜV SÜD: An independent certification organization based in Germany

TÜV Rheinland: An independent certification organization based in Germany

KC: Korea's nationally integrated certification mark

By default compliant with RoHS*1

Compliant with RoHS (EU's Restriction of Hazardous Substances) and China RoHS (Management Methods for Controlling Pollution by Electronic Information Products). Environment-friendly design that restricts the use of six hazardous substances*2.

RoHS directive compliance
EU's Restriction of Hazardous Substances

*1: EU's Restriction of Hazardous Substances

*2: Lead, mercury, cadmium, hexavalent chromium, polybrominated biphenyl (PBB), polybrominated diphenyl ether (PBDE)

Harmonic suppression

All models of servo amplifiers used by specific consumers are subject to the "Japanese Guideline for Suppressing Harmonics by Customers Receiving High Voltage or Special High Voltage". All users required to apply guidelines must calculate equivalent capacity as well as harmonic outflow current based on these guidelines, and take appropriate measures if the calculated harmonic current exceeds the limit stipulated for the contracted wattage.

Circuit classification	Circuit type	Reactor	Conversion factor
3	3-phase bridge (capacitor smoothing)	Not equipped	3.4
		Equipped (on AC side)	1.8
		Equipped (on DC side)	1.8
		Equipped (on AC and DC sides)	1.4
4	Single-phase bridge (capacitor smoothing)	Not equipped	2.9
		Equipped (on AC side)	1.3

For information on how to calculate the harmonic current, use the following as a reference.

Reference material: Japan Electrical Manufacturers' Association

- Pamphlet "About Servo Amplifier Harmonic Suppression"
- JEM-TR225 "Servo Amplifier Harmonic Current Calculation Method for Specific Consumers"

Fuji offers optimum solutions according to customer needs

01 Prober

Inspecting instrument used in semi-conductor manufacturing equipment

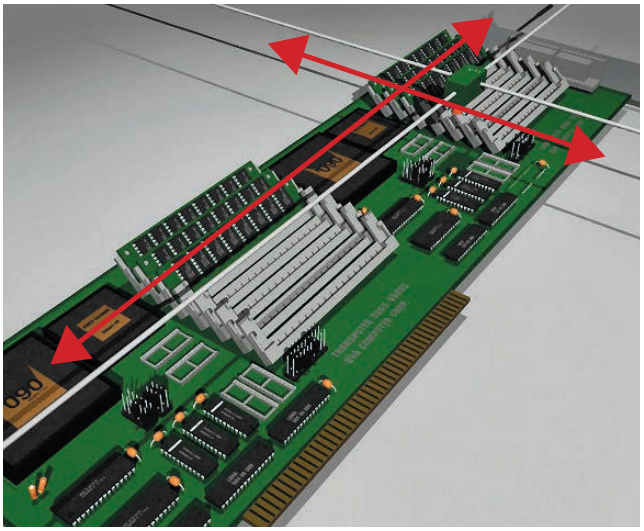

Solution 1	To improve productivity
	Fine tuning and feed forward gain
Solution 2	To reduce the vibrations of the machine
	Auto damping control and anti-resonant frequency for damping

02 Takeout robot

Used to take out formed products and convey workpieces

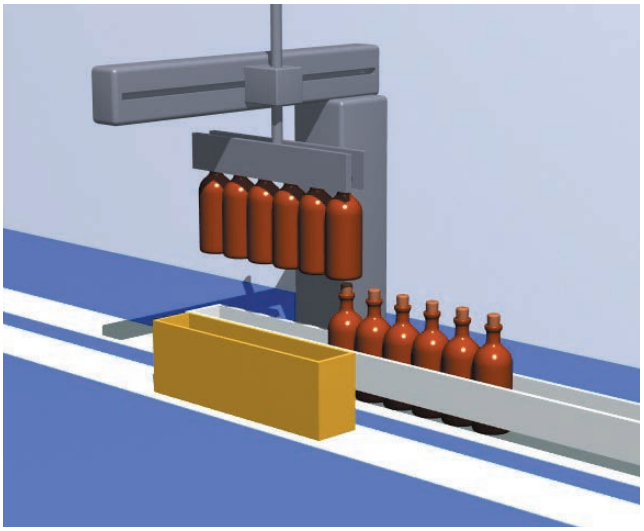

Solution 1	To reduce the vibrations of the machine
	Auto damping control and anti-resonant frequency for damping
Solution 2	To suppress the resonance of the machine
	Tuningless and notch filter features
Solution 3	To prevent objects from being caught in the machine
	Interference detection feature

03 Vertical wrapping machine

Used to fill or wrap food or chemical



Solution 1 To eliminate defective workpieces by synchronizing the feed, seal, and cut axes

Interpolation operation mode and feed forward control

Solution 2 To cut the material at the position of the reference mark

Enable interrupt input

04 Label wrapping machine

Used to wrap labels around bottles

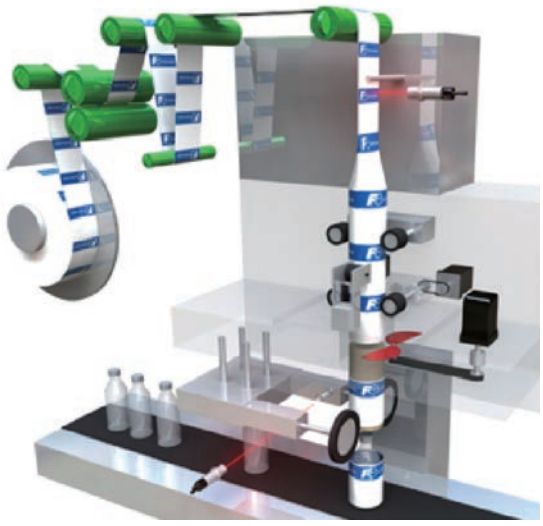

Solution 1 To improve productivity

Fine tuning and feed forward gain

Solution 2 To establish a safe system

Apply safety functions

Solution 3 To cut the material at the position of the reference mark

Enable interrupt input

Model Codes

Servo amplifier

RYT 2 0 1 F 7 - V V 2

Digit	Specification	Code
1	Basic type	
	ALPHA series	RYT
2	Capacity	
	50×10⁰=50W	500
	10×10¹=100W	101
	20×10¹=200W	201
	40×10¹=400W	401
	75×10¹=750W	751
	10×10²=1.0kW	102
	15×10²=1.5kW	152
	20×10²=2.0kW	202
	30×10²=3.0kW	302
	40×10²=4.0kW	402
	50×10²=5.0kW	502
3	Rated speed	
	1500 to 3000r/min series	F
4	Development order	
	7	7
5	Major functions	
	SX bus (Position, speed and torque control)	VS
	SX bus (Built-in positioning function)	LS
	EtherCAT	VC
	General-purpose interface (Pulse, analog, positioning)	VV
6	Input voltage	
	3-phase 200V	2

Servomotor

GYS 5 0 0 D 7 - E B 2 - B

Digit	Specification	Code
1	Basic type	
	Ultra-low Inertia	GYS
	Medium Inertia	GYB
	Medium Inertia	GYG
2	Rated output	
	50×10⁰=50W	500
	10×10¹=100W	101
	20×10¹=200W	201
	40×10¹=400W	401
	75×10¹=750W	751
	85×10¹=850W	851
	10×10²=1.0kW	102
	13×10²=1.3kW	132
	15×10²=1.5kW	152
	18×10²=1.8kW	182
	20×10²=2.0kW	202
	30×10²=3.0kW	302
	40×10²=4.0kW	402
	50×10²=5.0kW	502
3	Rated speed	
	3000r/min series	D
	2000r/min series	C
	1500r/min series	B
4	Development order	
	7	7
5	Encoder	
	24-bit ABS (with support for functional safety)	E
	24-bit INC (with support for functional safety)	N
6	Oil seal/shaft *1	
	Without oil seal, straight shaft, with key	A
	Without oil seal, straight shaft, without key	B
	Without oil seal, straight shaft, with key, tapped	C
	With oil seal, straight shaft, with key	E
	With oil seal, straight shaft, without key	F
	With oil seal, straight shaft, with key, tapped	G
7	Input voltage	
	3-phase 200V	2
8	Wire connection/brake	
	Lead wire, without brake	No marking
	Lead wire, with brake	B
	Connector, without brake	C
	Connector, with brake	D

*1: GYS motor with key is not tapped for 0.1kW or less, and tapped for 0.2kW or more.
*2: For details on how to read the nomenclature for ALPHA5 Series motors, refer to “Catalog 24C1-E-0037”.

Specifications: Servo Amplifier

Amplifier type		RYT □□□F7-△△2	500	101	201	401	751	102	152	202	302	402	502
Outer frame number			Frame 1				Frame 2			Frame 3		Frame 4	
Mass [kg]			0.9	0.9	0.9	0.9	1.5	1.5	1.5	2.5	2.5	3.8	3.8
Protective construction/cooling			Open/natural cooling				Open/mechanical cooling						
Power supply	Main power supply	Phases	Single-phase, 3-phase					3-phase					
		Voltage/frequency	200 to 240VAC, 50/60Hz										
		Allowable voltage fluctuation	3-phase: 170 to 264VAC, Single-phase: 190 to 264VAC										
	Control power supply	Phases	Single-phase										
		Voltage/frequency	200 to 240VAC 50/60Hz										
		Allowable voltage fluctuation	170 to 264VAC										
Control system			Fully-digital sinusoidal PWM drive										
Carrier frequency			10 [kHz]							5 [kHz]			
Overload capability			Overload capability varies from motor to motor										
Max voltage for regenerative resistance [W]	Built-in resistor		-	-	-	8	20	20	20	30	30	60	60
	External resistor*1		17	17	17	17	50	50	50	260	260	300	300
Dynamic brake			Built-in*2										
Feedback			Absolute 24-bit serial encoder, incremental 24-bit serial encoder										
Speed fluctuation ratio*3	Load fluctuation		Within ± 0.01% (load fluctuation 0 to 100% at rated operation speed)										
	Power supply fluctuation		0% (power supply fluctuation -10 to +10% at rated operation speed)										
	Temperature fluctuation		Within ± 0.2% (25 ± 10°C at rated operation speed when an analog voltage command is issued)										
Performance/features	VS type	Speed control	Closed-loop control, acceleration/deceleration time setting, manual feed speed/maximum rotation speed adjustment, etc. by using a speed regulator										
		Position control	Closed-loop control, electronic gear, output pulse setting, feed forward, homing, interrupt positioning, etc. by using a position regulator										
		Torque control	Closed-loop control (proportional open-loop control for current and torque), torque limiting, speed limiting during torque control, etc. by using a current regulator										
		Ancillary features	Easy tuning, pattern run, sequence test mode, auto tuning, auto notch filter, vibration suppression control online learning, etc.										
	LS type	Position control	Auto start, manual run, pulse train, homing										
		Number of position data points	99 points (position, speed, stop timer, M code output, and various statuses)										
		Maximum position specification	±2,000,000,000										
		Position specification method	Absolute/incremental										
		Ancillary features	Easy tuning, pattern run, sequence test mode, auto tuning, auto notch filter, vibration suppression control online learning, etc.										
	VV type	Speed control	Closed-loop control, acceleration/deceleration time setting, manual feed speed/maximum rotation speed adjustment, speed command zero clamping, etc. by using a speed regulator										
		Number of position data points	31 points (position, speed, acceleration time, deceleration time, stop timer, M code output, and various statuses)										
		Position control	Closed-loop control, electronic gear, output pulse setting, feed forward, homing, interrupt positioning, auto start, etc. by using a position regulator										
		Torque control	Closed-loop control (proportional open-loop control for current and torque), torque limiting, speed limiting during torque control, etc. by using a current regulator										
		Ancillary features	Easy tuning, pattern run, sequence test mode, auto tuning, auto notch filter, vibration suppression control online learning, etc.										
	VC type	Speed control	Closed-loop control, acceleration/deceleration time setting, manual feed speed/maximum rotation speed adjustment, etc. by using a speed regulator										
		Position control	Closed-loop control, electronic gear, output pulse setting, feed forward, homing, interrupt positioning, etc. by using a position regulator										
		Torque control	Closed-loop control (proportional open-loop control for current and torque), torque limiting, speed limiting during torque control, etc. by using a current regulator										
		Ancillary features	Easy tuning, pattern run, sequence test mode, auto tuning, auto notch filter, vibration suppression control online learning, etc.										
Protective features (Alarm display)	VS/LS/VV type		Over Current (OC1, OC2), Over Speed (OS), Low Control Voltage (LvC), Overvoltage (Hv), Encoder Trouble (Et1, Et2), Memory Error (dE), Motor Combination Error (CE), Encoder Communication Error (EC), CONT (Control signal) Error (CtE), Over Load (OL1, OL2, OL3), Power Low Voltage (LvP), Regenerative Resistor Overheat (rH1, rH2), Regenerative Transistor Error (rH3), Inrush Current Suppressing Circuit Error (rH4), Deviation Overflow (oF), Amplifier Overheat (AH), Encoder Overheat (EH), Absolute Data Lost (dL1, dL2, dL3), Multi-turn Data Over Flow (AF), Initial Error (IE), Command Pulse Frequency Error (HF),Functional Safety Error (EcF)										
	VC type		Overvoltage (OC01, OC02), Over Speed (OS), Low Control Voltage (LvCn), Overvoltage (Hv), Encoder Trouble (Et01, Et02), Memory Error (dE), Motor Combination Error (CE), Encoder Communication Error (EC), CONT (Control signal) Error, Over Load (OL01, OL02, OL03), Power Low Voltage (LvPo), Regenerative Resistor Overheat (rH01, rH02), Regenerative Transistor Error (rH03), Inrush Current Suppressing Circuit Error (rH04), Deviation Overflow (oF), Amplifier Overheat (AH), Encoder Overheat (EH), Absolute Data Lost (dL01, dL02, dL03), Multi-turn Data Over Flow (AF), Initial Error (IE),Command Pulse Frequency Error (HF), Functional Safety Error (SFty), EtherCAT Communication Error (CY) * If the message is four-digit, two digits of the message alternately appear at a time on the 7-segment LED.										
Operation and display section of main body	VS/LS/VV type		5-digit alphanumeric display with 7-segment LED 4 operation switches (MODE, UP, DOWN, and SET)										
	VC type		2-digit alphanumeric display with 7-segment LED Rotary switch										
Working conditions	Installation place		Indoors at altitude ≤ 1000m, free from dust, corrosive gases and direct sunlight In case of compliance with UL/CE marking: Pollution Degree=2 Over Voltage Category=III										
	Temperature/humidity/ atmospheric pressure		-10 to 55°C/10 to 90%RH (without condensation)/70 to 106kPa										
	Vibration/shock resistance		Vibration resistance: 3mm: < 2 to 9Hz 9.8m/s^2: < 9 to 20Hz 2m/s^2: < 20 to 55Hz 1m/s^2: < 55 to 200Hz Shock resistance: 19.6m/s^2 (2G)										
Standards			UL standard: UL61800-5-1 CE marking Low voltage directive: EN61800-5-1 EMC directive: EN61800-3 Machinery directive: EN ISO13849-1 EN60204-1 EN61508 SIL3 EN61800-5-2 SIL3 (STO) EN62061 SIL CL3										
Control function	Frequency response		3,200Hz										
	Tuning features		Auto tuning, semi-auto tuning, interpolation control mode, manual tuning										
	Auto adjustment features		Tuningless features, easy tuning, fine tuning										
	Notch filter		5-step										
	Damping control		2-step (number of steps that can be configured at the same time)										
	Compensation features		Friction compensation, interference detection, cogging torque compensation										
	Full-closed control*4		External-scale based Full-closed control function, Full-closed control "enable/disable" switching function										

*1: This value assumes that the external resistor dedicated to each amplifier is connected.

*2: We will accept custom orders for models without a dynamic brake.

*3: This value represents the average value of the speed fluctuation that is generated from static load fluctuation, power supply fluctuation, and temperature fluctuation as the percentage to the rated rotation speed.

*4: VV/VC type

Specifications: VS and LS Type Servo Amplifiers

Outline of System Configuration

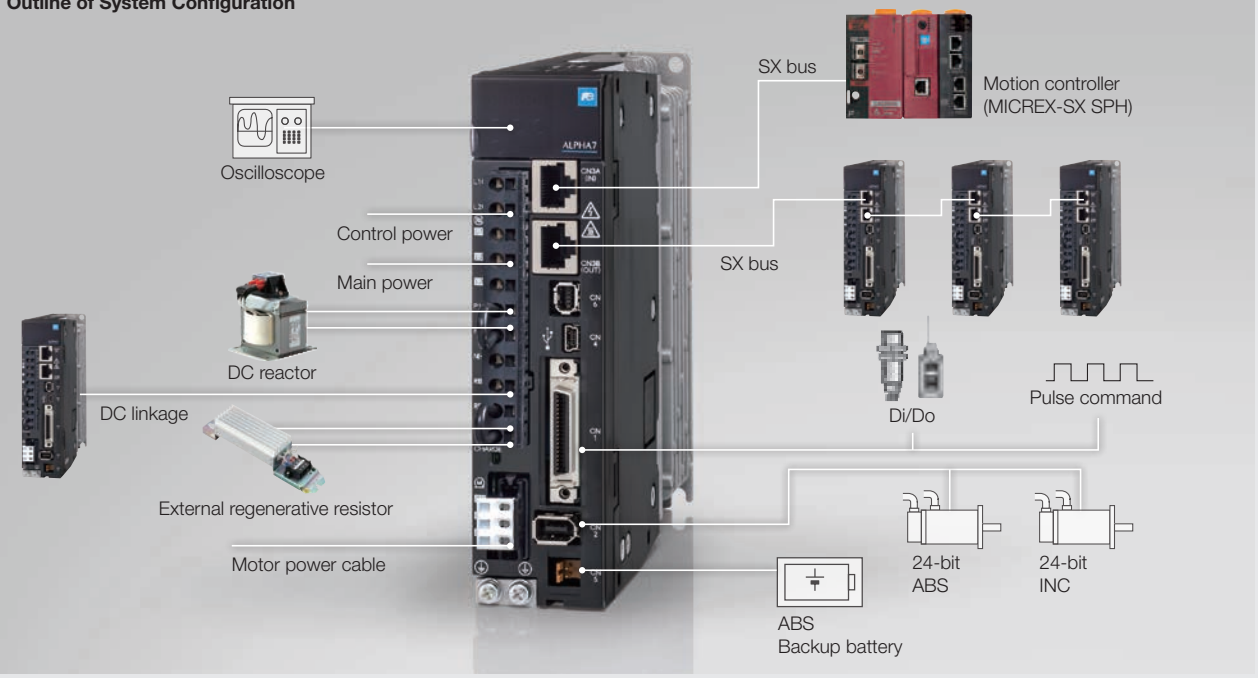

Interface specifications

Interface type		Specifications
Command interface	Position control	SX bus: IQ area
	Speed control	
	Torque control	
Communication interface		SX bus (for command interface, parameter editing, and monitoring)
		Our original protocol
		25Mbps, connection of max. 32 axes

Terminal name	Symbol	Specifications
Pulse input VS: For pulse counter LS: For position control	CA, *CA CB, *CB	Differential input: Max. input frequency ≤ 4.0MHz Open collector input: Max. input frequency ≤ 200kHz (In case of signals at 90-degree phase difference, the above relationship is true for the four-fold frequency.) Pulse format { Command pulse/Command direction; Forward/Reverse pulse; Two signals at 90-degree phase difference } Select one of these formats with a parameter setting
	PPI	Pull-up power input at open collector input (24VDC ± 10%)
Pulse output	FFA, *FFA FFB, *FFB	Differential output: Max. output frequency ≤ 500kHz Two signals at 90-degree phase difference Pulse output count setting (n pulses/rev): 16 ≤ n ≤ 4194304
	FFZ, *FFZ	Differential output: 1 pulse/rev
	FZ	Open collector output: 1 pulse/rev
	M5	Reference potential (0V)
Analog monitor voltage output	MON1 MON2	0V to ±10VDC Resolution: 14 bits / ± full scale The output data depends on the internal parameter
	M5	Reference potential (0V)
Common for sequence I/O	COMIN	Common for sequence input signal
	COMOUT	Common for sequence output signal
Sequence input signal	CONT1 to CONT5	ON upon short circuit across contacts, OFF upon open circuit 12VDC-10% to 24VDC+10% Current consumption 8mA (per contact; used at circuit voltage 24VDC) Function of each signal depends on parameter setting Compatible with both sink and source input methods
Sequence output signal	OUT1 to OUT2	Short circuit upon ON, open circuit upon OFF 30VDC / 50mA (max.) Function of each signal depends on parameter setting Compatible with both sink and source output methods

Specifications: VV Type Servo Amplifier

Outline of System Configuration

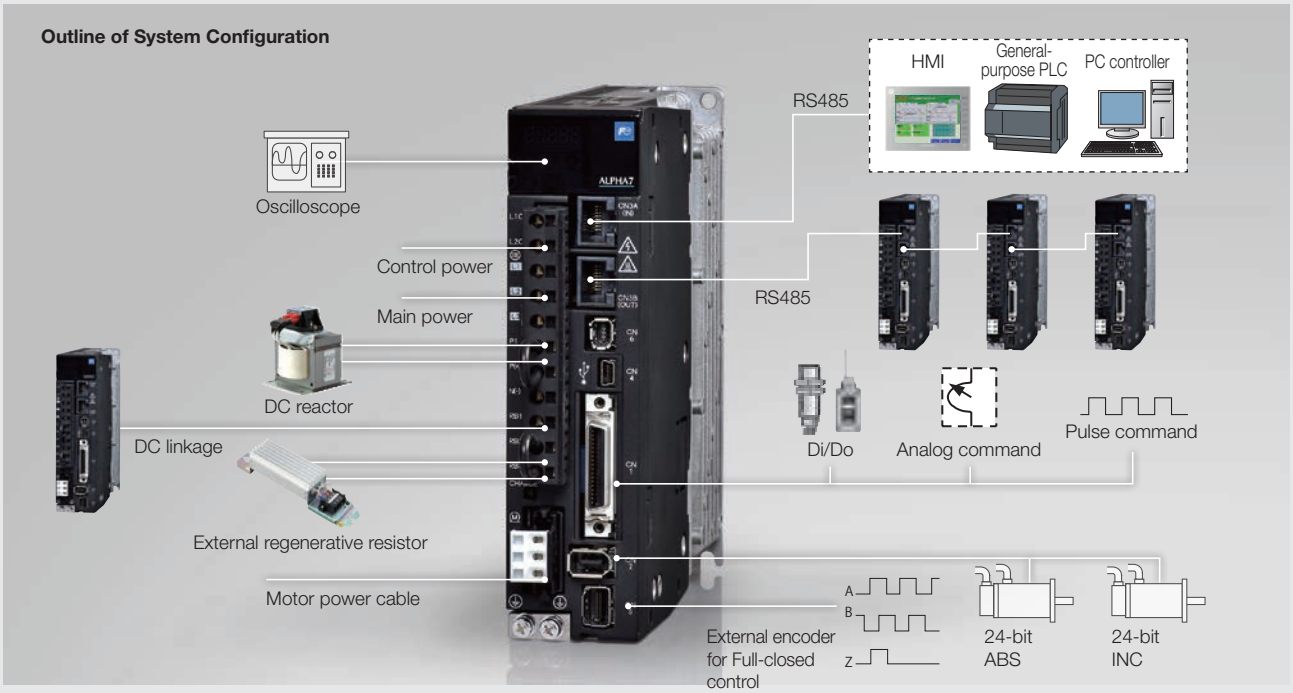

Interface specifications

Interface type		Specifications
Command interface	Positioning feature	RS-485 (Modbus-RTU), Di/Do
	Position control	Pulse command
	Speed control	Analog voltage input
	Torque control	Analog voltage input
Communication interface		Dual RS-485 ports (for parameter editing and monitoring)
		Our original protocol, Modbus-RTU
		9600/19200/38400/115200 bps, connection of max. 31 axes
External encoder connection for Full-closed control	CN5	Compatible with ABZ pulse encoder

Terminal name	Symbol	Specifications
Pulse input Also used for CONT signal	CA, *CA CB, *CB	Differential input: Max. input frequency ≤ 4.0MHz Open collector input: Max. input frequency ≤ 200kHz (In case of signals at 90-degree phase difference, the above relationship is true for the four-fold frequency.) Pulse format { Command pulse/Command direction; Forward/Reverse pulse; Two signals at 90-degree phase difference } Select with parameters from here.
		CA,*CA: CONT CA signal, CB,*CB: CONT CB signal, compatible with both sink input and source input
	PPI	Pull-up power input at open collector input (24VDC ± 10%)
Pulse output Also used for OUT signal	FFA, *FFA FFB, *FFB	Differential output: Max. output frequency ≤ 1.0MHz Two signals at 90-degree phase difference Pulse output count setting (n pulses/rev): 16 ≤ n ≤ 4194304
	FFZ, *FFZ	Differential output: 1 pulse/rev
	FZ	Open collector output 1pulse/rev, FZ: OUT FZ signal
	M5	Reference potential (0V)
Analog monitor voltage output	MON1 MON2	0V to ±10VDC Resolution: 14 bits / ± full scale The output data depends on the internal parameter
	M5	Reference potential (0V)
Common for sequence I/O	COMIN	Common for sequence input signal
	COMOUT	Common for sequence output signal
Sequence input signal	CONT1 to CONT8	ON upon short circuit across contacts, OFF upon open circuit 12VDC-10% to 24VDC+10% Current consumption 8mA (per contact; used at circuit voltage 24VDC) Function of each signal depends on parameter setting Compatible with both sink and source input methods
Sequence output signal	OUT1 to OUT5	Short circuit upon ON, open circuit upon OFF 30VDC / 50mA (max.) Function of each signal depends on parameter setting Compatible with both sink and source output methods
Analog voltage input	VREF	Speed command entry when performing speed control Valid range: -10V to 0 to +10V, input impedance: 20 kΩ Resolution: 16 bits / ± full scale
	TREF	Torque command entry when performing torque control Valid range: -10V to 0 to +10V, input impedance: 20 kΩ Resolution: 16 bits / ± full scale
	P10	Analog command power output (+10VDC), output capacity 30mA
	M5	Reference potential (0V)

Specifications: VC Type Servo Amplifier

Outline of System Configuration

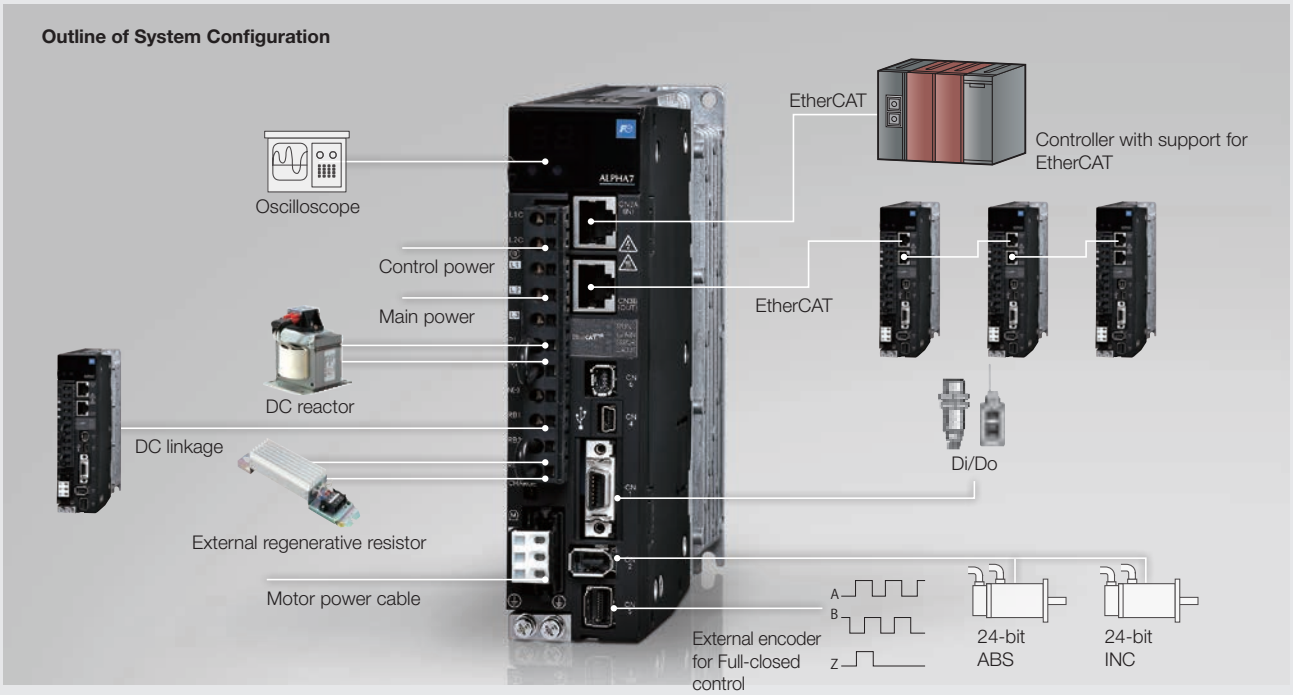

Interface specifications

Interface type		Specifications
Command interface	Position control	EtherCAT CiA402 drive profile
	Speed control	
	Torque control	
Communication interface		EtherCAT (for command interface, parameter editing, and monitoring)
		Can application over EtherCAT
		100Mbps
External encoder connection for Full-closed control	CN5	Compatible with ABZ pulse encoder

EtherCAT communication specifications

Item		Specifications
Physical layer		100Base-TX[IEEE802.3]
Baud rate		100Mbps(Full duplex)
Topology		Line
Communication cable		Twist pair cable CAT5e
Communication distance		Node-to-node distance: Max. 100 m
Number of slaves		65535 * The number of slaves that can be controlled with PDO is limited depending on the communication cycle and data length.
Communication port		2 ports (RJ45 connectors)
Station alias		Setting range: 0-65535
Device profile		CAN application over EtherCAT
Cia402 drive profile		pp: Profile position mode
		pv: Profile velocity mode
		hm: Homing mode
		csp: Cyclic synchronous position mode
		csv: Cyclic synchronous velocity mode
		cst: Cyclic synchronous torque mode
Touch probe		Supported (two inputs)
Synchronization method	Synchronous mode	DC: Distribute clock
		SM2: Cyclic PDO communication
	Asynchronous mode	Free RUN
Communication cycle		125[µs], 250[µs], 500[µs], 1000[µs], 2000[µs], 4000[µs]
Communication form		SDO, PDO
SDO message		Normal Request, Normal Response
Free PDO Mapping		Supported *Only the objects defined to be supportable in our specifications
Maximum PDO data count		4x16 [Entry/PDO] (RxPDO) + 4x16 [Entry/PDO] (TxPDO)
Maximum PDO data length		128 [bytes] (Rx PDO) + 128 [bytes] (Tx PDO)

Terminal name	Symbol	Specifications
Analog monitor voltage output	MON1 MON2	0V to ±10VDC Resolution: 14 bits / ± full scale The output data depends on the internal parameter
	M5	Reference potential (0V)
Common for sequence I/O	COMIN	Common for sequence input signal
	COMOUT	Common for sequence output signal
Sequence input signal	CONT1 to CONT6	ON upon short circuit across contacts, OFF upon open circuit 12VDC-10% to 24VDC+10% Current consumption 8mA (per contact; used at circuit voltage 24VDC) Function of each signal depends on parameter setting Compatible with both sink and source input methods
Sequence output signal	OUT1 to OUT2	Short circuit upon ON, open circuit upon OFF 30VDC / 50mA (max.) Function of each signal depends on parameter setting Compatible with both sink and source output methods

Connection diagram for reference: VS and LS type Servo Amplifiers (Frame 1)

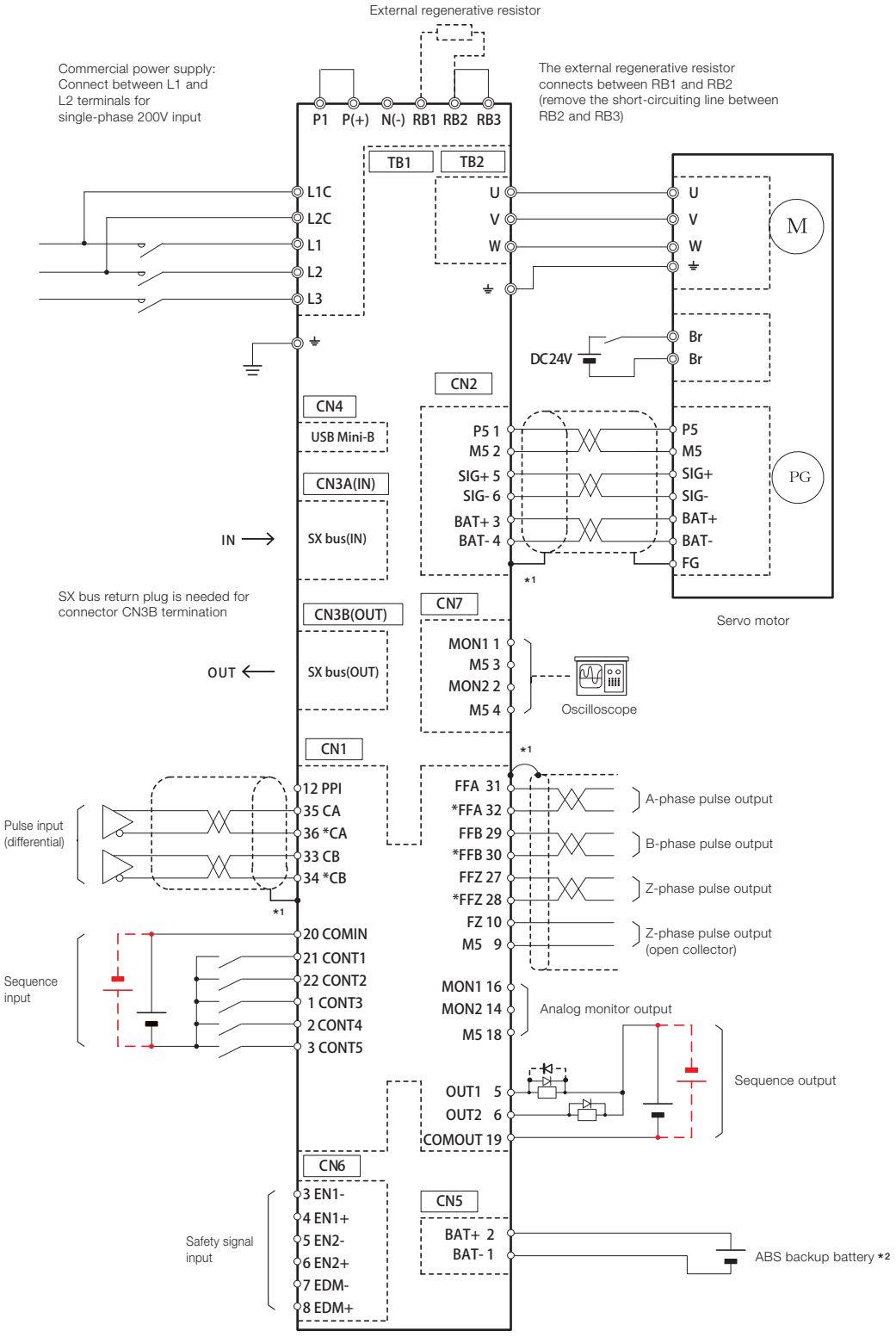

*1: The shielded wire on the servo amplifier side connects to the connector shell.
*2: When using the encoder cable with the battery, remove the battery for ABS backup of CN5.

The diagram shown above is intended as a reference for model selection.
When actually using the selected servo system, make wiring connections according to the connection diagram and instructions described in the user's manual.

Connection diagram for reference: VV Type Servo Amplifier (Frame 1)

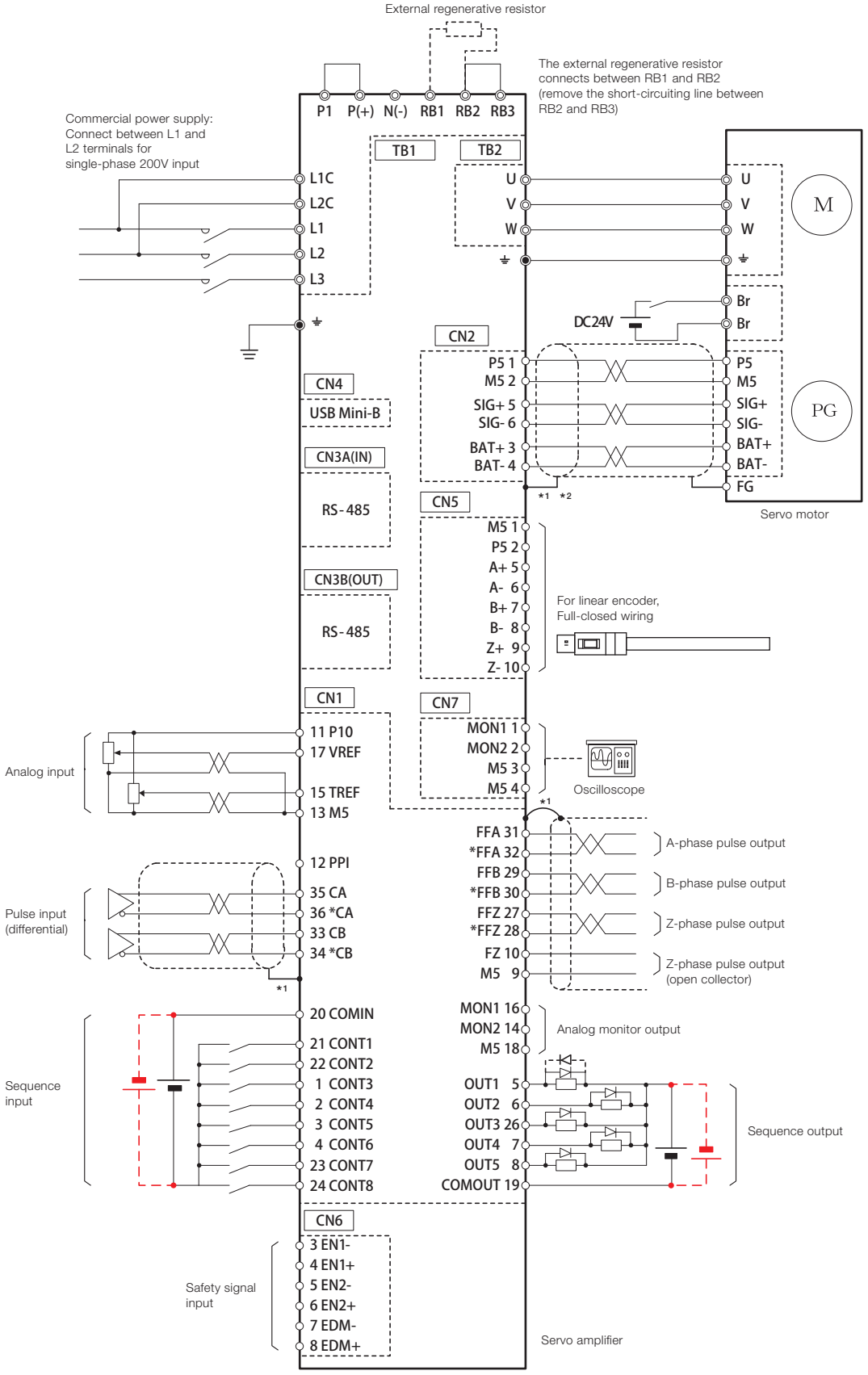

*1: The shielded wire on the servo amplifier side connects to the connector shell.
*2: To connect an ABS encoder, use an encoder cable with a battery.

The diagram shown above is intended as a reference for model selection.
When actually using the selected servo system, make wiring connections according to the connection diagram and instructions described in the user's manual.

Connection diagram for reference: VC Type Servo Amplifier (Frame 1)

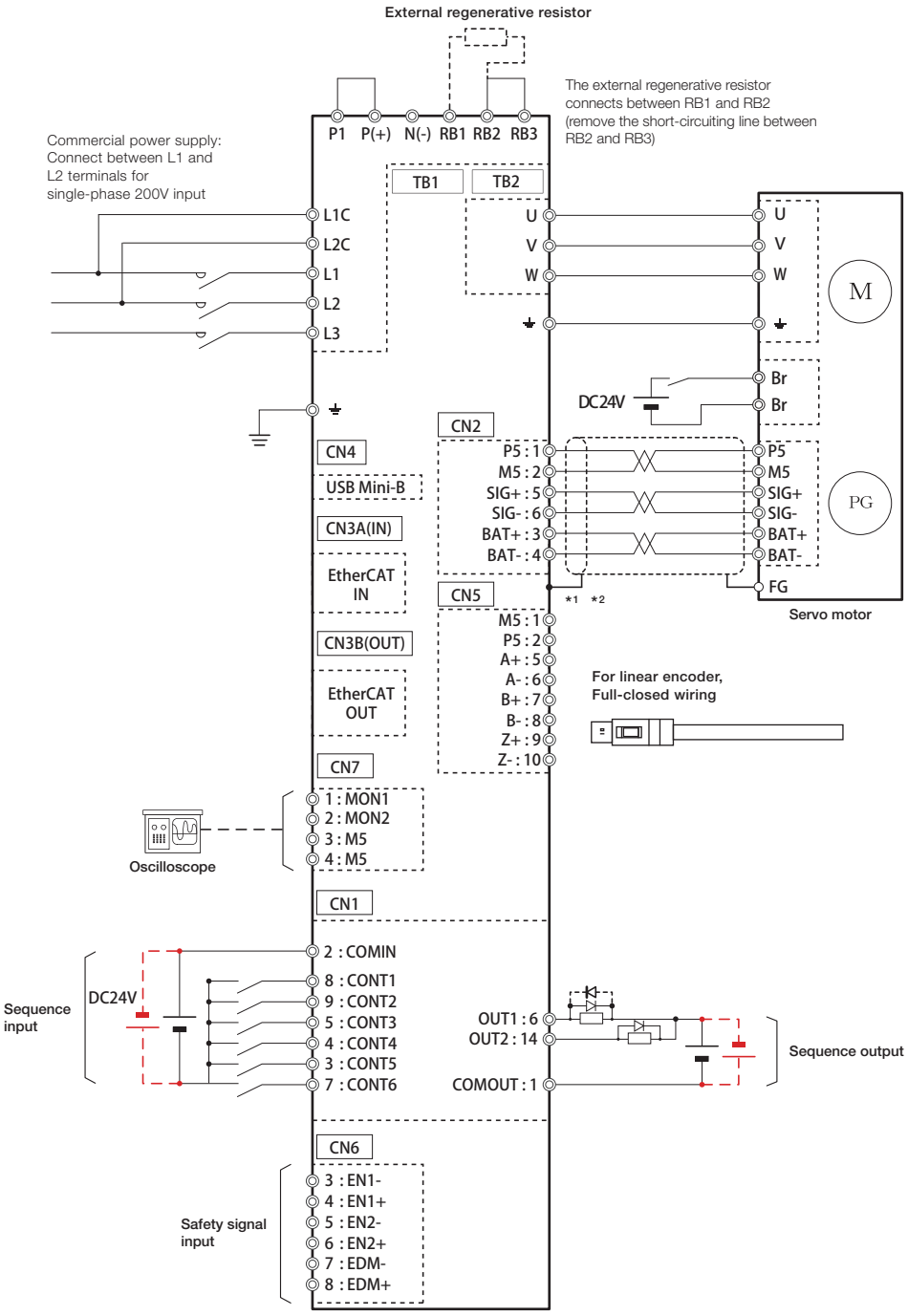

*1: The shielded wire on the servo amplifier side connects to the connector shell.
*2: To connect an ABS encoder, use an encoder cable with a battery.

The diagram shown above is intended as a reference for model selection.
When actually using the selected servo system, make wiring connections according to the connection diagram and instructions described in the user's manual.

Servomotor specifications: GYS motor

Standard specifications

Motor type	GYS500D7 -□□2	GYS101D7 -□□2	GYS201D7 -□□2	GYS401D7 -□□2	GYS751D7 -□□2
Rated output [kW]	0.05	0.1	0.2	0.4	0.75
Rated torque [N·m]	0.159	0.318	0.637	1.27	2.39
Rated speed [r/min]	3000				
Max. speed [r/min]	6000				
Max. torque [N·m]	0.478	0.955	1.91	3.82	7.17
Inertia [kg·m^2]	0.0192×10^{-4}	0.0371×10^{-4}	0.135×10^{-4}	0.246×10^{-4}	0.853×10^{-4}
Rated current [A]	0.85	0.85	1.5	2.7	4.8
Max. current [A]	2.55	2.55	4.5	8.1	14.4
Winding insulation class	Class B				
Degree of enclosure protection	Totally enclosed, self-cooled (IP 67, excluding the shaft sealing and connectors)*1				
Terminals (motor)	Cable 0.3m (with connector)				
Terminals (encoder)	Cable 0.3m (with connector)				
Overheat protection	Not provided (The servo amplifier detects temperature.)				
Mounting method	By securing motor flange IMB5 (L51), IMV1 (L52), IMV3 (L53)				
Encoder	24-bit serial encoder (absolute/incremental)				
Vibration level*2	V5 or below				
Installation place, environment	For indoor use (free from direct sunlight), locations without corrosive and flammable gases, oil mist and dust				
Altitude	Altitude ≤ 1000m				
Ambient temperature, humidity	-10 to +40°C (without freezing), within 90% RH max. (without condensation)				
Vibration resistance [m/s^2]	49				
Mass [kg]	0.45	0.55	1.2	1.8	3.4
Standards	UL/cUL (UL1004), CE marking (EN60034-1, EN60034-6), RoHS directive				

*1: When using the product under such an environment as specified in IP67, make sure that the connector for wiring is compatible with IP67.
*2: The vibration value is the property of flange type IMV1 (L52).

Brake specifications (motor equipped with a brake)

Motor type	GYS500D7 -□□2-B	GYS101D7 -□□2-B	GYS201D7 -□□2-B	GYS401D7 -□□2-B	GYS751D7 -□□2-B
Rated output [kW]	0.05	0.1	0.2	0.4	0.75
Rated torque [N·m]	0.159	0.318	0.637	1.27	2.39
Inertia [kg·m^2]	0.0223×10^{-4}	0.0402×10^{-4}	0.159×10^{-4}	0.270×10^{-4}	0.949×10^{-4}
Static friction torque [N·m]	0.34		1.27		2.45
Rated DC voltage [V]	24VDC ± 10%				
Attraction time [ms]	35		40		60
Release time [ms]	10		20		25
Power consumption [W]	6.1 (at 20°C)		7.3 (at 20°C)		8.5 (at 20°C)
Mass [kg]	0.62	0.72	1.7	2.3	4.2

Torque characteristics diagrams (at 3-phase 200V or single-phase 230V source voltage)

GYS500D7-□□2	GYS101D7-□□2	GYS201D7-□□2	GYS401D7-□□2	GYS751D7-□□2
0.05kW	0.1kW	0.2kW	0.4kW	0.75kW

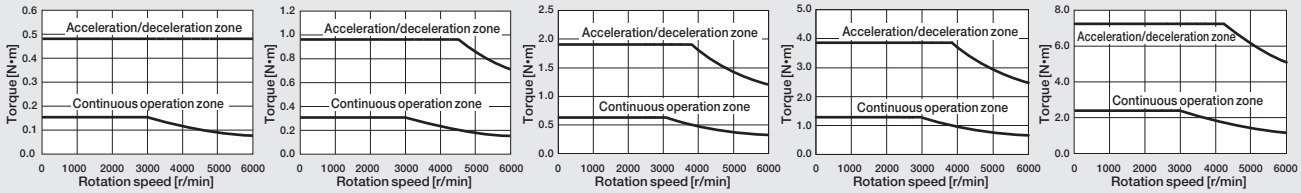

These characteristics indicate typical values of each servomotor combined with the corresponding RYT-7 type servo amplifier.
The rated torque indicates the value obtained when the servo amplifier is installed to the following aluminum heat sink.
- Model GYS500D, 101D: 200 x 200 x 6 [mm]
- Model GYS201D, 401D: 250 x 250 x 6 [mm]
- Model GYS751: 300 x 300 x 6 [mm]

Servomotor specifications: GYS motor

Standard specifications

Motor type	GYS102D7 -□□2	GYS152D7 -□□2	GYS202D7 -□□2	GYS302D7 -□□2	GYS402D7 -□□2	GYS502D7 -□□2
Rated output [kW]	1.0	1.5	2.0	3.0	4.0	5.0
Rated torque [N·m]	3.18	4.78	6.37	9.55	12.7	15.9
Rated speed [r/min]	3000					
Max. speed [r/min]	5000					
Max. torque [N·m]	9.55	14.3	19.1	28.7	38.2	47.8
Inertia [kg·m²]	1.73×10^{-4}	2.37×10^{-4}	3.01×10^{-4}	8.32×10^{-4}	10.8×10^{-4}	12.8×10^{-4}
Rated current [A]	7.1	9.6	12.6	18.0	24.0	30.0
Max. current [A]	21.3	28.8	37.8	54.0	72.0	90.0
Winding insulation class	Class F					
Degree of enclosure protection	Totally enclosed, self-cooled (IP 67, excluding the shaft sealing)*1					
Terminals (motor)	Cannon connector					
Terminals (encoder)	Cannon connector					
Overheat protection	Not provided (The servo amplifier detects temperature.)					
Mounting method	By securing motor flange IMB5 (L51), IMV1 (L52), IMV3 (L53)					
Encoder	24-bit serial encoder (absolute/incremental)					
Vibration level*2	Up to rated rotation speed: V10 or below Over rated rotation speed and up to 5000r/min: V15 or below					
Installation place, environment	For indoor use (free from direct sunlight), locations without corrosive and flammable gases, oil mist and dust					
Altitude	Altitude ≤ 1000m					
Ambient temperature, humidity	-10 to +40°C (without freezing), within 90% RH max. (without condensation)					
Vibration resistance [m/s²]	24.5					
Mass [kg]	4.4	5.2	6.3	11.0	13.5	16.0
Standards	UL/cUL (UL1004), CE marking (EN60034-1, EN60034-6), RoHS directive					

*1: When using the product under such an environment as specified in IP67, make sure that the connector for wiring is compatible with IP67.
*2: The vibration value is the property of flange type IMV1 (L52).

Brake specifications (motor equipped with a brake)

Motor type	GYS102D7 -□□2-B	GYS152D7 -□□2-B	GYS202D7 -□□2-B	GYS302D7 -□□2-B	GYS402D7 -□□2-B	GYS502D7 -□□2-B
Rated output [kW]	1.0	1.5	2.0	3.0	4.0	5.0
Rated torque [N·m]	3.18	4.78	6.37	9.55	12.7	15.9
Inertia [kg·m²]	2.03×10^{-4}	2.67×10^{-4}	3.31×10^{-4}	10.42×10^{-4}	12.9×10^{-4}	14.9×10^{-4}
Static friction torque [N·m]	6.86			17		
Rated DC voltage [V]	24VDC ± 10%					
Attraction time [ms]	100			120		
Release time [ms]	40			30		
Power consumption [W]	17.7 (at 20°C)			12 (at 20°C)		
Mass [kg]	5.9	6.8	7.9	13.0	15.5	18.0

Torque characteristics diagrams (at 3-phase 200V or single-phase 230V source voltage)

GYS102D7-□□2	GYS152D7-□□2	GYS202D7-□□2	GYS302D7-□□2	GYS402D7-□□2	GYS502D7-□□2
1.0kW	1.5kW	2.0kW	3.0kW	4.0kW	5.0kW

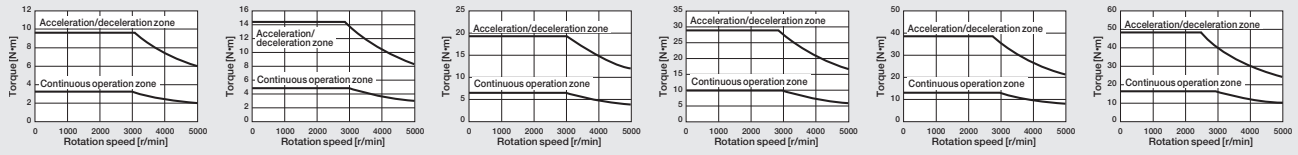

These characteristics indicate typical values of each servomotor combined with the corresponding RYT-7 type servo amplifier.
The rated torque indicates the value obtained when the servo amplifier is installed to the following aluminum heat sink.
- Model GYS102D, 152D, 202D: 350 × 350 × 8 [mm]
- Model GYB302D, 402D, 502D: 400 × 400 × 12 [mm]

Servomotor specifications: GYB motor

Standard specifications

Motor type	GYB201D7-□□2-□	GYB401D7-□□2-□	GYB751D7-□□2-□
Rated output [kW]	0.2	0.4	0.75
Rated torque [N·m]	0.637	1.27	2.39
Rated speed [r/min]	3000		
Max. speed [r/min]	6000		
Max. torque [N·m]	2.23	4.46	8.36
Inertia [kg·m²]	0.33×10^{-4}	0.57×10^{-4}	1.53×10^{-4}
Rated current [A]	1.4	2.7	4.9
Max. current [A]	6.0	12.0	18.0
Winding insulation class	Class B		
Degree of enclosure protection	Totally enclosed, self-cooled (IP 67, excluding the shaft sealing and lead wire connectors)*		
Terminals (motor)	Connector (lead wire)		
Terminals (encoder)	Connector (lead wire)		
Overheat protection	Not provided (The servo amplifier detects temperature.)		
Mounting method	By securing motor flange IMB5 (L51), IMV1 (L52), IMV3 (L53)		
Encoder	24-bit serial encoder (absolute/incremental)		
Vibration level	V5 or below		
Installation place, environment	For indoor use (free from direct sunlight), locations without corrosive and flammable gases, oil mist and dust		
Altitude	Altitude ≤ 1000m		
Ambient temperature, humidity	-10 to +40°C (without freezing), within 90% RH max. (without condensation)		
Vibration resistance [m/s²]	49		
Mass [kg]	0.9	1.2	2.3
Standards	UL/cUL (UL1004), CE marking (EN60034-1, EN60034-6), RoHS directive		

* When using the product under such an environment as specified in IP67, make sure that the connector for wiring is compatible with IP67.

Brake specifications (motor equipped with a brake)

Motor type	GYB201D7-□□2-□	GYB401D7-□□2-□	GYB751D7-□□2-□
Rated output [kW]	0.2	0.4	0.75
Rated torque [N·m]	0.637	1.27	2.39
Inertia [kg·m²]	0.37×10^{-4}	0.62×10^{-4}	1.71×10^{-4}
Static friction torque [N·m]	1.5		3.0
Rated DC voltage [V]	24VDC ± 10%		
Attraction time [ms]	40		60
Release time [ms]	20		20
Power consumption [W]	7.2 (at 20°C)		8.5 (at 20°C)
Mass [kg]	1.3	1.8	3.2

Torque characteristics diagrams (at 3-phase 200V or single-phase 230V source voltage)

GYB201D7-□□2-□	GYB401D7-□□2-□	GYB751D7-□□2-□
0.2kW	0.4kW	0.75kW

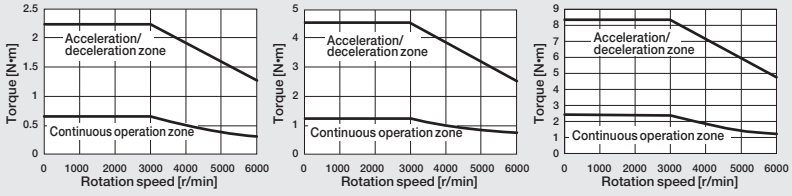

These characteristics indicate typical values of each servomotor combined with the corresponding RYT-7 type servo amplifier.
The rated torque indicates the value obtained when the servo amplifier is installed to the following aluminum heat sink.

- Model GYB201D, 401D: 250 x 250 x 6 [mm]
- Model GYB751D: 300 x 300 x 6 [mm]

Servomotor specifications: GYG motor

Standard specifications

Motor type	GYG102C7-□□2	GYG152C7-□□2	GYG202C7-□□2	GYG851B7-□□2	GYG132B7-□□2	GYG182B7-□□2
Rated output [kW]	1.0	1.5	2.0	0.85	1.3	1.8
Rated torque [N·m]	4.77	7.16	9.55	5.41	8.28	11.5
Rated speed [r/min]	2000			1500		
Max. speed [r/min]	3000					
Max. torque [N·m]	14.3	21.5	28.6	16.2	24.8	28.6
Inertia [kg·m^2]	11.8×10^{-4}	17.8×10^{-4}	27.1×10^{-4}	11.8×10^{-4}	17.8×10^{-4}	27.1×10^{-4}
Rated current [A]	4.7	8.9	11.0	5.4	10.1	13.1
Max. current [A]	18.0	30.0	37.0	22.0	37.0	37.0
Winding insulation class	Class F					
Rated	Continuous rating					
Degree of enclosure protection	Totally enclosed, self-cooled (IP 67, excluding the shaft sealing)*					
Terminals (motor)	Cannon connector					
Terminals (encoder)	Cannon connector					
Overheat protection	Not provided (The servo amplifier detects temperature.)					
Mounting method	By securing motor flange IMB5 (L51), IMV1 (L52), IMV3 (L53)					
Finishing color	N1.5					
Encoder	24-bit serial encoder (absolute/incremental)					
Vibration level	V10 or below					
Installation place, environment	For indoor use (free from direct sunlight), locations without corrosive and flammable gases, oil mist and dust					
Altitude	Altitude ≤ 1000m					
Ambient temperature, humidity	-10 to +40°C (without freezing), within 90% RH max. (without condensation)					
Vibration resistance [m/s^2]	24.5					
Mass [kg]	5.6	7.3	9.8	5.6	7.3	9.8
Standards	UL/cUL (UL1004), CE marking (EN60034-1, EN60034-6), RoHS directive					

* When using the product under such an environment as specified in IP67, make sure that the connector for wiring is compatible with IP67.

Brake specifications (motor equipped with a brake)

Motor type	GYG102C7-□□2-B	GYG152C7-□□2-B	GYG202C7-□□2	GYG851B7-□□2-B	GYG132B7-□□2-B	GYG182B7-□□2
Rated output [kW]	1.0	1.5	2.0	0.85	1.3	1.8
Rated torque [N·m]	4.77	7.16	9.55	5.41	8.28	11.5
Inertia [kg·m^2]	13.8×10^{-4}	19.8×10^{-4}	29.1×10^{-4}	13.8×10^{-4}	19.8×10^{-4}	29.1×10^{-4}
Static friction torque [N·m]	17					
Rated DC voltage [V]	24VDC ± 10%					
Attraction time [ms]	120					
Release time [ms]	30					
Power consumption [W]	12 (at 20°C)					
Mass [kg]	7.8	9.5	12.1	7.8	9.5	12.1

Torque characteristics diagrams (at 3-phase 200V or single-phase 230V source voltage)

GYG102C7-□□2	GYG152C7-□□2	GYG202C7-□□2	GYG851B7-□□2	GYG132B7-□□2	GYG182B7-□□2
1.0kW	1.5kW	2.0kW	0.85kW	1.3kW	1.8kW

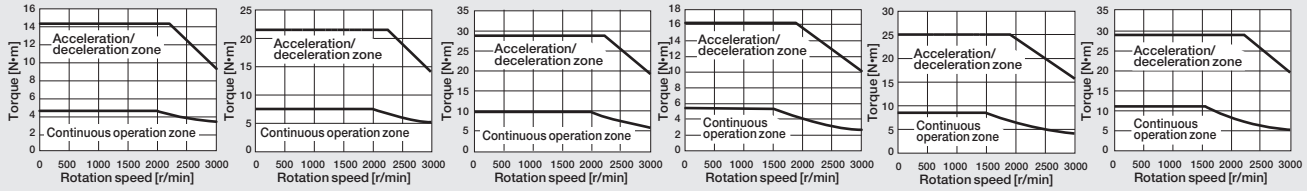

These characteristics indicate typical values of each servomotor combined with the corresponding RYT-7 type servo amplifier.
The rated torque indicates the value obtained when the servo amplifier is installed to the following aluminum heat sink.

- Model GYG102C/Model GYG851B: 300 × 300 × 12 [mm]
- Model GYG202C/Model GYG152C/Model GYG182B/Model GYG132B: 400 × 400 × 12 [mm]

External Dimensions: Servo Amplifier

VS/LS Types

Frame 1

Unit: mm

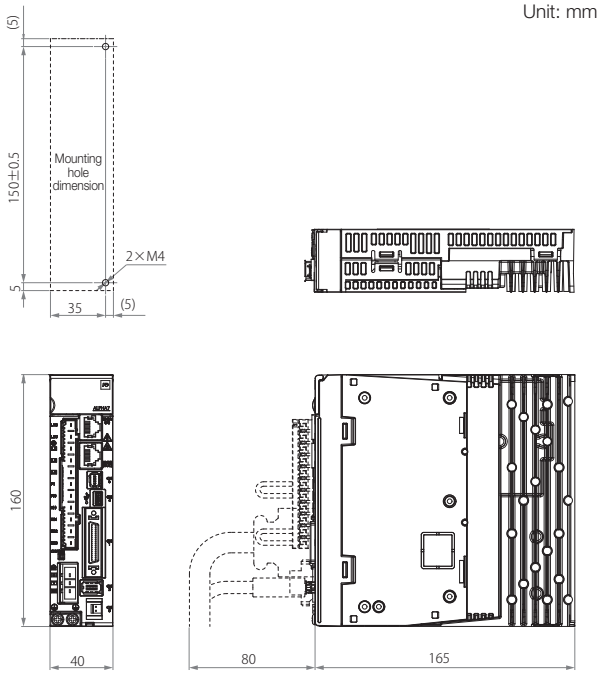

Power supply	Capacity	Type	Mass [kg]
200V series	0.05kW	RYT500F7-□S2	0.9
	0.1kW	RYT101F7-□S2	
	0.2kW	RYT201F7-□S2	
	0.4kW	RYT401F7-□S2	

Frame 2

Unit: mm

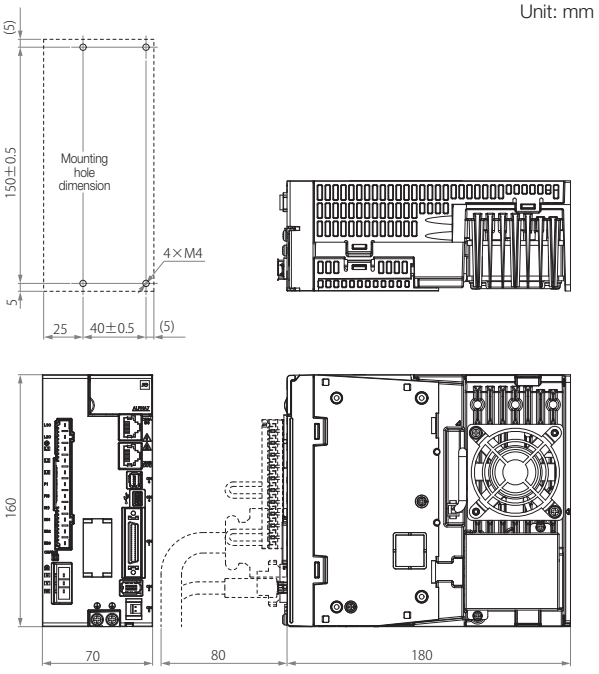

Power supply	Capacity	Type	Mass [kg]
200V series	0.75kW	RYT751F7-□S2	1.5
	1.0kW	RYT102F7-□S2	
	1.5kW	RYT152F7-□S2	

Frame 3

Unit: mm

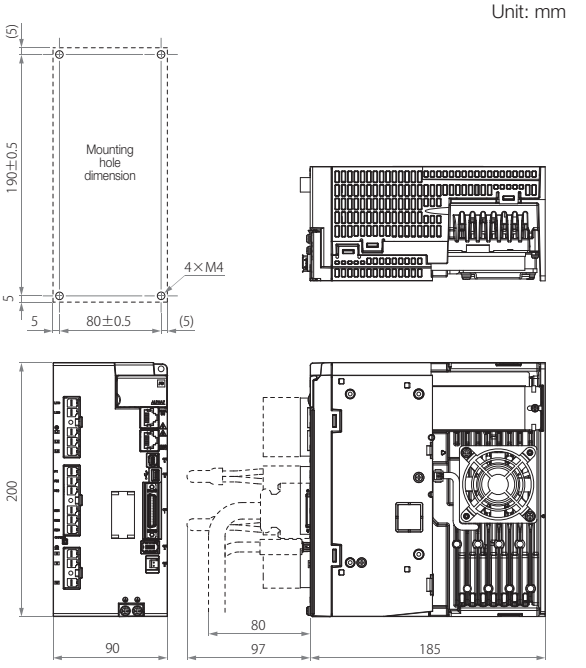

Power supply	Capacity	Type	Mass [kg]
200V series	2.0kW	RYT202F7-□S2	2.5
	3.0kW	RYT302F7-□S2	

Frame 4

Unit: mm

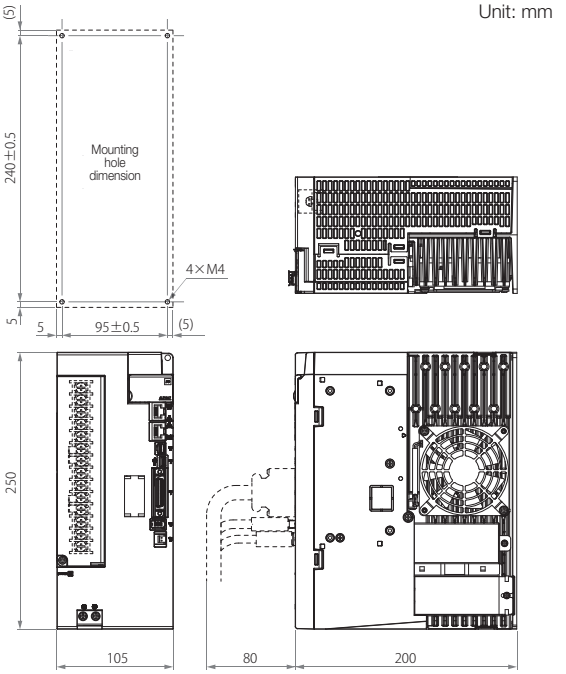

Power supply	Capacity	Type	Mass [kg]
200V series	4.0kW	RYT402F7-□S2	3.8
	5.0kW	RYT502F7-□S2	

External Dimensions: Servo Amplifier

VV Type

Frame 1

Unit: mm

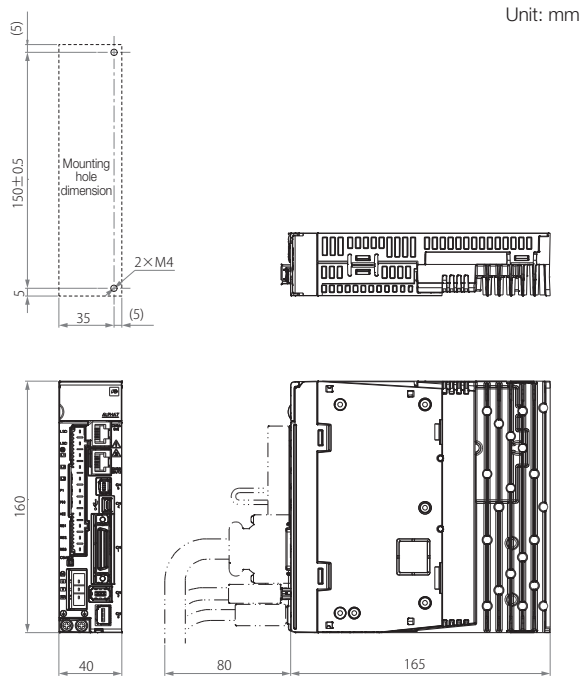

Power supply	Capacity	Type	Mass [kg]
200V series	0.05kW	RYT500F7-VV2	0.9
	0.1kW	RYT101F7-VV2	
	0.2kW	RYT201F7-VV2	
	0.4kW	RYT401F7-VV2	

Frame 2

Unit: mm

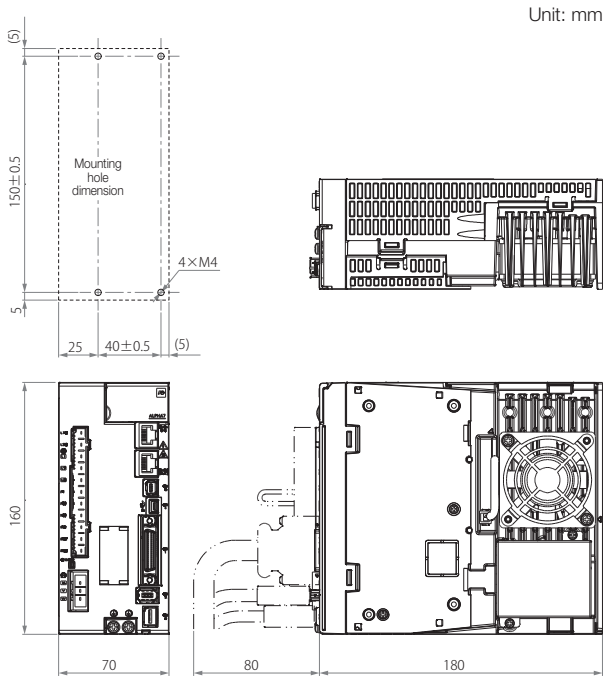

Power supply	Capacity	Type	Mass [kg]
200V series	0.75kW	RYT751F7-VV2	1.5
	1.0kW	RYT102F7-VV2	
	1.5kW	RYT152F7-VV2	

Frame 3

Unit: mm

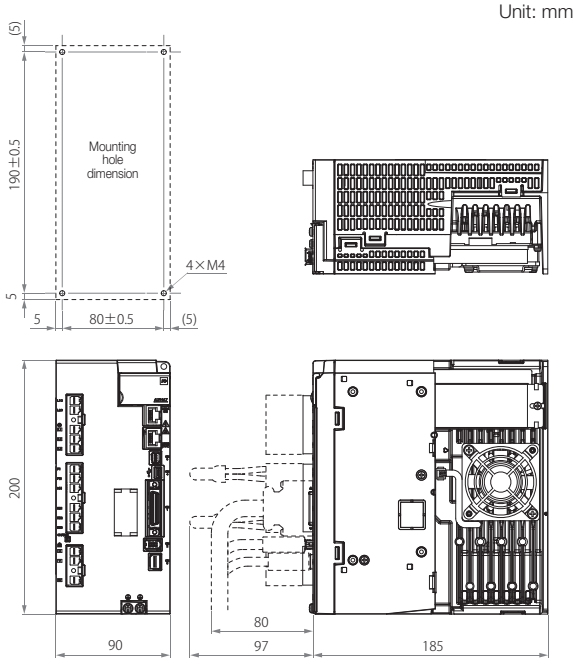

Power supply	Capacity	Type	Mass [kg]
200V series	2.0kW	RYT202F7-VV2	2.5
	3.0kW	RYT302F7-VV2	

Frame 4

Unit: mm

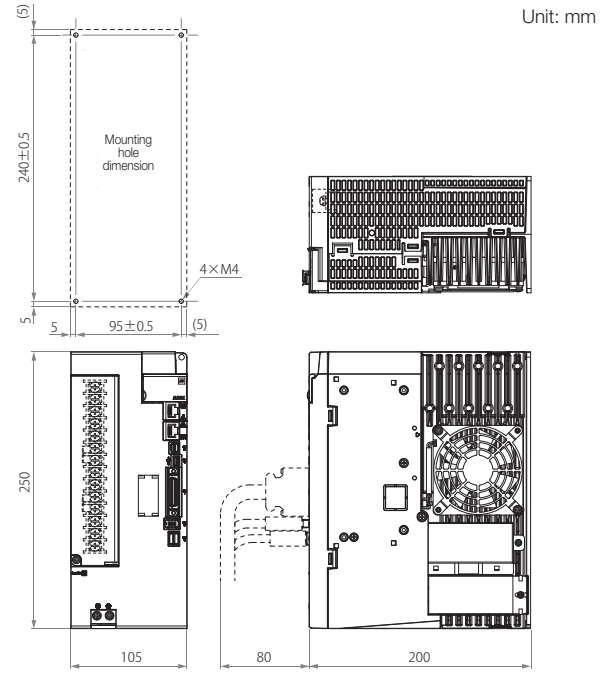

Power supply	Capacity	Type	Mass [kg]
200V series	4.0kW	RYT402F7-VV2	3.8
	5.0kW	RYT502F7-VV2	

External Dimensions: Servo Amplifier

VC Type

Frame 1

Unit: mm

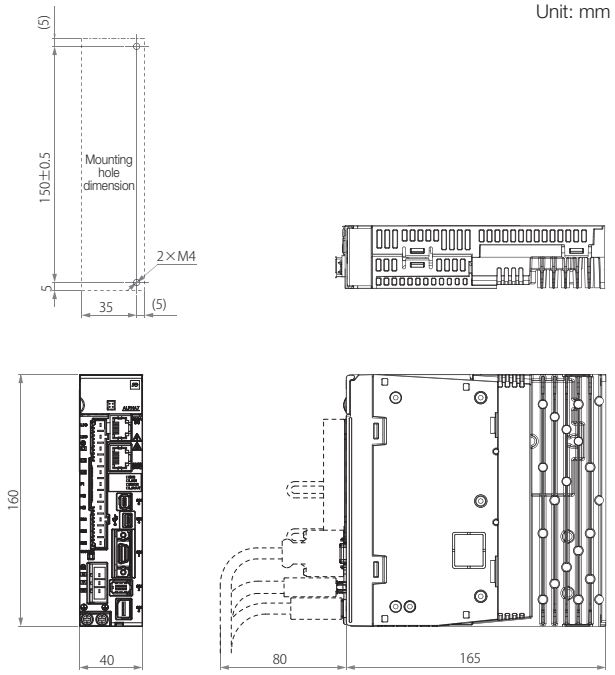

Power supply	Capacity	Type	Mass [kg]
200V series	0.05kW	RYT500F7-VC2	0.9
	0.1kW	RYT101F7-VC2	
	0.2kW	RYT201F7-VC2	
	0.4kW	RYT401F7-VC2	

Frame 2

Unit: mm

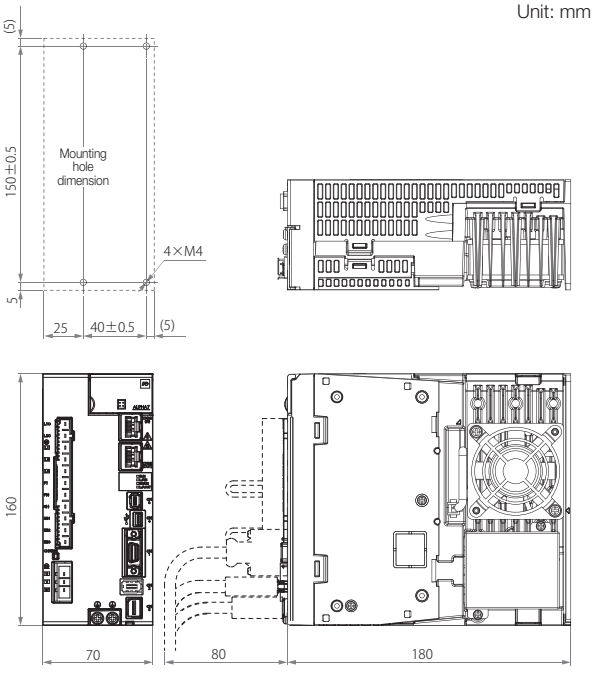

Power supply	Capacity	Type	Mass [kg]
200V series	0.75kW	RYT751F7-VC2	1.5
	1.0kW	RYT102F7-VC2	
	1.5kW	RYT152F7-VC2	

Frame 3

Unit: mm

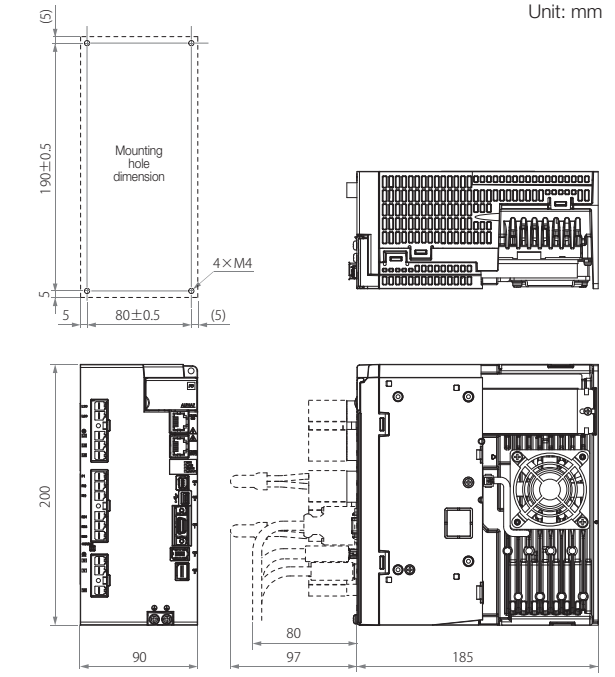

Power supply	Capacity	Type	Mass [kg]
200V series	2.0kW	RYT202F7-VC2	2.5
	3.0kW	RYT302F7-VC2	

Frame 4

Unit: mm

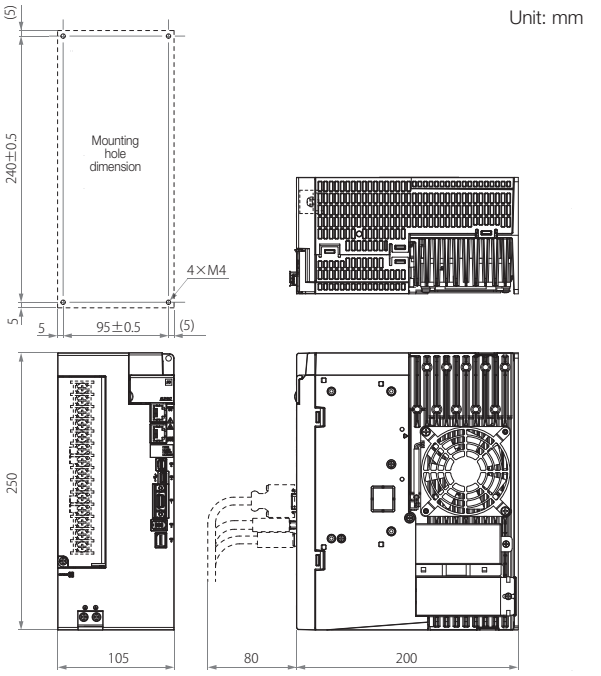

Power supply	Capacity	Type	Mass [kg]
200V series	4.0kW	RYT402F7-VC2	3.8
	5.0kW	RYT502F7-VC2	

External Dimensions: GYS Motor

GYS motor (without brake)

Unit: mm

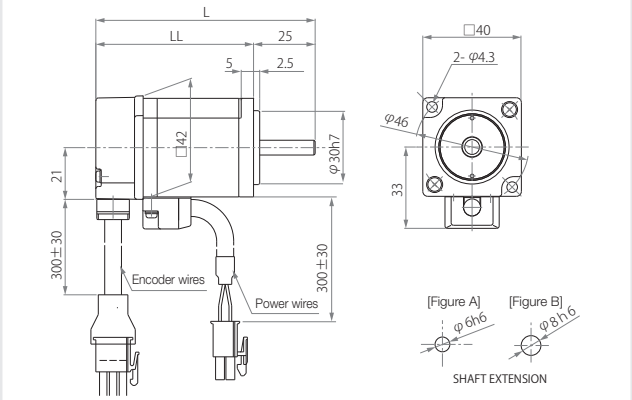

Rated speed	Applicable motor rated output	Type	Shaft shape	Overall length L	Dimensions (Flange) LL	Mass [kg]
3000r/min	0.05kW	GYS500D7-□B2	Figure A	89	64	0.45
	0.1kW	GYS101D7-□B2	Figure B	107	82	0.55

GYS motor (without brake)

Unit: mm

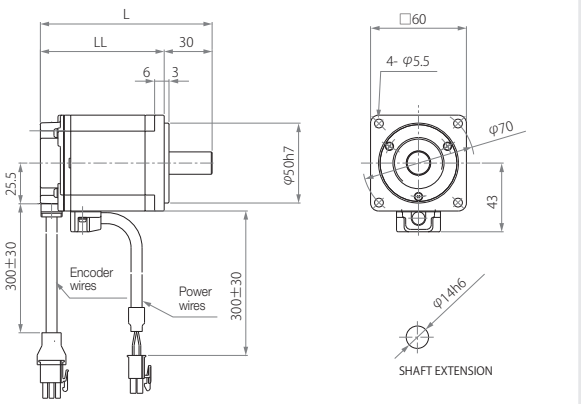

Rated speed	Applicable motor rated output	Type	Overall length L	Dimensions (Flange) LL	Mass [kg]
3000r/min	0.2kW	GYS201D7-□B2	107.5	77.5	1.2
	0.4kW	GYS401D7-□B2	135.5	105.5	1.8

GYS motor (without brake)

Unit: mm

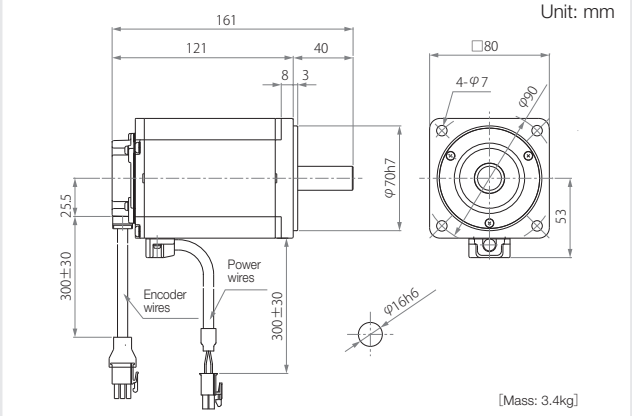

Rated speed	Applicable motor rated output	Type	Mass [kg]
3000r/min	0.75kW	GYS751D7-□B2	3.4kg

GYS motor (without brake)

Unit: mm

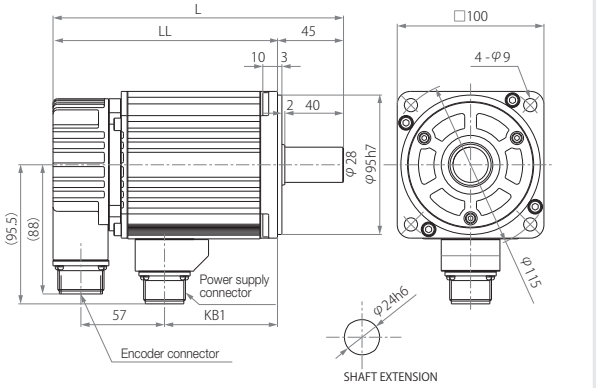

Rated speed	Applicable motor rated output	Type	Overall length L	Dimensions (Flange) LL	Terminal portion KB1	Mass [kg]
3000r/min	1.0kW	GYS102D7-□B2	198	153	77	4.4
	1.5kW	GYS152D7-□B2	220.5	175.5	99.5	5.2
	2.0kW	GYS202D7-□B2	243	198	122	6.3

GYS motor (without brake)

Unit: mm

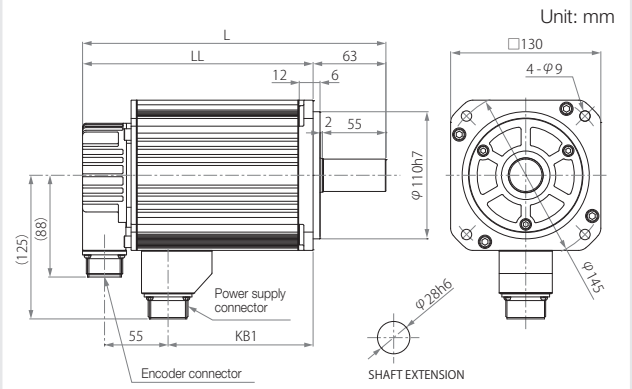

Rated speed	Applicable motor rated output	Type	Overall length L	Dimensions (Flange) LL	Terminal portion KB1	Mass [kg]
3000r/min	3.0kW	GYS302D7-□B2	262.5	199.5	125.5	11
	4.0kW	GYS402D7-□B2	292.5	229.5	155.5	13.5
	5.0kW	GYS502D7-□B2	322.5	259.5	185.5	16

* See Page 37 for the shaft extension specifications of the motor with a key.

External Dimensions: GYS Motor

GYS motor (with brake)

Unit: mm

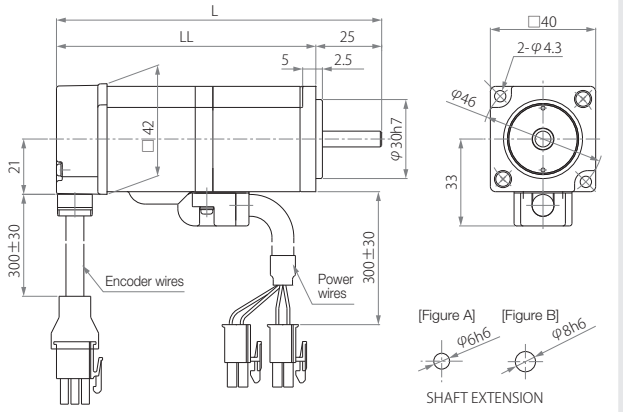

Rated speed	Applicable motor rated output	Type	Shaft shape	Overall length L	Dimensions (Flange) LL	Mass [kg]
3000r/min	0.05kW	GYS500D7-□B2-B	Figure A	123.5	98.5	0.62
	0.1kW	GYS101D7-□B2-B	Figure B	141.5	116.5	0.72

GYS motor (with brake)

Unit: mm

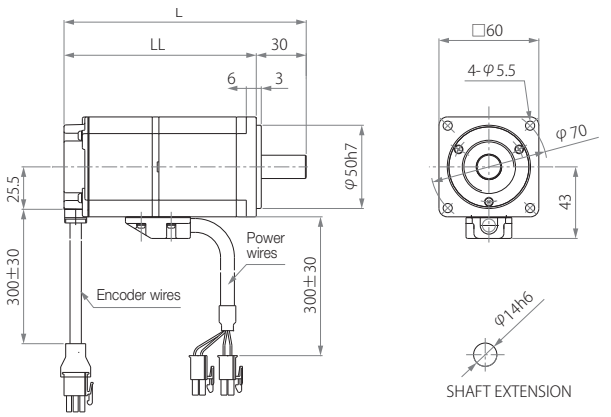

Rated speed	Applicable motor rated output	Type	Overall length L	Dimensions (Flange) LL	Mass [kg]
3000r/min	0.2kW	GYS201D7-□B2-B	145.5	115.5	1.7
	0.4kW	GYS401D7-□B2-B	173.5	143.5	2.3

GYS motor (with brake)

Unit: mm

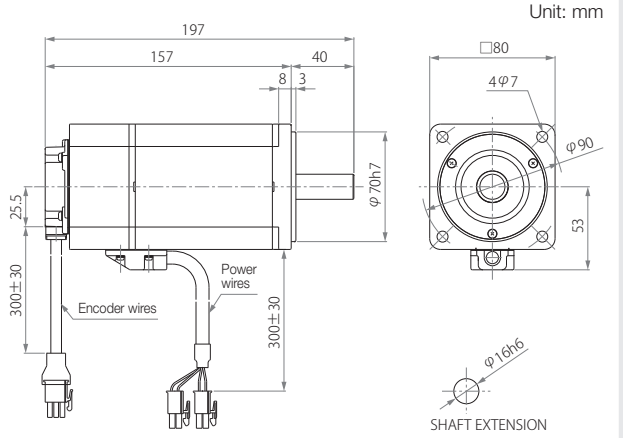

Rated speed	Applicable motor rated output	Type	Mass [kg]
3000r/min	0.75kW	GYS751D7-□B2-B	4.2

GYS motor (with brake)

Unit: mm

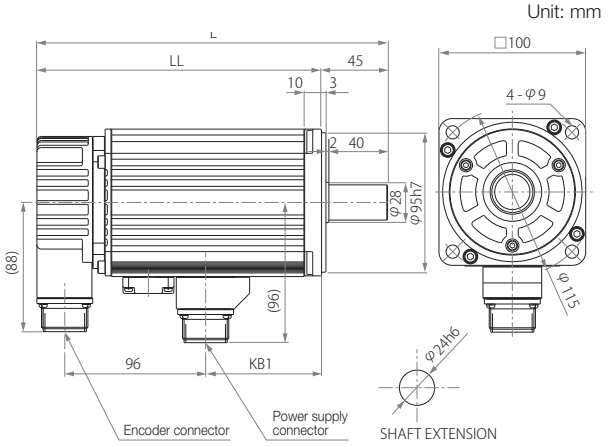

Rated speed	Applicable motor rated output	Type	Overall length L	Dimensions (Flange) LL	Terminal portion KB1	Mass [kg]
3000r/min	1.0kW	GYS102D7-□B2-B	239	194	79	5.9
	1.5kW	GYS152D7-□B2-B	261.5	216.5	101.5	6.8
	2.0kW	GYS202D7-□B2-B	284	239	124	7.9

GYS motor (with brake)

Unit: mm

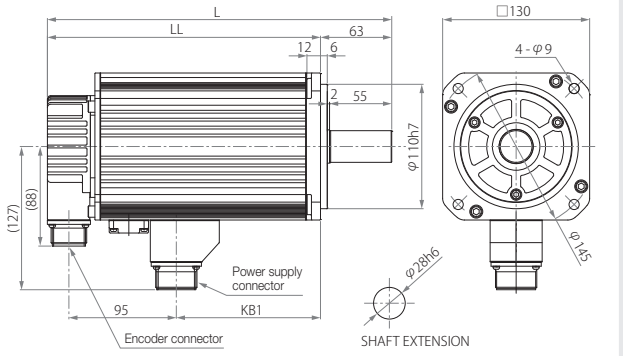

Rated speed	Applicable motor rated output	Type	Overall length L	Dimensions (Flange) LL	Terminal portion KB1	Mass [kg]
3000r/min	3.0kW	GYS302D7-□B2-B	304.5	241.5	127.5	13
	4.0kW	GYS402D7-□B2-B	334.5	271.5	157.5	15.5
	5.0kW	GYS502D7-□B2-B	364.5	301.5	187.5	7.9

* See Page 37 for the shaft extension specifications of the motor with a key.

External Dimensions: GYB Motor, connector type

GYB motor (without brake)

Unit: mm

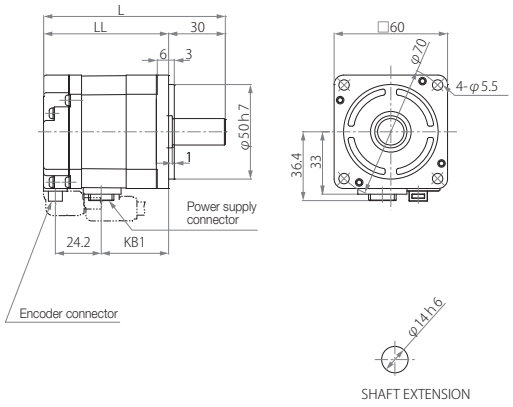

Rated speed	Applicable motor rated output	Type	Overall length	Dimensions (Flange)	Terminal portion	Mass [kg]
			L	LL	KB1	
3000r/min	0.2kW	GYB201D7-□B2-C	96.2	66.2	35.7	0.9
	0.4kW	GYB401D7-□B2-C	114	84	53.5	1.2

GYB motor (without brake)

Unit: mm

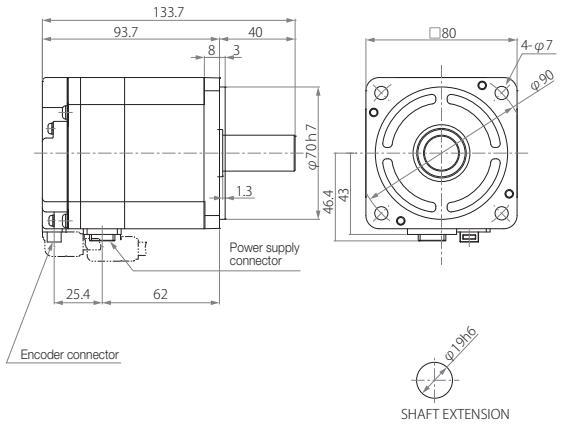

Rated speed	Applicable motor rated output	Type	Mass [kg]
3000r/min	0.75kW	GYB751D7-□B2-C	2.3

GYB motor (with brake)

Unit: mm

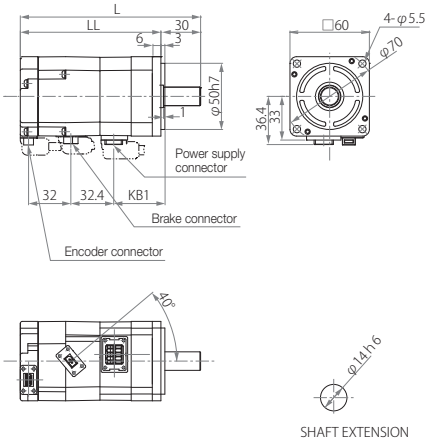

Rated speed	Applicable motor rated output	Type	Overall length	Dimensions (Flange)	Terminal portion	Mass [kg]
			L	LL	KB1	
3000r/min	0.2kW	GYB201D7-□B2-D	136.3	106.3	35.7	1.3
	0.4kW	GYB401D7-□B2-D	154.1	124.1	53.5	1.8

GYB motor (with brake)

Unit: mm

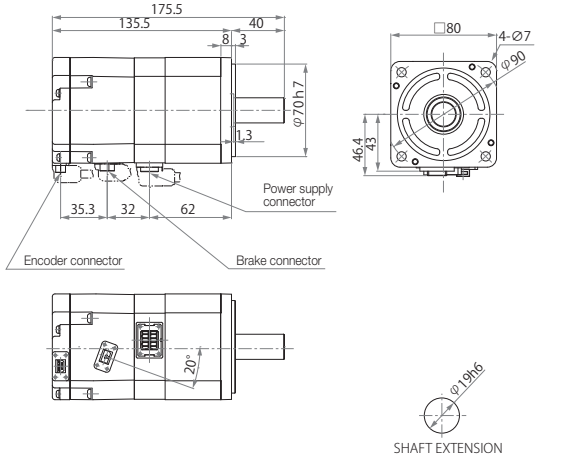

Rated speed	Applicable motor rated output	Type	Mass [kg]
3000r/min	0.75kW	GYB751D7-□B2-D	3.2

* See Page 37 for the shaft extension specifications of the motor with a key.

External Dimensions: GYB Motor, lead wire type

GYB motor (without brake)

Unit: mm

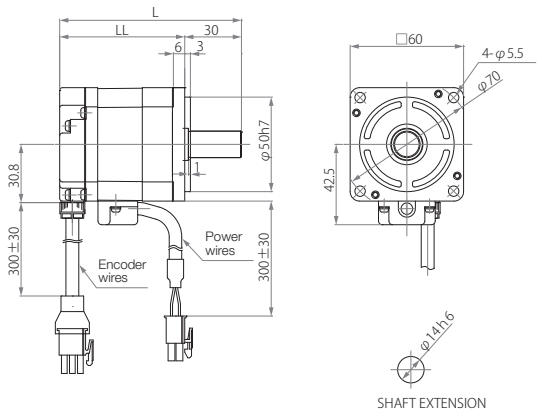

Rated speed	Applicable motor rated output	Type	Overall length	Dimensions (Flange)	Mass [kg]
			L	LL	
3000r/min	0.2kW	GYB201D7-□B2	96.2	66.2	0.9
	0.4kW	GYB401D7-□B2	114	84	1.2

GYB motor (without brake)

Unit: mm

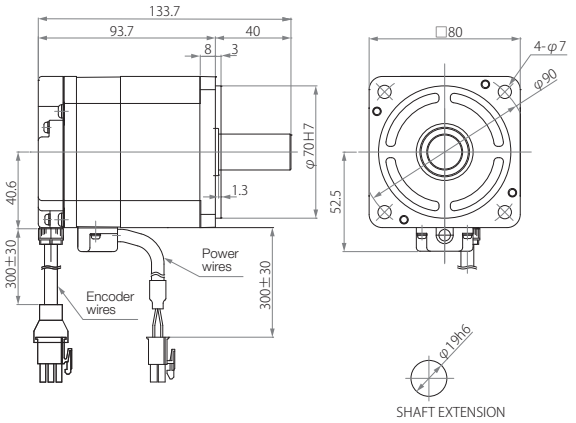

Rated speed	Applicable motor rated output	Type	Mass [kg]
3000r/min	0.75kW	GYB751D7-□B2	2.3

GYB motor (with brake)

Unit: mm

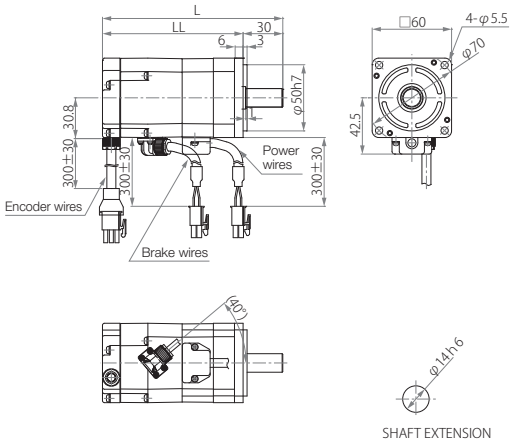

Rated speed	Applicable motor rated output	Type	Overall length	Dimensions (Flange)	Mass [kg]
			L	LL	
3000r/min	0.2kW	GYB201D7-□B2-B	136.3	106.3	1.3
	0.4kW	GYB401D7-□B2-B	154.1	124.1	1.8

GYB motor (with brake)

Unit: mm

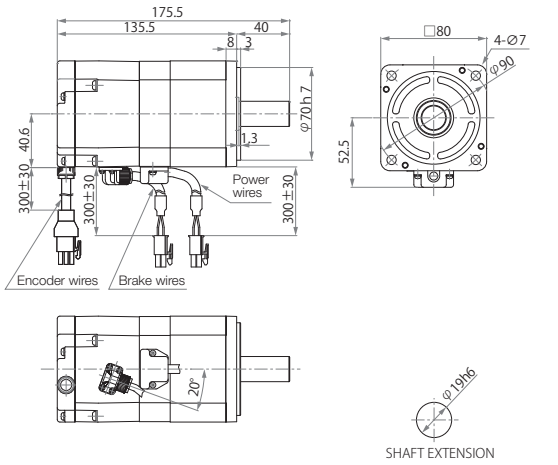

Rated speed	Applicable motor rated output	Type	Mass [kg]
3000r/min	0.75kW	GYB751D7-□B2-B	3.2

* See Page 37 for the shaft extension specifications of the motor with a key.

External Dimensions: GYG Motor

GYG motor (without brake)

Unit: mm

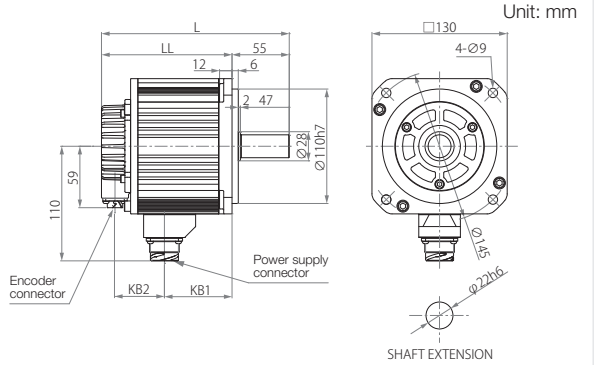

Rated speed	Applicable motor rated output	Type	Overall length	Dimensions (Flange)	Terminal portion		Mass [kg]
			L	LL	KB1	KB2	
2000r/min	1.0kW	GYG102C7-□B2	180.5	125.5	65	47.5	5.6
	1.5kW	GYG152C7-□B2	198	143	82.5	47.5	7.3
	2.0kW	GYG202C7-□B2	232.5	177.5	109	55.5	9.8

GYG motor (with brake)

Unit: mm

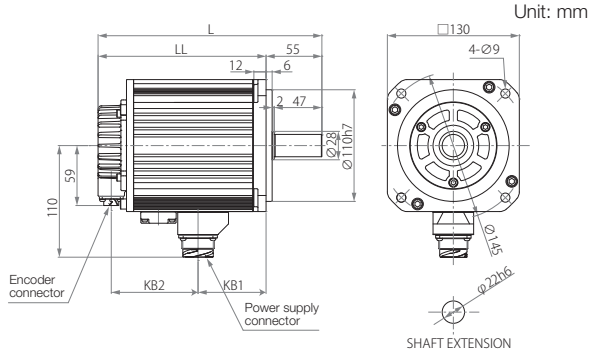

Rated speed	Applicable motor rated output	Type	Overall length	Dimensions (Flange)	Terminal portion		Mass [kg]
			L	LL	KB1	KB2	
2000r/min	1.0kW	GYG102C7-□B2-B	220.5	165.5	67	85.5	7.8
	1.5kW	GYG152C7-□B2-B	238	183	84.5	85.5	9.5
	2.0kW	GYG202C7-□B2-B	272.5	217.5	109	95.5	12.1

GYG motor (without brake)

Unit: mm

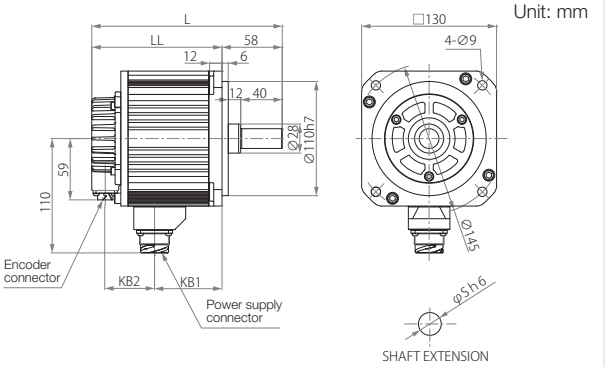

Rated speed	Applicable motor rated output	Type	Overall length	Dimensions (Flange)	Terminal portion		Shaft diameter	Mass [kg]
			L	LL	KB1	KB2	S	
1500r/min	0.85kW	GYG851B7-□B2	183.5	125.5	65	47.5	19	5.6
	1.3kW	GYG132B7-□B2	201	143	82.5	47.5	22	7.3
	1.8kW	GYG182B7-□B2	232.5	177.5	109	55.5	22	9.8

GYG motor (with brake)

Unit: mm

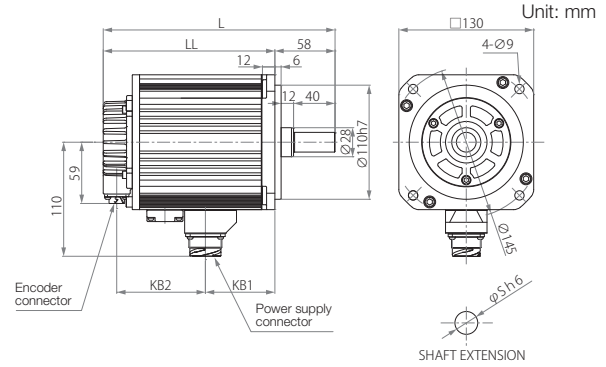

Rated speed	Applicable motor rated output	Type	Overall length	Dimensions (Flange)	Terminal portion		Shaft diameter	Mass [kg]
			L	LL	KB1	KB2	S	
1500r/min	0.85kW	GYG851B7-□B2-B	223.5	165.5	67	85.5	19	7.8
	1.3kW	GYG132B7-□B2-B	241	183	84.5	85.5	22	9.5
	1.8kW	GYG182B7□B2-B	272.5	217.5	109	95.5	22	12.1

* See the following for the shaft extension specifications of the motor with a key.

Shaft extension specifications

Shaft extension specifications [with key, tapped]

Unit: mm

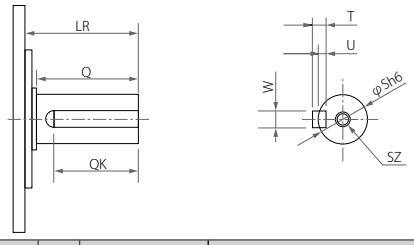

Motor type	LR	Q	QK	S	T	U	W	SZ
GYS motor 3000r/min								
GYS500D7-□A2-□*	25	-	14	6	2	1.2	2	-
GYS101D7-□A2-□*	25	-	14	8	3	1.8	3	-
GYS201D7-□C2-□	30	-	20	14	5	3	5	M5 depth: 8
GYS401D7-□C2-□	30	-	20	14	5	3	5	M5 depth: 8
GYS751D7-□C2-□	40	-	30	16	5	3	5	M5 depth: 8
GYS102D7-□C2-□	45	40	32	24	7	4	8	M8 depth: 16
GYS152D7-□C2-□	45	40	32	24	7	4	8	M8 depth: 16
GYS202D7-□C2-□	45	40	32	24	7	4	8	M8 depth: 16
GYS302D7-□C2-□	63	55	45	28	7	4	8	M8 depth: 16
GYS402D7-□C2-□	63	55	45	28	7	4	8	M8 depth: 16
GYS502D7-□C2-□	63	55	45	28	7	4	8	M8 depth: 16

Motor type	LR	Q	QK	S	T	U	W	SZ
GYB motor 3000r/min								
GYB201D7-□C2-□	30	-	14	14	5	3	5	M5 depth: 8
GYB401D7-□C2-□	30	-	14	14	5	3	5	M5 depth: 8
GYB751D7-□C2-□	40	-	22	19	6	3.5	6	M6 depth: 10
GYG motor 2000r/min								
GYG102C7-□C2-□	55	47	35	22	7	4	8	M8 depth: 16
GYG152C7-□C2-□	55	47	35	22	7	4	8	M8 depth: 16
GYG202C7-□C2-□	55	47	35	22	7	4	8	M8 depth: 16
GYG motor 1500r/min								
GYG851B7-□C2-□	58	40	30	19	6	3.5	6	M6 depth: 10
GYG132B7-□C2-□	58	40	30	22	7	4	8	M8 depth: 16
GYG182B7-□C2-□	55	47	35	22	7	4	8	M8 depth: 16

* The shaft extension of the GYS motors of 0.1kW or less is not tapped.

Options and Peripheral Equipment

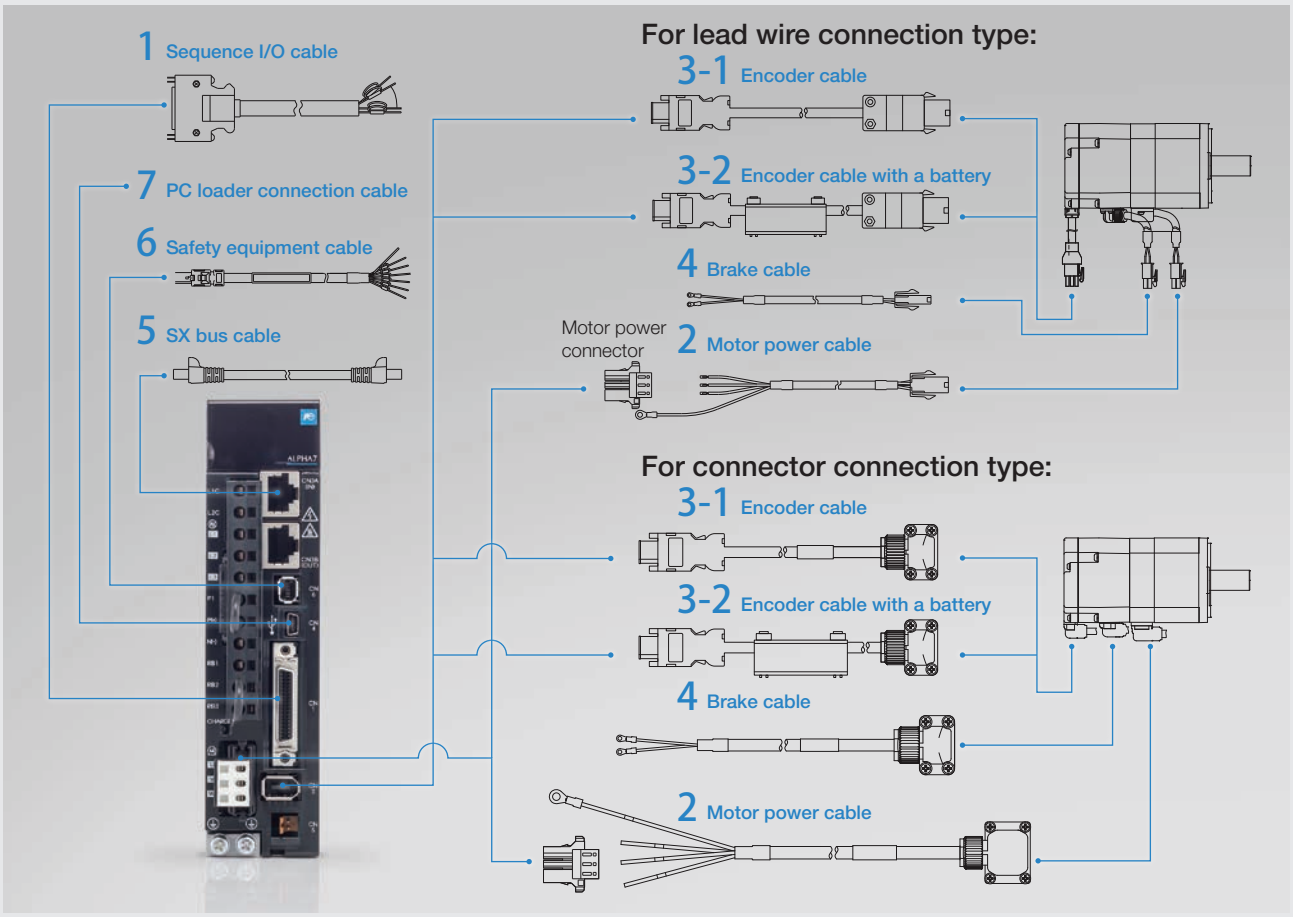

Basic option

Motor series	Wire connection type	Rated speed	Brake	Rated output	1 Sequence I/O cable (between host and amplifier)	2 Motor power cable (between amplifier and motor)	3-1 Encoder cable (between amplifier and motor)	3-2 Encoder cable with a battery*1 (between amplifier and motor)	4 Brake cable	5 SX bus cable	6 Safety equipment cable	7 PC loader cable
GYS motor	Lead wire	3000 r/min	No	0.05kW to 0.75kW	WSC-D36P03 (for VS/LS/VV type) WSC-D14P03 (for VC type) With connector, bare wires on one side, 3m	WSC-M04P02-E WSC-M04P05-E WSC-M04P10-E WSC-M04P20-E	WSC-P06P02-E WSC-P06P05-E WSC-P06P10-E WSC-P06P20-E	WSC-P06P02-BE WSC-P06P05-BE WSC-P06P10-BE WSC-P06P20-BE	-	NP1C-02(2m) NP1C-P□ □...3 (0.3m) 6 (0.6m) and other For details, see the SX catalog.	WSC-D08P01 With connector, bare wires on one side, 1m	USB cable Mini-B type (commercially available one)
			Yes						WSC-M02P02-E WSC-M02P05-E WSC-M02P10-E WSC-M02P20-E			
	Connector		No	1.0kW to 2.0kW	WSK-M04P-CA is used to fabricate this (customer fabrication)	WSC-P06P05-C WSC-P06P10-C WSC-P06P20-C		WSC-P06P02-BC WSC-P06P05-BC WSC-P06P10-BC WSC-P06P20-BC	-			
			Yes		WSK-M06P-CA is used to fabricate this (customer fabrication)				Wired to power supply connector			
			No	3.0kW to 5.0kW	WSK-M04P-CB is used to fabricate this (customer fabrication)				-			
			Yes		WSK-M06P-CB is used to fabricate this (customer fabrication)				Wired to power supply connector			
GYB motor	Lead wire	3000 r/min	No	0.2kW to 0.75kW		WSC-M04P02-E WSC-M04P05-E WSC-M04P10-E WSC-M04P20-E	WSC-P06P02-E WSC-P06P05-E WSC-P06P10-E WSC-P06P20-E	WSC-P06P02-BE WSC-P06P05-BE WSC-P06P10-BE WSC-P06P20-BE	-			
			Yes						WSC-M02P02-E WSC-M02P05-E WSC-M02P10-E WSC-M02P20-E			
	Connector		No	0.2kW to 0.75kW		WSC-M04P02-K WSC-M04P05-K WSC-M04P10-K WSC-M04P20-K	WSC-P06P02-K WSC-P06P05-K WSC-P06P10-K WSC-P06P20-K	WSC-P06P02-BK WSC-P06P05-BK WSC-P06P10-BK WSC-P06P20-BK	-			
			Yes						WSC-M02P02-K WSC-M02P05-K WSC-M02P10-K WSC-M02P20-K			
GYG motor	Connector	2000 r/min	No	1.0kW, 1.5kW, 2.0kW,	WSK-M04P-CC is used to fabricate this (customer fabrication)	WSC-P06P05-J WSC-P06P10-J WSC-P06P20-J		WSC-P06P02-BJ WSC-P06P05-BJ WSC-P06P10-BJ WSC-P06P20-BJ	-			
			Yes		WSK-M06P-CC is used to fabricate this (customer fabrication)				Wired to power supply connector			
		1500 r/min	No	0.85kW, 1.3kW, 1.8kW,	WSK-M04P-CC is used to fabricate this (customer fabrication)				-			
			Yes		WSK-M06P-CC is used to fabricate this (customer fabrication)				Wired to power supply connector			

*1 VV/VC Type

*2 For details on options for ALPHA5 Series motors, refer to “Catalog 24C1-E-0037”

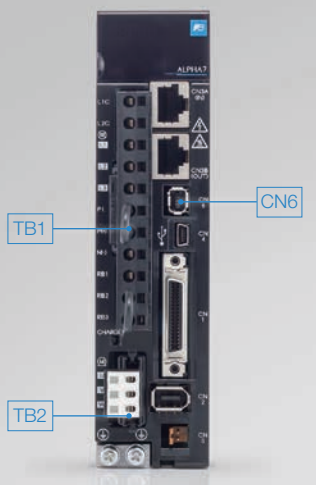

The following connectors are included in the servo amplifier main unit:
TB1: Power supply/DC circuit connector
TB2: Motor power connector
CN6: Short-circuiting connector for safety*

Sequence I/O cable

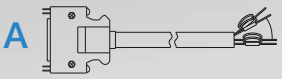

Motor power cable

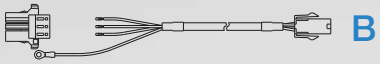

Encoder cable

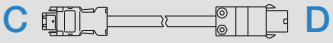

Brake cable

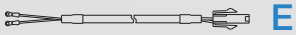

Servo amplifier battery + mounting case set

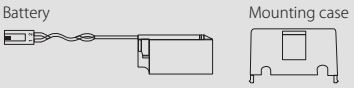

Options (connector kits)

Motor series	Wire connection type	Rated speed	Brake	Rated output	A Sequence I/O connector	B Motor power connector (motor side)	C Encoder connector (amplifier side)	D Encoder connector (motor side)	E Brake connector
GYS motor	Lead wire	3000r/min	No	0.05kW to 0.75kW	WSK-D36P (for VS/LS/VV type) WSK-D14P (for VC type)	WSK-M04P-E	WSK-P06P-M	WSK-P09P-D	-
			Yes						WSK-M02P-E
	Connector		No	1kW to 2kW		WSK-M04P-CA		WSK-P06P-C	-
			Yes			WSK-M06P-CA			Wired to power supply connector
			No	3kW to 5kW		WSK-M04P-CB			-
			Yes			WSK-M06P-CB			Wired to power supply connector
GYB motor	Lead wire	3000r/min	No	0.2kW to 0.75kW		WSK-M04P-E		WSK-P09P-D	-
			Yes						WSK-M02P-E
	Connector		No	0.2kW to 0.75kW		-		-	-
			Yes						
GYG motor	Connector	2000r/min	No	1.0kW, 1.5kW, 2.0kW		WSK-M04P-CC		WSK-P10P-J	-
			Yes			WSK-M06P-CC			Wired to power supply connector
	Connector	1500r/min	No	0.85kW, 1.3kW, 1.8kW		WSK-M04P-CC			-
			Yes			WSK-M06P-CC			Wired to power supply connector

Peripherals

Input power	Servo amplifier type	Applicable motor rated output [kW]	Power supply capacity [kVA]	Input current [A]	Power filter	AC reactor	DC reactor	Wiring breaker	Earth leakage breaker	Electromagnetic contactor
Single-phase 200V	RYT500F7-□□2	0.05	0.1	0.6	RNFTD06-20	ACR2-0.4A	DCR2-0.2	BW32AAG-2P003	EW32AAG-2P003	SC-03
	RYT101F7-□□2	0.10	0.2	1.2			DCR2-0.4			
	RYT201F7-□□2	0.20	0.4	2.2		ACR2-0.75A	DCR2-0.75	BW32AAG-2P005	EW32AAG-2P005	
	RYT401F7-□□2	0.40	0.8	4.3	RNFTD10-20	ACR2-1.5A	DCR2-1.5	BW32AAG-2P010	EW32AAG-2P010	
	RYT751F7-□□2	0.75	1.5	7.9	RNFTD20-20	ACR2-2.2A	DCR2-2.2	BW32AAG-2P015	EW32AAG-2P015	SC-0
3-phase 200V	RYT500F7-□□2	0.05	0.1	0.4	RNFTD06-20	ACR2-0.4A	DCR2-0.2	BW32AAG-3P003	EW32AAG-3P003	SC-03
	RYT101F7-□□2	0.10	0.2	0.7						
	RYT201F7-□□2	0.20	0.4	1.3			DCR2-0.4			
	RYT401F7-□□2	0.40	0.8	2.5		ACR2-0.75A	DCR2-0.75	BW32AAG-3P005	EW32AAG-3P005	
	RYT751F7-□□2	0.75	1.5	4.5	RNFTD10-20	ACR2-1.5A	DCR2-1.5	BW32AAG-3P010	EW32AAG-3P010	
	RYT102F7-□□2	1.0	2.0	6.4		ACR2-2.2A	DCR2-2.2	BW32AAG-3P015	EW32AAG-3P015	
	RYT152F7-□□2	1.5	2.9	9.6	RNFTC20-20			BW32AAG-3P020	EW32AAG-3P020	SC-4-1
	RYT202F7-□□2	2.0	3.9	11.1		ACR2-3.7A	DCR2-3.7	BW32AAG-3P030	EW32AAG-3P030	
	RYT302F7-□□2	3.0	5.9	16.6	RNFTC30-20	ACR2-5.5A	DCR2-5.5	BW50AAG-3P040	EW50AAG-3P040	SC-N1
	RYT402F7-□□2	4.0	7.8	20.9	RNFTC50-20	ACR2-7.5A	DCR2-7.5	BW50AAG-3P050	EW50AAG-3P050	SC-N2
	RYT502F7-□□2	5.0	9.8	26.1		ACR2-11A	DCR2-11			

Model List: Servo Amplifiers

Category	Specifications						Type
	Model	Control mode	Command interface	Input voltage	Frame	Applicable motor rated output [kW]	
Amplifier	VS type	Position/ Speed/ Torque control	SX bus	Single-phase or 3-phase 200 to 240V	Frame 1	0.05	RYT500F7-VS2
						0.1	RYT101F7-VS2
						0.2	RYT201F7-VS2
						0.4	RYT401F7-VS2
					Frame 2	0.75	RYT751F7-VS2
				3-phase 200 to 240V		0.85	RYT102F7-VS2
						1.0	
						1.5	RYT152F7-VS2
					Frame 3	2.0	RYT202F7-VS2
						3.0	RYT302F7-VS2
					Frame 4	4.0	RYT402F7-VS2
						5.0	RYT502F7-VS2
	LS type	Position control (Built-in positioning function)	SX bus	Single-phase or 3-phase 200 to 240V	Frame 1	0.05	RYT500F7-LS2
						0.1	RYT101F7-LS2
						0.2	RYT201F7-LS2
						0.4	RYT401F7-LS2
					Frame 2	0.75	RYT751F7-LS2
				Single-phase or 3-phase 200 to 240V		0.85	RYT102F7-LS2
						1.0	
						1.5	RYT152F7-LS2
					Frame 3	2.0	RYT202F7-LS2
						3.0	RYT302F7-LS2
					Frame 4	4.0	RYT402F7-LS2
						5.0	RYT502F7-LS2
	VV type	Position/ Speed/ Torque control (Built-in positioning function)	General-purpose interface	Single-phase or 3-phase 200 to 240V	Frame 1	0.05	RYT500F7-VV2
						0.1	RYT101F7-VV2
						0.2	RYT201F7-VV2
						0.4	RYT401F7-VV2
					Frame 2	0.75	RYT751F7-VV2
				3-phase 200 to 240V		0.85	RYT102F7-VV2
						1.0	
						1.5	RYT152F7-VV2
					Frame 3	2.0	RYT202F7-VV2
						3.0	RYT302F7-VV2
					Frame 4	4.0	RYT402F7-VV2
						5.0	RYT502F7-VV2
	VC type	Position/ Speed/ Torque control	EtherCAT	Single-phase or 3-phase 200 to 240V	Frame 1	0.05	RYT500F7-VC2
						0.1	RYT101F7-VC2
						0.2	RYT201F7-VC2
						0.4	RYT401F7-VC2
					Frame 2	0.75	RYT751F7-VC2
				3-phase 200 to 240V		0.85	RYT102F7-VC2
						1.0	
						1.5	RYT152F7-VC2
					Frame 3	2.0	RYT202F7-VC2
						3.0	RYT302F7-VC2
					Frame 4	4.0	RYT402F7-VC2
						5.0	RYT502F7-VC2

Model List: Servomotors

Category	Specifications									Type
	Model	Voltage	Rated speed	Oil seal/ Shaft	Encoder	Brake	Wire connection	Flange □	Applicable motor rated output [kW]	
Motor	GYS motor (Ultra-low Inertia)	200V	3000 r/min	Without oil seal Without key *1	24-bit ABS	No	Lead wire	□40	0.05	GYS500D7-EB2
									0.1	GYS101D7-EB2
								□60	0.2	GYS201D7-EB2
									0.4	GYS401D7-EB2
								□80	0.75	GYS751D7-EB2
							Connector	□100	1.0	GYS102D7-EB2
									1.5	GYS152D7-EB2
									2.0	GYS202D7-EB2
								□130	3.0	GYS302D7-EB2
									4.0	GYS402D7-EB2
									5.0	GYS502D7-EB2
						Yes	Lead wire	□40	0.05	GYS500D7-EB2-B
									0.1	GYS101D7-EB2-B
								□60	0.2	GYS201D7-EB2-B
									0.4	GYS401D7-EB2-B
								□80	0.75	GYS751D7-EB2-B
							Connector	□100	1.0	GYS102D7-EB2-B
									1.5	GYS152D7-EB2-B
									2.0	GYS202D7-EB2-B
								□130	3.0	GYS302D7-EB2-B
									4.0	GYS402D7-EB2-B
									5.0	GYS502D7-EB2-B
					24-bit INC	No	Lead wire	□40	0.05	GYS500D7-NB2
									0.1	GYS101D7-NB2
								□60	0.2	GYS201D7-NB2
									0.4	GYS401D7-NB2
								□80	0.75	GYS751D7-NB2
							Connector	□100	1.0	GYS102D7-NB2
									1.5	GYS152D7-NB2
									2.0	GYS202D7-NB2
								□130	3.0	GYS302D7-NB2
									4.0	GYS402D7-NB2
									5.0	GYS502D7-NB2
						Yes	Lead wire	□40	0.05	GYS500D7-NB2-B
									0.1	GYS101D7-NB2-B
								□60	0.2	GYS201D7-NB2-B
									0.4	GYS401D7-NB2-B
								□80	0.75	GYS751D7-NB2-B
							Connector	□100	1.0	GYS102D7-NB2-B
									1.5	GYS152D7-NB2-B
									2.0	GYS202D7-NB2-B
								□130	3.0	GYS302D7-NB2-B
									4.0	GYS402D7-NB2-B
									5.0	GYS502D7-NB2-B
	GYB motor (Medium Inertia)	200V	3000 r/min	Without oil seal Without key *1	24-bit ABS	No	Connector	□60	0.2	GYB201D7-EB2-C
									0.4	GYB401D7-EB2-C
								□80	0.75	GYB751D7-EB2-C
						Yes	Connector	□60	0.2	GYB201D7-EB2-D
									0.4	GYB401D7-EB2-D
								□80	0.75	GYB751D7-EB2-D
					24-bit INC	No	Connector	□60	0.2	GYB201D7-NB2-C
									0.4	GYB401D7-NB2-C
								□80	0.75	GYB751D7-NB2-C
						Yes	Connector	□60	0.2	GYB201D7-NB2-D
									0.4	GYB401D7-NB2-D
								□80	0.75	GYB751D7-NB2-D
					24-bit ABS	No	Lead wire	□60	0.2	GYB201D7-EB2
									0.4	GYB401D7-EB2
								□80	0.75	GYB751D7-EB2
						Yes	Lead wire	□60	0.2	GYB201D7-EB2-B
									0.4	GYB401D7-EB2-B
								□80	0.75	GYB751D7-EB2-B
					24-bit INC	No	Lead wire	□60	0.2	GYB201D7-NB2
									0.4	GYB401D7-NB2
								□80	0.75	GYB751D7-NB2
						Yes	Lead wire	□60	0.2	GYB201D7-NB2-B
									0.4	GYB401D7-NB2-B
								□80	0.75	GYB751D7-NB2-B
	GYG motor (Medium Inertia)	200V	2000 r/min	Without oil seal Without key *1	24-bit ABS	No	Connector	□130	1.0	GYG102C7-EB2
									1.5	GYG152C7-EB2
									2.0	GYG202C7-EB2
						Yes			1.0	GYG102C7-EB2-B
									1.5	GYG152C7-EB2-B
									2.0	GYG202C7-EB2-B
					24-bit INC	No			1.0	GYG102C7-NB2
									1.5	GYG152C7-NB2
									2.0	GYG202C7-NB2
						Yes			1.0	GYG102C7-NB2-B
									1.5	GYG152C7-NB2-B
									2.0	GYG202C7-NB2-B
			1500 r/min		24-bit ABS	No			0.85	GYG851B7-EB2
									1.3	GYG132B7-EB2
									1.8	GYG182B7-EB2
						Yes			0.85	GYG851B7-EB2-B
									1.3	GYG132B7-EB2-B
									1.8	GYG182B7-EB2-B
					24-bit INC	No			0.85	GYG851B7-NB2
									1.3	GYG132B7-NB2
									1.8	GYG182B7-NB2
						Yes			0.85	GYG851B7-NB2-B
									1.3	GYG132B7-NB2-B
									1.8	GYG182B7-NB2-B

*1: The table above shows representative models without an oil seal and without a key.

Model List: Options

Category	Name			Applicable	Specifications	Type
Options	For sequence I/O (between host and amplifier)	Sequence I/O cable		For VS, LS, and VV servo amplifiers	3m (bare wires on one side)	WSC-D36P03
				For VS servo amplifiers	3m (bare wires on one side)	WSC-D14P03
		Sequence I/O connector*1		For VS, LS, and VV servo amplifiers	1 set	WSK-D36P
				For VC servo amplifiers	1 set	WSK-D14P
	For safety equipment	Safety equipment cable		Amplifier side: all capacities	1m (bare wires on one side)	WSC-D08P01
	For motor power (between amplifier and motor)	Motor power cable	For main motor power	GYS: 0.05 to 0.75kW GYB: 0.2 to 0.75kW (Lead wire type)	2m (bare wires on one side)	WSC-M04P02-E
					5m (bare wires on one side)	WSC-M04P05-E
					10m (bare wires on one side)	WSC-M04P10-E
					20m (bare wires on one side)	WSC-M04P20-E
				GYB: 0.2 to 0.75kW (Connector type)	2m (bare wires on one side)	WSC-M04P02-K
					5m (bare wires on one side)	WSC-M04P05-K
					10m (bare wires on one side)	WSC-M04P10-K
					20m (bare wires on one side)	WSC-M04P20-K
			For brake power	GYS: 0.05 to 0.75kW GYB: 0.2 to 0.75kW (Lead wire type)	2m (bare wires on one side)	WSC-M02P02-E
					5m (bare wires on one side)	WSC-M02P05-E
					10m (bare wires on one side)	WSC-M02P10-E
					20m (bare wires on one side)	WSC-M02P20-E
				GYB: 0.2 to 0.75kW (Connector type)	2m (bare wires on one side)	WSC-M02P02-K
					5m (bare wires on one side)	WSC-M02P05-K
					10m (bare wires on one side)	WSC-M02P10-K
					20m (bare wires on one side)	WSC-M02P20-K
		Motor power connector*1	For main motor power	GYS/GYB: 0.05 to 0.75kW*2	1 set	WSK-M04P-E
				GYS: 1.0 to 2.0kW	1 set	WSK-M04P-CA
				GYS: 3.0 to 5.0kW	1 set	WSK-M04P-CB
				GYG: 0.85 to 2.0kW	1 set	WSK-M04P-CC
			For brake power	GYS/GYB: 0.05 to 0.75kW*2	1 set	WSK-M02P-E
			For brake power	GYS: 1.0 to 2.0kW	1 set	WSK-M06P-CA
				GYS: 3.0 to 5.0kW	1 set	WSK-M06P-CB
				GYG: 0.85 to 2.0kW	1 set	WSK-M06P-CC
	For encoder (between amplifier and motor)	Encoder cable		GYS: 0.05 to 0.75kW GYB: 0.2 to 0.75kW (Lead wire type)	2m	WSC-P06P02-E
					5m	WSC-P06P05-E
					10m	WSC-P06P10-E
					20m	WSC-P06P20-E
				GYB: 0.2 to 0.75kW (Connector type)	2m	WSC-P06P02-K
					5m	WSC-P06P05-K
					10m	WSC-P06P10-K
					20m	WSC-P06P20-K
				GYS: 1.0 to 5.0kW	5m	WSC-P06P05-C
					10m	WSC-P06P10-C
					20m	WSC-P06P20-C
				GYG: 0.85 to 2.0kW	5m	WSC-P06P05-J
					10m	WSC-P06P10-J
					20m	WSC-P06P20-J
		Encoder connector*1		Amplifier side: all capacities	1 set	WSK-P06P-M
				GYS/GYB: 0.05 to 0.75kW*2	1 set	WSK-P09P-D
				GYS: 1.0 to 5.0kW	1 set	WSK-P06P-C
				GYG: 0.85 to 2.0kW	1 set	WSK-P10P-J
		Junction cable for encoder with battery		For VV and VC servo amplifiers	0.3m	WSC-P06P0R3-BG
		Encoder cable with a battery (1)		For VV and VC servo amplifiers GYS/GYB Lead wire connection specifications 0.75kW or less	2m	WSC-P06P02-BE
					5m	WSC-P06P05-BE
					10m	WSC-P06P10-BE
					20m	WSC-P06P20-BE
		Encoder cable with a battery (2)		For VV and VC servo amplifiers GYB Connector connection specification 0.75kW or less	2m	WSC-P06P02-BK
					5m	WSC-P06P05-BK
					10m	WSC-P06P10-BK
					20m	WSC-P06P20-BK
		Encoder cable with a battery (3)		For VV and VC servo amplifiers GYS 1.0 [kW] or more	2m	WSC-P06P02-BC
					5m	WSC-P06P05-BC
					10m	WSC-P06P10-BC
					20m	WSC-P06P20-BC
		Encoder cable with a battery (4)		For VV and VC servo amplifiers GYG	2m	WSC-P06P02-BJ
					5m	WSC-P06P05-BJ
					10m	WSC-P06P10-BJ
					20m	WSC-P06P20-BJ
		Battery case kit for encoder cable		For VV and VC servo amplifiers	1 set	WSB-BC
	For SX bus	SX bus cable		For VS and LS servo amplifiers	0.3m	NP1C-P3
					0.6m	NP1C-P6
					0.8m	NP1C-P8
					2m	NP1C-02
					5m	NP1C-05
					10m	NP1C-10
					15m	NP1C-15
					25m	NP1C-25
	ABS backup battery			Battery and mounting case set for VS servo amplifier * With mounting case	1 set	WSB-SC
				Battery * Replacement battery only	1 piece	WSB-S
	External regenerative resistor			GYS, GYB: 0.05 to 0.4kW	1 piece	WSR-401
				GYS, GYB: 0.75 to 1.5kW, GYG: 0.85, 1.0kW	1 piece	WSR-152
				GYS: 2.0 to 3.0kW GYG: 1.3kW, 2.0kW	1 piece	DB11-2
				GYS: 4.0 to 5.0kW	1 piece	DB22-2
	For PC loader connection	RS232C-RS-485 Conversion adapter		For connection of VV type servo amplifier's RS-485 port	-	NW0H-CNV
		Cable			2m	WSC-PCL

*1: This connector is intended for use when the customer fabricates a cable of an arbitrary length.
*2: This is not necessary for GYB motors, connector type.

Gearhead combination table

Applicable motor	Capacity [kW]	Compatible servo motor type	Deceleration ratio 1/5		Deceleration ratio 1/9		Deceleration ratio 1/15		Deceleration ratio 1/25	
			Reduction gear type	Reduction gear part number code	Reduction gear type	Reduction gear part number code	Reduction gear type	Reduction gear part number code	Reduction gear type	Reduction gear part number code
GYS GYB	0.05	**GYS500D7-○□2-△**	GYN500SCG-G05XD	GYN300S	GYN500SCG-G09XD	GYN320S	GYN500SCG-G15XD	GYN360S	GYN500SCG-G25XD	GYN340S
	0.1	**GYS101D7-○□2-△**	GYN101SCG-G05XD	GYN301S	GYN101SCG-G09XD	GYN321S	GYN101SCG-G15XD	GYN361S	GYN101SCG-G25XD	GYN341S
	0.2	**GYS201D7-○□2-△**	GYN201SCG-G05XD	GYN302S	GYN201SCG-G09XD	GYN322S	GYN201SCG-G15XD	GYN362S	GYN201SCG-G25XD	GYN342S
		GYB201D7-○□2-△								
	0.4	**GYS401D7-○□2-△**	GYN401SCG-G05XD	GYN303S	GYN401SCG-G09XD	GYN323S	GYN401SCG-G15XD	GYN363S	GYN401SCG-G25XD	GYN343S
		GYB401D7-○□2-△								
	0.75	**GYS751D7-○□2-△**	GYN751SCG-G05XD	GYN304S	GYN751SCG-G09XD	GYN324S	GYN751SCG-G15XD	GYN364S	GYN751SCG-G25XD	GYN344S
		GYB751D7-○□2-△	GYN751BCG-G05XD*1	GYN301B	GYN751BCG-G09XD*1	GYN302B	GYN751BCG-G15XD*1	GYN304B	GYN751BCG-G25XD*1	GYN303B
	1	**GYS102D7-○□2-△**	—	—	GYN202SCG-G09XD	GYN325S	GYN202SCG-G15XD	GYN365S	—	—
	1.5	**GYS152D7-○□2-△**	—	—					—	—
	2	**GYS202D7-○□2-△**	—	—					—	—

*1: The hole diameter of the motor insertion part is different.

The symbols ○, □, △ in the nomenclature are explained below.

○	Encoder type	E	24-bit ABS: Support for functional safety
		N	24-bit INC: Support for functional safety
□	Shaft extension *Motors with E, F, or G oil seals cannot be used.	A	Without oil seal, straight, with key
		B	Without oil seal, straight, without key
		C	Without oil seal, straight, with key/with tap
△	Connection/brake	Unmarked	Lead wire/without brake
		B	Lead wire/with brake
		C	Connector/without brake
		D	Connector/with brake

Note) By removing the key from the shaft, it can be assembled with a key-equipped motor.

Gearhead dimensions: For GYS and GYB Motors

Unit：mm

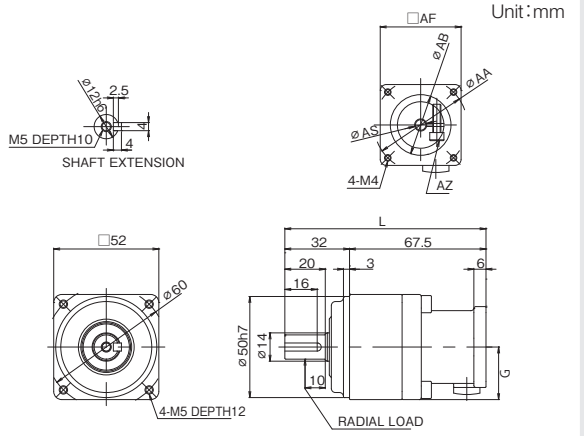

Type	Size							Mass [kg]
	L	AF	AA	AZ	AB	AS	G	
GYN500SCG-G05XD	99.5	40	46	M4	30	6	23.5	0.55
GYN500SCG-G09XD								
GYN500SCG-G15XD	110							0.7
GYN500SCG-G25XD								
GYN101SCG-G05XD	99.5					8		0.55
GYN101SCG-G09XD								
GYN101SCG-G15XD	110							0.7
GYN101SCG-G25XD								
GYN201SCG-G05XD	104.5	60	70	M5	50	14	33.5	0.72

Unit：mm

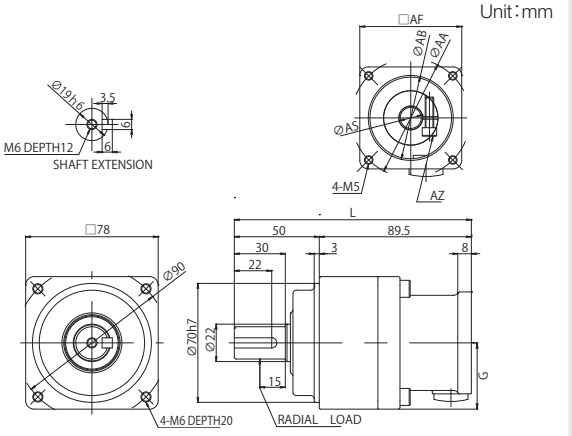

Type	Size							Mass [kg]
	L	AF	AA	AZ	AB	AS	G	
GYN201SCG-G09XD	139.5	90	70	M5	50	14	34.5	1.7
GYN201SCG-G15XD	150							2.1
GYN201SCG-G25XD								
GYN401SCG-G05XD	139.5							1.7
GYN401SCG-G09XD								
GYN401SCG-G15XD	150							2.1
GYN401SCG-G25XD								
GYN751SCG-G05XD	143.5	80	90	M6	70	16	44.5	
GYN751BCG-G05XD						19		

Unit：mm

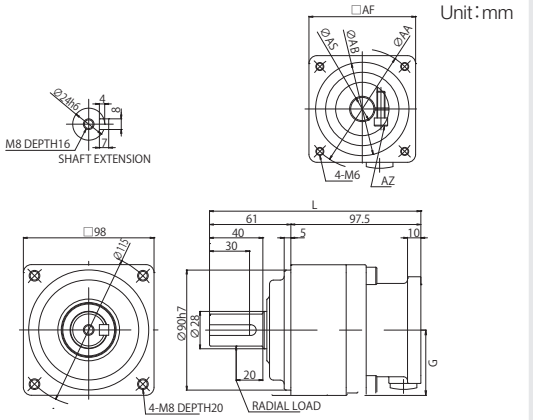

Type	Size							Mass [kg]
	L	AF	AA	AZ	AB	AS	G	
GYN751SCG-G09XD	158.5	80	90	M6	70	16	44.5	3.4
GYN751BCG-G09XD						19		
GYN751SCG-G15XD	171							3.8
GYN751BCG-G15XD								
GYN751SCG-G25XD								
GYN751BCG-G25XD								

Unit：mm

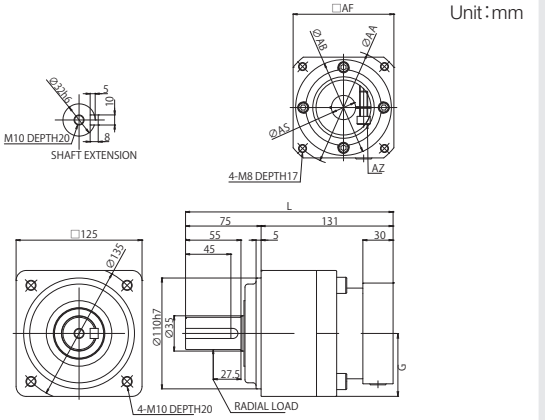

Type	Size							Mass [kg]
	L	AF	AA	AZ	AB	AS	G	
GYN202SCG-G09XD	206	100	115	M8	95	24	51	7.1
GYN202SCG-G15XD	222							8.4

Specification List

Common

Backlash	0.25°(15′)
Degree of protection	IP40

Deceleration ratio: 1/5

Reduction gear type (GYS and GYB)		GYN500SCG-G05XD	GYN101SCG-G05XD	GYN201SCG-G05XD	GYN401SCG-G05XD	GYN751SCG-G05XD GYN751BCG-G05XD
Applicable motor capacity	[kW]	0.05	0.1	0.2	0.4	0.75
Output shaft rated rotation speed	[min^{-1}]	600				
Output shaft rated torque	[N-m]	0.652	1.43	2.93	5.60	11.0
Output shaft instantaneous maximum torque	[N-m]	1.96	4.29	8.78	16.8	32.9
Allowable radial load	[N]	490			980	
Allowable thrust load	[N]	245			490	
Motor shaft converted moment of inertia (GYS-GYB)	[kg m^2]	0.0604×10^{-4}		0.147×10^{-4}	0.370×10^{-4}	0.817×10^{-4}

Deceleration ratio: 1/9

Reduction gear type (GYS and GYB)		GYN500SCG-G09XD	GYN101SCG-G09XD	GYN201SCG-G09XD	GYN401SCG-G09XD	GYN751SCG-G09XD GYN751BCG-G09XD
Applicable motor capacity	[kW]	0.05	0.1	0.2	0.4	0.75
Output shaft rated rotation speed	[min^{-1}]	333				
Output shaft rated torque	[N-m]	1.17	2.58	4.75	10.1	19.5
Output shaft instantaneous maximum torque	[N-m]	3.52	7.73	14.3	30.2	58.6
Allowable radial load	[N]	588		1,180		1,470
Allowable thrust load	[N]	294		588		735
Motor shaft converted moment of inertia (GYS-GYB)	[kg m^2]	0.0497×10^{-4}		0.273×10^{-4}		0.755×10^{-4}

Reduction gear type (GYS and GYB)		GYN202SCG-G09XD		
Applicable motor capacity	[kW]	1.0	1.5	2.0
Output shaft rated rotation speed	[min^{-1}]	333		
Output shaft rated torque	[N-m]	26.3	39.9	53.8
Output shaft instantaneous maximum torque	[N-m]	79.0	120	162
Allowable radial load	[N]	1,960		
Allowable thrust load	[N]	980		
Motor shaft converted moment of inertia (GYS-GYB)	[kg m^2]	2.75×10^{-4}		

Deceleration ratio: 1/15

Reduction gear type (GYS and GYB)		GYN500SCG-G15XD	GYN101SCG-G15XD	GYN201SCG-G15XD	GYN401SCG-G15XD	GYN751SCG-G15XD GYN751BCG-G15XD
Applicable motor capacity	[kW]	0.05	0.1	0.2	0.4	0.75
Output shaft rated rotation speed	[min^{-1}]	200				
Output shaft rated torque	[N-m]	1.84	4.10	8.20	17.0	31.9
Output shaft instantaneous maximum torque	[N-m]	5.51	12.3	24.6	51.0	95.6
Allowable radial load	[N]	784		1,470		1,760
Allowable thrust load	[N]	392		735		882
Motor shaft converted moment of inertia (GYS-GYB)	[kg m^2]	0.0525×10^{-4}		0.302×10^{-4}		0.685×10^{-4}

Reduction gear type (GYS and GYB)		GYN202SCG-G15XD		
Applicable motor capacity	[kW]	1.0	1.5	2.0
Output shaft rated rotation speed	[min^{-1}]	200		
Output shaft rated torque	[N-m]	42.0	63.7	84.9
Output shaft instantaneous maximum torque	[N-m]	126	191	255
Allowable radial load	[N]	2,350		
Allowable thrust load	[N]	1,180		
Motor shaft converted moment of inertia (GYS-GYB)	[kg m^2]	2.83×10^{-4}		

Deceleration ratio: 1/25

Reduction gear type (GYS and GYB)		GYN500SCG-G25XD	GYN101SCG-G25XD	GYN201SCG-G25XD	GYN401SCG-G25XD	GYN751SCG-G25XD GYN751BCG-G25XD
Applicable motor capacity	[kW]	0.05	0.1	0.2	0.4	0.75
Output shaft rated rotation speed	[min^{-1}]	120				
Output shaft rated torque	[N-m]	3.06	6.84	13.7	28.3	53.1
Output shaft instantaneous maximum torque	[N-m]	9.18	20.5	41.0	85.0	159
Allowable radial load	[N]	882		1,670		2,060
Allowable thrust load	[N]	441		833		1,030
Motor shaft converted moment of inertia (GYS-GYB)	[kg m^2]	0.0514×10^{-4}		0.293×10^{-4}		0.658×10^{-4}

Product Warranty

Please take the following items into consideration when placing your order.

When requesting an estimate and placing your orders for the products included in these materials, please be aware that any items such as specifications which are not specifically mentioned in the contract, catalog, specifications or other materials will be as mentioned below.
In addition, the products included in these materials are limited in the use they are put to and the place where they can be used, etc., and may require periodic inspection. Please confirm these points with your sales representative or directly with this company.
Furthermore, regarding purchased products and delivered products, we request that you take adequate consideration of the necessity of rapid receiving inspections and of product management and maintenance even before receiving your products.

1. Free of Charge Warranty Period and Warranty Range

1-1 Free of charge warranty period

(1) The product warranty period is ''1 year from the date of purchase'' or 24 months from the manufacturing date imprinted on the name place, whichever date is earlier.
(2) However, in cases where the use environment, conditions of use, use frequency and times used, etc., have an effect on product life, this warranty period may not apply.
(3) Furthermore, the warranty period for parts restored by Fuji Electric's Service Department is ''6 months from the date that repairs are completed.''

1-2 Warranty range

(1) In the event that breakdown occurs during the product's warranty period which is the responsibility of Fuji Electric, Fuji Electric will replace or repair the part of the product that has broken down free of charge at the place where the product was purchased or where it was delivered. However, if the following cases are applicable, the terms of this warranty may not apply.

1) The breakdown was caused by inappropriate conditions, environment, handling or use methods, etc. which are not specified in the catalog, operation manual, specifications or other relevant documents.
2) The breakdown was caused by the product other than the purchased or delivered Fuji's product.
3) The breakdown was caused by the product other than Fuji's product, such as the customer's equipment or software design, etc.
4) Concerning the Fuji's programmable products, the breakdown was caused by a program other than a program supplied by this company, or the results from using such a program.
5) The breakdown was caused by modifications or repairs affected by a party other than Fuji Electric.
6) The breakdown was caused by improper maintenance or replacement using consumables, etc. specified in the operation manual or catalog, etc.
7) The breakdown was caused by a chemical or technical problem that was not foreseen when making practical application of the product at the time it was purchased or delivered.
8) The product was not used in the manner the product was originally intended to be used.
9) The breakdown was caused by a reason which is not this company's responsibility, such as lightning or other disaster.

(2) Furthermore, the warranty specified herein shall be limited to the purchased or delivered product alone.
(3) The upper limit for the warranty range shall be as specified in item (1) above and any damages (damage to or loss of machinery or equipment, or lost profits from the same, etc.) consequent to or resulting from breakdown of the purchased or delivered product shall be excluded from coverage by this warranty.

1-3 Trouble diagnosis

As a rule, the customer is requested to carry out a preliminary trouble diagnosis. However, at the customer's request, this company or its service network can perform the trouble diagnosis on a chargeable basis. In this case, the customer is asked to assume the burden for charges levied in accordance with this company's fee schedule.

2. Exclusion of Liability for Loss of Opportunity, etc.

Regardless of whether a breakdown occurs during or after the free of charge warranty period, this company shall not be liable for any loss of opportunity, loss of profits, or damages arising from special circumstances, secondary damages, accident compensation to another company, or damages to products other than this company's products, whether foreseen or not by this company, which this company is not be responsible for causing.

3. Repair Period after Production Stop, Spare Parts Supply Period (Holding Period)

Concerning models (products) which have gone out of production, this company will perform repairs for a period of 7 years after production stop, counting from the month and year when the production stop occurs. In addition, we will continue to supply the spare parts required for repairs for a period of 7 years, counting from the month and year when the production stop occurs. However, if it is estimated that the life cycle of certain electronic and other parts is short and it will be difficult to procure or produce those parts, there may be cases where it is difficult to provide repairs or supply spare parts even within this 7-year period. For details, please confirm at our company's business office or our service office.

4. Transfer Rights

In the case of standard products which do not include settings or adjustments in an application program, the products shall be transported to and transferred to the customer and this company shall not be responsible for local adjustments or trial operation.

5. Service Contents

The cost of purchased and delivered products does not include the cost of dispatching engineers or service costs. Depending on the request, these can be discussed separately.

6. Applicable Scope of Service

Please inquiry the supplier or Fuji Electric China for details of above.

SAFETY PRECAUTIONS

1. This catalog is intended for use in selecting required servo systems. Before actually using these products, carefully read their instruction manuals and understand their correct usage.
2. Products described in this catalog are neither designed nor manufactured for combined use with a system or equipment that will affect human lives.
   If you are considering using these products for special purposes, such as atomic energy control, aerospace, medical application, or traffic control, please consult our sales office.
3. If you use our product with equipment that is expected to cause serious injury or damage to your property in case of failure, be sure to take appropriate safety measures for the equipment.

Fuji Electric Co., Ltd.

Gate City Ohsaki, East Tower, 11-2,
Osaki 1-chome, Shinagawa-ku,
Tokyo 141-0032, Japan
Phone: +81-3-5435-7066 Fax: +81-3-5435-7475
URL: www.fujielectric.com/

Information in this catalog is subject to change without notice.

2021-05(E21d/F17)T00FOLS