AC Servo System 1S-series

R88M-1□/R88D-1SN□-ECT

Best Machine Architecture

- Simple installation and wiring contributes to board design efficiency
- EtherCAT Communications Cycle of 125 μs
- Achievement of Safety on EtherCAT Network
- Supports two-degree-of-freedom control
- Battery-free system reduces maintenance and space
- Comes equipped with a 23-bit ABS encoder
- 350% momentary maximum torque (200 V, 750 W max.)

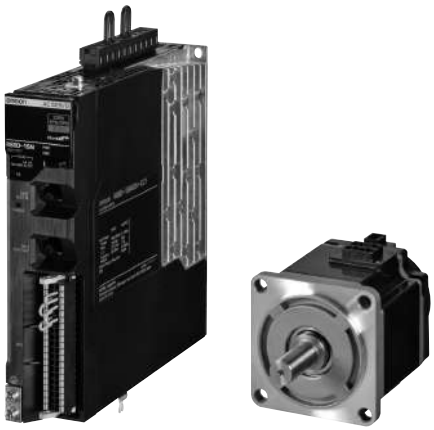

System Configuration

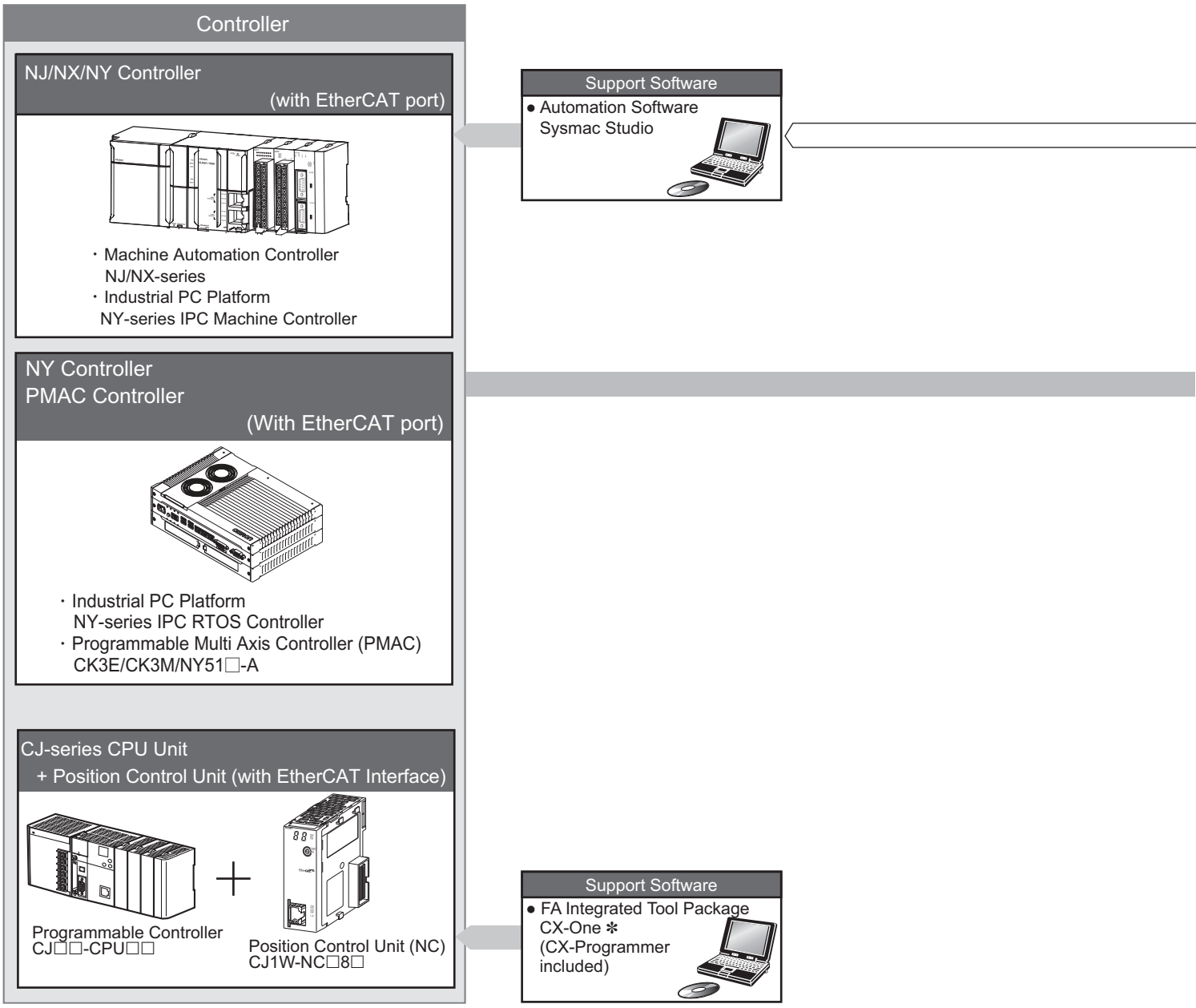

* You cannot use the CX-One to make the settings of 1S-series Servo Drives. Obtain the Sysmac Studio.
Note: PMAC is an abbreviation for Programmable Multi Axis Controller.

USB communications

EtherCAT communications

Servo Drive

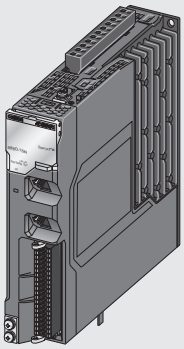

- 1S-series Servo Drive
  R88D-1SN□-ECT
  100 VAC
  200 VAC
  400 VAC

Power signal

Power cable

- Standard cable
  - Without brake wire
    R88A-CA1□□□□S
  - With brake wire
    R88A-CA1□□□□B
- Flexible cable
  - Without brake wire
    R88A-CA1□□□□SF
    R88A-CA1A□□□SFR
  - With brake wire
    R88A-CA1□□□□BF



- Extension Cable (Flexible)
  R88A-CX1□E□□BF

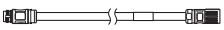

Brake cable for 750 W max.

- Standard cable
  R88A-CA1A□□□B
- Flexible cable
  R88A-CA1A□□□BF
  R88A-CA1A□□□BFR

Feedback signal

Encoder cable

- Standard cable
  R88A-CR1A□□□C
  R88A-CR1B□□□N
  R88A-CR1B□□□V
- Flexible cable
  R88A-CR1A□□□CF
  R88A-CR1B□□□NF
  R88A-CR1B□□□VF



Servomotor

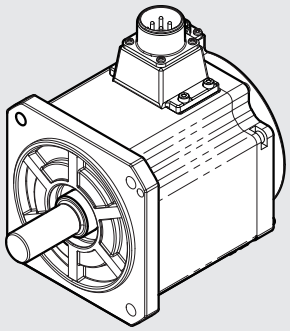

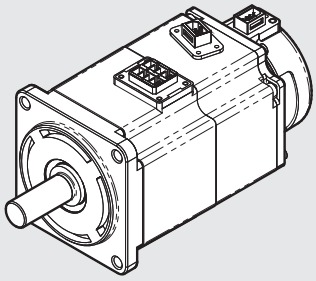

- 1S-series Servomotor
  R88M-1L□/-1M□
  3,000 r/min
  2,000 r/min
  1,500 r/min
  1,000 r/min

ABS

Decelerator

- Backlash: 3 Arcminutes Max.
  R88G-HPG□
- Backlash: 15 Arcminutes Max.
  R88G-VRXF□

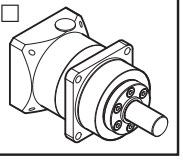

Note: See page 100 for cable part numbers.

R88D-1SN□-ECT

Contents

- Ordering Information
- Specifications
- EtherCAT Communication Specifications
- Version Information
- Names and Functions
- Dimensions

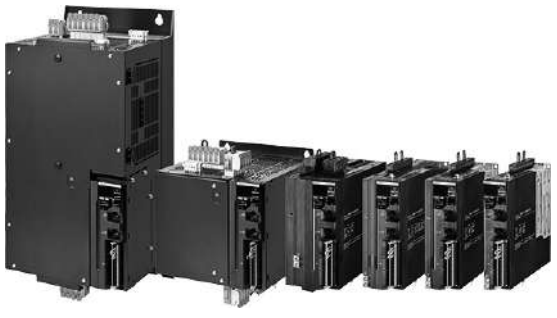

Ordering Information

Refer to the Ordering Information.

Specifications

General Specifications

Item			Specifications
Operating ambient temperature and humidity			0 to 55°C, 90% max. (with no condensation)
Storage ambient temperature and humidity			-20 to 65°C, 90% max. (with no condensation)
Operating and storage atmosphere			No corrosive gases
Operating altitude			1,000 m max.
Vibration resistance			10 to 60 Hz and at an acceleration of 5.88 m/s^2 or less (Not to be run continuously at the resonance frequency)
Insulation resistance			Between power supply terminals/power terminals and PE terminals: 0.5 MΩ min. (at 500 VDC)
Dielectric strength			Between power supply terminals/power terminals and PE terminals: 1,500 VAC for 1 min (at 50/60 Hz)
Protective structure			IP20 (Built into IP54 panel)
International standard	**EU Directives**	**EMC Directive**	EN 61800-3 second environment, C3 category (EN61326-3-1 *1; Functional Safety)
		Low Voltage Directive	EN 61800-5-1
		Machinery Directive	EN ISO 13849-1 (Cat.3), EN 61508, EN 62061, EN 61800-5-2
	UL standards		UL 61800-5-1
	CSA standards		CSA C22.2 No. 274
	Korean Radio Regulations (KC)		Compliant
	Australian EMC Labelling Requirements (RCM)		Compliant
	EAC requirements		Compliant
	SEMI standards		Can conform to the standard for momentary power interruptions (for no-load operation).
	Ship standards (NK/LR)		Not compliant

* The following product models are applicable to EN61000-6-7.
Applicable models: R88D-1SN55□-ECT, R88D-1SN75□-ECT, R88D-1SN150□-ECT

Note: The above items reflect individual evaluation testing. The results may differ under compound conditions.

The detail of Machinery Directive is as follows:
The STO function via safety input signals: EN ISO 13849-1 (Cat3 PLe), EN 61508 (SIL3), EN 62061 (SIL3), EN 61800-5-2 (STO)
The STO function via EtherCAT communications: EN ISO 13849-1 (Cat.3 PLd), EN 61508 (SIL2), EN 62061 (SIL2), EN 61800-5-2 (STO)

Precautions for Correct Use

Disconnect all connections to the Servo Drive before attempting a megger test (insulation resistance measurement) on a Servo Drive. Not doing so may result in the Servo Drive failure.
Do not perform a dielectric strength test on the Servo Drive. Internal elements may be damaged.

Characteristics

100-VAC Input Models

Servo Drive model (R88D-)			1SN01L-ECT	1SN02L-ECT	1SN04L-ECT
Item			100 W	200 W	400 W
Input	Main circuit	Power supply voltage	Single-phase 100 to 120 VAC (85 to 132 V) *1 Rise time 500 ms max. *2		
		Frequency	50/60 Hz (47.5 to 63 Hz) *1		
	Control circuit	Power supply voltage	24 VDC (21.6 to 26.4 V)		
		Current consumption *3	600 mA		
	Rated input current [A (rms)] (Main circuit power supply voltage: 120 VAC)	Single-phase	2.9	4.9	8.4
		3-phase	---	---	---
Output	Rated current [A (rms)]		1.5	2.5	4.8
	Maximum current [A (rms)]		4.7	8.4	14.7
Heat value [W]		Main circuit *4	14.8	23.4	33.1
		Control circuit	11	11	13.2
Applicable Servomotor rated output [W]			100	200	400
3,000-r/min Servomotor (R88M-)		Batteryless 23-bit ABS	1M05030S 1M10030S	1M20030S	1M40030S
Hold time at momentary power interruption (Main circuit power supply voltage: 100 VAC)			10 ms (Load condition: rated output) *5		
Weight [kg]			1.2	1.5	1.9

*1. The values outside parentheses indicate the rated value, and the values inside parentheses indicate the range of acceptable variation.
*2. If the power supply is turned ON slowly, a Regeneration Circuit Error Detected during Power ON (Error No. 14.02) may occur. Check that the power supply has a capacity sufficiently greater than the total capacity of the Servo Drive and the peripheral devices.
*3. Select a DC power supply in consideration of the current values that are specified in the current consumption.
The rated current value that is printed on the product nameplate is a condition to apply the 1S-series product for the UL/Low Voltage Directive. Therefore, you do not need to consider it when you select a DC power supply for each model.
*4. This is the maximum heating value in applicable Servomotors.
Refer to the table on the page 14 for the Heating Values of Applicable Servomotors.
*5. This hold time at momentary power interruption is that of the main circuit. In order to maintain power supply to the control circuit at momentary power interruption, use a DC power supply, which meets the following conditions, for the control power supply:
Reinforced insulation or double insulation, and the output hold time of 10 ms or more.

200-VAC Input Models

Servo Drive model (R88D-)			1SN01H-ECT	1SN02H-ECT	1SN04H-ECT	1SN08H-ECT
Item			100 W	200 W	400 W	750 W
Input	Main circuit	Power supply voltage	Single-phase and 3-phase 200 to 240 VAC (170 to 252 V) *1 Rise time 500 ms max. *2			
		Frequency	50/60 Hz (47.5 to 63 Hz) *1			
	Control circuit	Power supply voltage	24 VDC (21.6 to 26.4 V)			
		Current consumption *3	600 mA			
	Rated current [A (rms)] (Main circuit power supply voltage: 240 VAC)	Single-phase	1.8	2.7	4.6	7.3
		3-phase	1.0	1.5	2.7	4.0
Output	Rated current [A (rms)]		0.8	1.5	2.5	4.6
	Maximum current [A (rms)]		3.1	5.6	9.1	16.9
Heat value [W]		Main circuit *4	15.7/15.3 *5	15.2/14.6 *5	22.4/22.4 *5	40/39.7 *5
		Control circuit	11	11	11	13.2
Applicable Servomotor rated output [W]			100	200	400	750
3,000-r/min Servomotor (R88M-)		Batteryless 23-bit ABS	1M05030T 1M10030T	1M20030T	1M40030T	1M75030T
2,000-r/min Servomotor (R88M-)		Batteryless 23-bit ABS	---	---	---	---
1,000-r/min Servomotor (R88M-)		Batteryless 23-bit ABS	---	---	---	---
Hold time at momentary power interruption (Main circuit power supply voltage: 200 VAC)			10 ms (Load condition: rated output) *6			
Weight [kg]			1.2	1.2	1.5	2.0

Servo Drive model (R88D-)			1SN10H-ECT	1SN15H-ECT	1SN20H-ECT	1SN30H-ECT
Item			1 kW	1.5 kW	2 kW	3 kW
Input	Main circuit	Power supply voltage	3-phase 200 to 240 VAC (170 to 252 V) *1	Single-phase and 3-phase 200 to 240 VAC (170 to 252 V) *1	3-phase 200 to 240 VAC (170 to 252 V) *1	
			Rise time 500 ms max. *2			
		Frequency	50/60 Hz (47.5 to 63 Hz) *1			
	Control circuit	Power supply voltage	24 VDC (21.6 to 26.4 V)			
		Current consumption *3	600 mA	900 mA		
	Rated current [A (rms)] (Main circuit power supply voltage: 240 VAC)	Single-phase	---	15.7	---	---
		3-phase	5.8	9.0	13.0	15.9
Output	Rated current [A (rms)]		7.7	9.7	16.2	22.3
	Maximum current [A (rms)]		16.9	28.4	41.0	54.7
Heat value [W]		Main circuit *4	46.5	85.5/85.5 *5	128.9	167.5
		Control circuit	13.2	20.4	20.4	20.4
Applicable Servomotor rated output [W]			1,000	1,500	2,000	3,000
3,000-r/min Servomotor (R88M-)		Batteryless 23-bit ABS	1L1K030T	1L1K530T	1L2K030T	1L3K030T
2,000-r/min Servomotor (R88M-)		Batteryless 23-bit ABS	1M1K020T	1M1K520T	1M2K020T	1M3K020T
1,000-r/min Servomotor (R88M-)		Batteryless 23-bit ABS	1M90010T	---	1M2K010T	1M3K010T
Hold time at momentary power interruption (Main circuit power supply voltage: 200 VAC)			10 ms (Load condition: rated output) *6			
Weight [kg]			2.0	3.4	3.4	3.4

Servo Drive model (R88D-)			1SN55H-ECT	1SN75H-ECT	1SN150H-ECT
Item			5.5 kW	7.5 kW	15 kW
Input	Main circuit	Power supply voltage	3-phase 200 to 240 VAC (170 to 252 V) *1 Rise time 500 ms max. *2		
		Frequency	50/60 Hz (47.5 to 63 Hz) *1		
	Control circuit	Power supply voltage	24 VDC (21.6 to 26.4 V)		
		Current consumption *3	900 mA		1,200 mA
	Rated current [A (rms)] (Main circuit power supply voltage: 240 VAC)	3-phase	27.0	38.0	77.0
Output	Rated current [A (rms)]		28.6	42.0	70.0
	Maximum current [A (rms)]		84.8	113	169.7
Heat value [W]		Main circuit *4	320	360	610
		Control circuit	19.9		29.7
Applicable Servomotor rated output [W]			5,500	7,500	15,000
3,000-r/min Servomotor (R88M-)		Batteryless 23-bit ABS	1L4K030T 1L5K030T (Available soon)	---	---
2,000-r/min Servomotor (R88M-)		Batteryless 23-bit ABS	---	---	---
1,500-r/min Servomotor (R88M-)		Batteryless 23-bit ABS	1M4K015T (Available soon) 1M5K515T (Available soon)	1M7K515T	1M11K015T 1M15K015T
1,000-r/min Servomotor (R88M-)		Batteryless 23-bit ABS	---	---	---
Hold time at momentary power interruption (Main circuit power supply voltage: 200 VAC)			10 ms (Load condition: rated output) *6		
Weight [kg]			9.4	9.4	21

*1. The values outside parentheses indicate the rated value, and the values inside parentheses indicate the range of acceptable variation.
*2. If the power supply is turned ON slowly, a Regeneration Circuit Error Detected during Power ON (Error No. 14.02) may occur. Check that the power supply has a capacity sufficiently greater than the total capacity of the Servo Drive and the peripheral devices.
*3. Select a DC power supply in consideration of the current values that are specified in the current consumption.
The rated current value that is printed on the product nameplate is a condition to apply the 1S-series product for the UL/Low Voltage Directive. Therefore, you do not need to consider it when you select a DC power supply for each model.
*4. This is the maximum heating value in applicable Servomotors.
Refer to the table on the next page for the heating value of each applicable Servomotor.
*5. The first value is for single-phase input power and the second value is for 3-phase input power.
*6. This hold time at momentary power interruption is that of the main circuit. In order to maintain power supply to the control circuit at momentary power interruption, use a DC power supply, which meets the following conditions, for the control power supply:
Reinforced insulation or double insulation, and the output hold time of 10 ms or more.

400-VAC Input Models

Use a neutral grounded 400 VAC 3-phase power supply for the 400 VAC input models.

Servo Drive model (R88D-)			1SN06F-ECT	1SN10F-ECT	1SN15F-ECT	1SN20F-ECT
Item			600 W	1 kW	1.5 kW	2 kW
Input	Main circuit	Power supply voltage	3-phase 380 to 480 VAC (323 to 504 V) *1 Rise time 500 ms max. *2			
		Frequency	50/60 Hz (47.5 to 63 Hz) *1			
	Control circuit	Power supply voltage	24 VDC (21.6 to 26.4 V)			
		Current consumption *3	900 mA			
	Rated current [A (rms)] (Main circuit power supply voltage: 480 VAC)	3-phase	2.4	3.1	4.3	6.5
Output	Rated current [A (rms)]		1.8	4.1	4.7	7.8
	Maximum current [A (rms)]		5.5	9.6	14.1	19.8
Heat value [W]		Main circuit *4	20.2	52.1	77.5	106.8
		Control circuit	20.4	20.4	20.4	20.4
Applicable Servomotor rated output [W]			600	1,000	1,500	2,000
3,000-r/min Servomotor (R88M-)		Batteryless 23-bit ABS	---	1L75030C 1L1K030C	1L1K530C	1L2K030C
2,000-r/min Servomotor (R88M-)		Batteryless 23-bit ABS	1M40020C 1M60020C	1M1K020C	1M1K520C	1M2K020C
1,000-r/min Servomotor (R88M-)		Batteryless 23-bit ABS	---	1M90010C	---	1M2K010C
Hold time at momentary power interruption (Main circuit power supply voltage: 400 VAC)			10 ms (Load condition: rated output) *5			
Weight [kg]			3.4	3.4	3.4	3.4

Servo Drive model (R88D-)			1SN30F-ECT	1SN55F-ECT	1SN75F-ECT	1SN150F-ECT
Item			3kW	5.5kW	7.5kW	15kW
Input	Main circuit	Power supply voltage	3-phase 380 to 480 VAC (323 to 504 V) *1 Rise time 500 ms max. *2			
		Frequency	50/60 Hz (47.5 to 63 Hz) *1			
	Control circuit	Power supply voltage	24 VDC (21.6 to 26.4 V)			
		Current consumption *3	900 mA			1,200 mA
	Rated current [A (rms)] (Main circuit power supply voltage: 480 VAC)	3-phase	8.4	16.0	23.0	40.0
Output	Rated current [A (rms)]		11.3	14.5	22.6	33.9
	Maximum current [A (rms)]		28.3	42.4	56.5	84.8
Heat value [W]		Main circuit *4	143.3	280.0	280.0	440.0
		Control circuit	20.4	19.9		29.7
Applicable Servomotor rated output [W]			3,000	5,500	7,500	15,000
3,000-r/min Servomotor (R88M-)		Batteryless 23-bit ABS	1L3K030C	1L4K030C 1L5K030C	---	---
2,000-r/min Servomotor (R88M-)		Batteryless 23-bit ABS	1M3K020C	---	---	---
1,500-r/min Servomotor (R88M-)		Batteryless 23-bit ABS	---	1M4K015C 1M5K515C	1M7K515C	1M11K015C 1M15K015C
1,000-r/min Servomotor (R88M-)		Batteryless 23-bit ABS	1M3K010C	---	---	---
Hold time at momentary power interruption (Main circuit power supply voltage: 400 VAC)			10 ms (Load condition: rated output) *5			
Weight [kg]			3.4	9.4	9.4	21

*1. The values outside parentheses indicate the rated value, and the values inside parentheses indicate the range of acceptable variation.
*2. If the power supply is turned ON slowly, a Regeneration Circuit Error Detected during Power ON (Error No. 14.02) may occur. Check that the power supply has a capacity sufficiently greater than the total capacity of the Servo Drive and the peripheral devices.
*3. Select a DC power supply in consideration of the current values that are specified in the current consumption.
The rated current value that is printed on the product nameplate is a condition to apply the 1S-series product for the UL/Low Voltage Directive. Therefore, you do not need to consider it when you select a DC power supply for each model.
*4. This is the maximum heating value in applicable Servomotors.
Refer to the table below for the heating value of each applicable Servomotor.
*5. This hold time at momentary power interruption is that of the main circuit. In order to maintain power supply to the control circuit at momentary power interruption, use a DC power supply, which meets the following conditions, for the control power supply:
Reinforced insulation or double insulation, and the output hold time of 10 ms or more.

Relationship between Servo Drive, Servomotors and the Main Circuit Heating Value

Servo Drive model	Servomotor model	Main circuit heat value [W]
R88D-1SN01L-ECT	R88M-1M05030S-☐	11.2
	R88M-1M10030S-☐	14.8
R88D-1SN01H-ECT	R88M-1M05030T-☐	13.2/13.2 *
	R88M-1M10030T-☐	15.7/15.3 *
R88D-1SN10H-ECT	R88M-1L1K030T-☐	46.5
	R88M-1M1K020T-☐	37.7
	R88M-1M90010T-☐	42.9
R88D-1SN15H-ECT	R88M-1L1K530T-☐	85.5/85.5 *
	R88M-1M1K520T-☐	84/84 *
R88D-1SN20H-ECT	R88M-1L2K030T-☐	128.9
	R88M-1M2K020T-☐	91.3
	R88M-1M2K010T-☐	109.1
R88D-1SN30H-ECT	R88M-1L3K030T-☐	167.5
	R88M-1M3K020T-☐	125.5
	R88M-1M3K010T-☐	156.7
R88D-1SN55H-ECT	R88M-1L4K030T-☐	250
	R88M-1M4K015T-☐ (Available soon)	270
	R88M-1L5K030T-☐ (Available soon)	300
	R88M-1M5K515T-☐ (Available soon)	320
R88D-1SN75H-ECT	R88M-1M7K515T-☐	360
R88D-1SN150H-ECT	R88M-1M11K015T-☐	490
	R88M-1M15K015T-☐	610
R88D-1SN06F-ECT	R88M-1M40020C-☐	14.4
	R88M-1M60020C-☐	20.2
R88D-1SN10F-ECT	R88M-1L75030C-☐	51.1
	R88M-1L1K030C-☐	52.1
	R88M-1M1K020C-☐	33.4
	R88M-1M90010C-☐	40.2
R88D-1SN15F-ECT	R88M-1L1K530C-☐	77.5
	R88M-1M1K520C-☐	47.9
R88D-1SN20F-ECT	R88M-1L2K030C-☐	106.8
	R88M-1M2K020C-☐	65.7
	R88M-1M2K010C-☐	79.6
R88D-1SN30F-ECT	R88M-1L3K030C-☐	143.3
	R88M-1M3K020C-☐	96.5
	R88M-1M3K010C-☐	115.5
R88D-1SN55F-ECT	R88M-1L4K030C-☐	250
	R88M-1M4K015C-☐	280
	R88M-1L5K030C-☐	250
	R88M-1M5K515C-☐	280
R88D-1SN75F-ECT	R88M-1M7K515C-☐	280
R88D-1SN150F-ECT	R88M-1M11K015C-☐	390
	R88M-1M15K015C-☐	440

* The first value is for single-phase input power and the second value is for 3-phase input power.

EtherCAT Communications Specifications

Item	Specifications
Communications standard	IEC 61158 Type 12, IEC 61800-7 CiA 402 Drive Profile
Physical layer	100BASE-TX (IEEE802.3)
Connectors	RJ45 × 2 (shielded) ECAT IN: EtherCAT input ECAT OUT: EtherCAT output
Communications media	Recommended media: Twisted-pair cable, which is doubly shielded by the aluminum tape and braid, with Ethernet Category 5 (100BASE-TX) or higher
Communications distance	Distance between nodes: 100 m max.
Process data	Fixed PDO mapping Variable PDO mapping
Mailbox (CoE)	Emergency messages, SDO requests, SDO responses, and SDO information
Synchronization mode and communications cycle	DC Mode (Synchronous with Sync0 Event) Communications cycle: 125 µs, 250 µs, 500 µs, 750 µs, 1 to 10 ms (in 0.25 ms increments) Free Run Mode
Indicators	ECAT-L/A IN (Link/Activity IN) × 1 ECAT-L/A OUT (Link/Activity OUT) × 1 ECAT-RUN × 1 ECAT-ERR × 1
CiA 402 Drive Profile	• Cyclic synchronous position mode • Cyclic synchronous velocity mode • Cyclic synchronous torque mode • Profile position mode • Profile velocity mode • Homing mode • Touch probe function • Torque limit function

Version Information

1S-series Servo Drive		Corresponding version
Model	**Unit version**	**Sysmac Studio**
R88D-1SN□-ECT	Version 1.0	Version 1.16 or higher
	Version 1.1	Version 1.18 or higher
	Version 1.2	Version 1.22 or higher
	Version 1.3	Version 1.27 or higher

Functions That Were Added or Changed for Each Unit Version

Function		Addition/change	Unit version
Adjustment Function	Multiple Drives Tuning Function	Addition	Ver.1.1
Object	Machine - Inertia Ratio (3001-01 hex)	Change	Ver.1.1
	TDF Position Control - Command Following Gain Selection (3120-10 hex)	Addition	Ver.1.1
	TDF Position Control - Command Following Gain 2 (3120-11 hex)	Addition	Ver.1.1
	TDF Velocity Control - Command Following Gain Selection (3121-10 hex)	Addition	Ver.1.1
	TDF Velocity Control - Command Following Gain 2 (3121-11 hex)	Addition	Ver.1.1
	Command Dividing Function - Interpolation Method Selection in csp (3041-10 hex)	Addition	Ver.1.2
	Runaway Detection (3B71 hex)	Addition	Ver.1.1
	Function Output - Physical Outputs (4602-F1 hex)	Change	Ver.1.2
	External Brake Interlock Output (4663 hex)	Addition	Ver.1.2
	Digital outputs - Physical Outputs (60FE - 01 hex)	Change	Ver.1.2
Error detection function	Runaway Detection	Addition	Ver.1.1
	Synchronization Error	Change	Ver.1.1
	Regeneration Circuit Error Detected during Power ON	Addition	Ver.1.2
		Delete	Ver.1.3
	Inrush Current Prevention Circuit Error	Addition	Ver.1.3
	Regeneration Circuit Error	Addition	Ver.1.3
Applied Functions	Brake Interlock	Addition	Ver.1.2

Part Names

Servo Drive Part Names

R88D-1SN01L-ECT/-1SN02L-ECT/-1SN04L-ECT/-1SN01H-ECT/ -1SN02H-ECT/-1SN04H-ECT/-1SN08H-ECT/-1SN10H-ECT

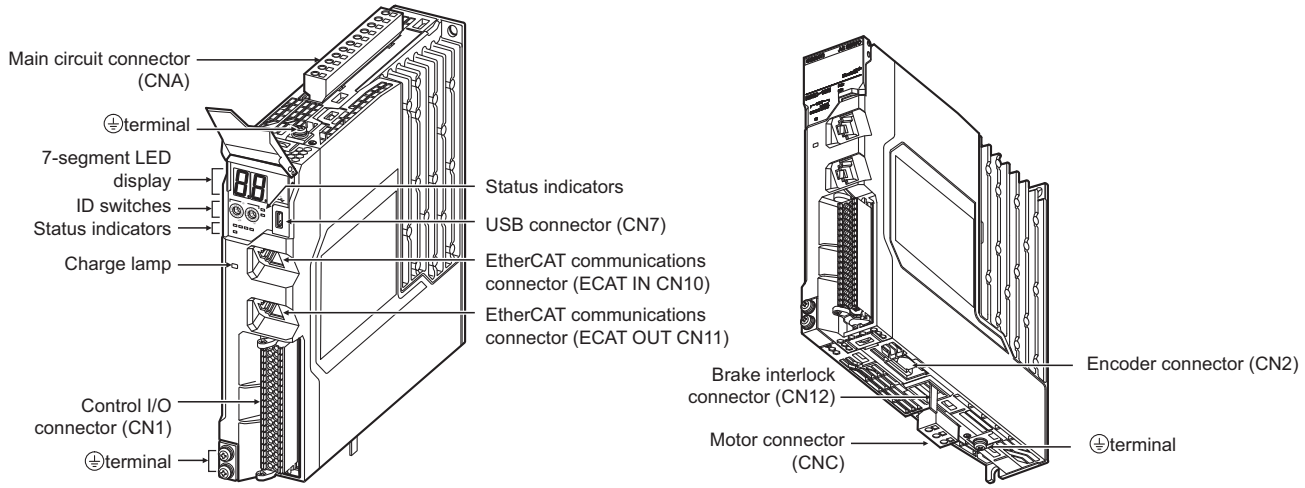

R88D-1SN15H-ECT/-1SN20H-ECT/-1SN30H-ECT/-1SN06F-ECT/ -1SN10F-ECT/-1SN15F-ECT/-1SN20F-ECT/-1SN30F-ECT

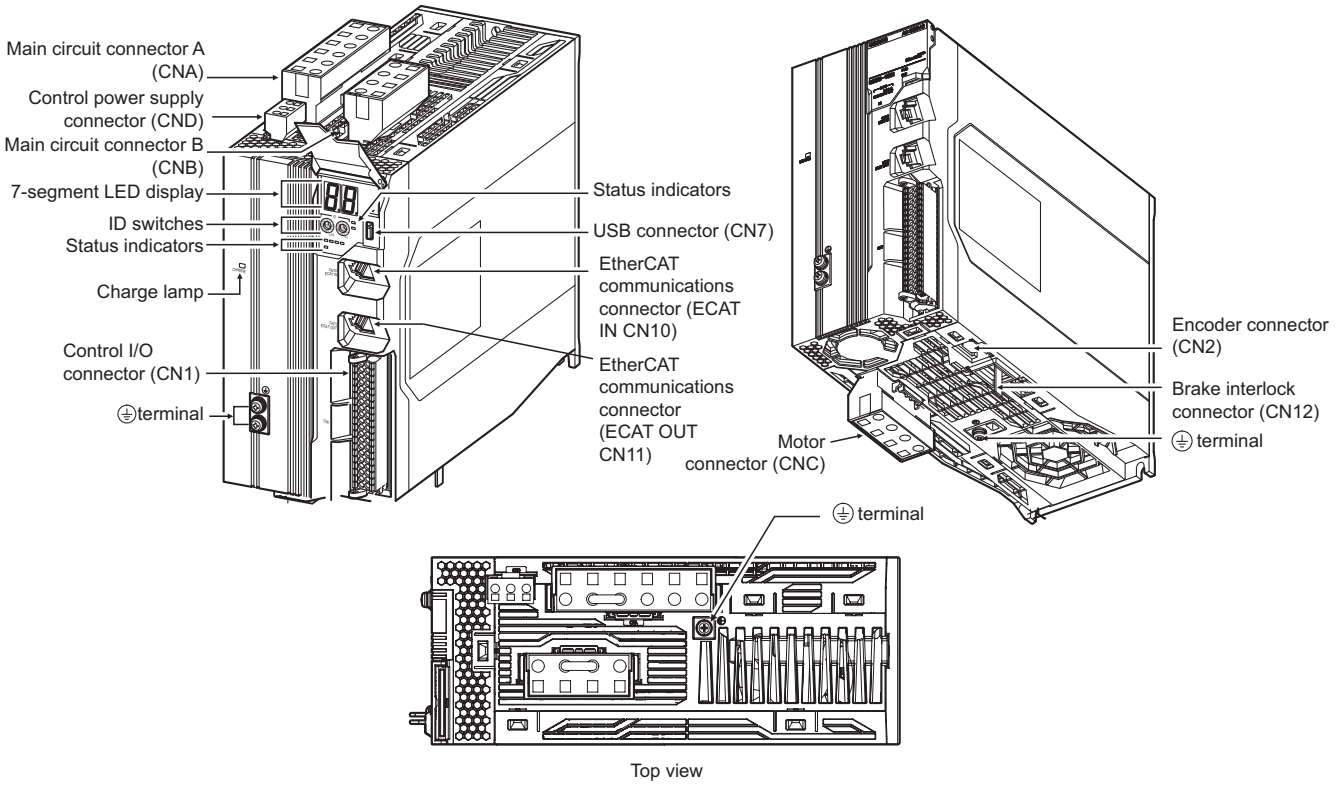

R88D-1SN55H-ECT/-1SN75H-ECT/-1SN55F-ECT/-1SN75F-ECT

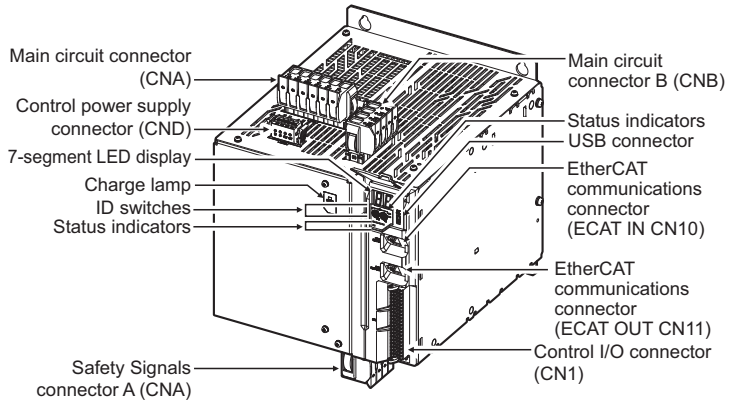

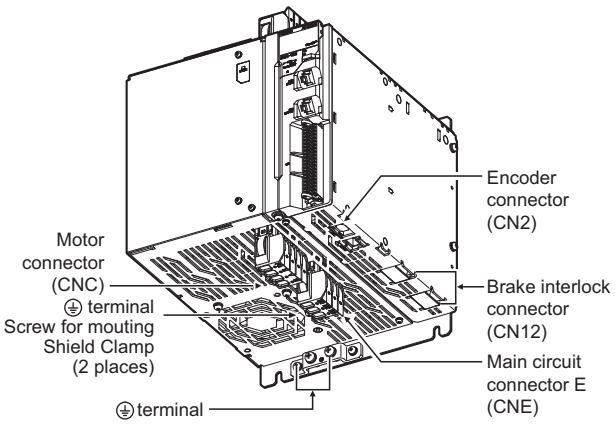

R88D-1SN150H-ECT

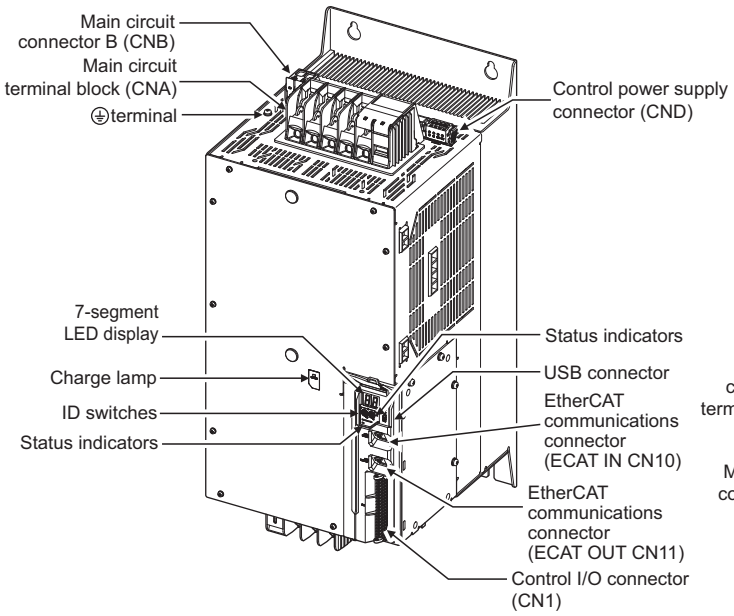

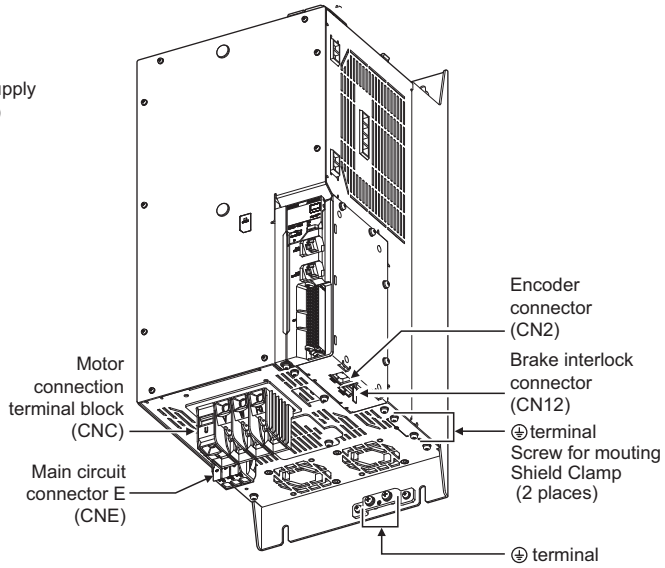

R88D-1SN150F-ECT

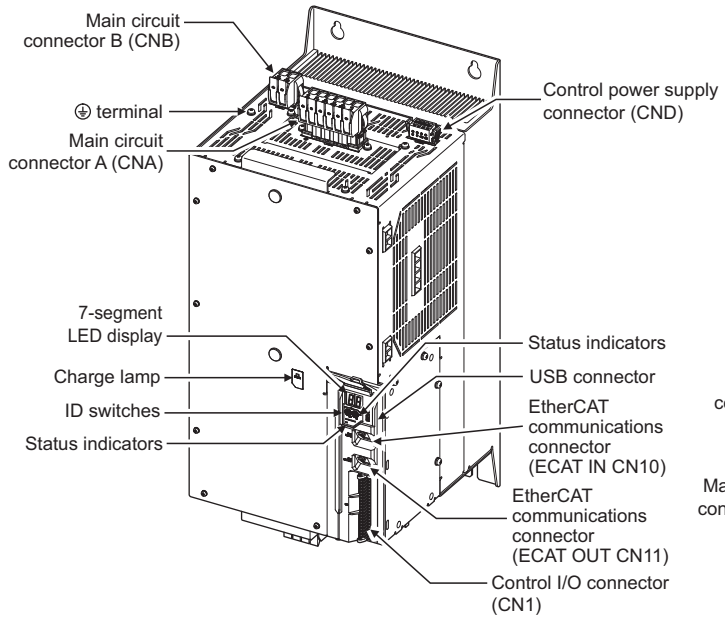

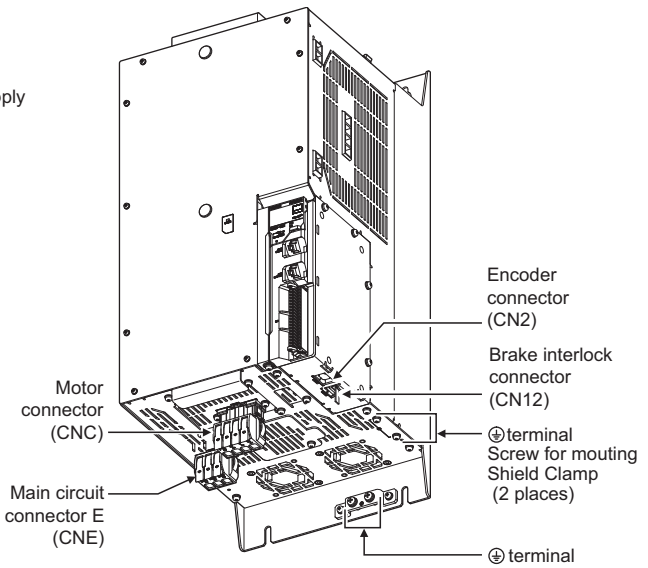

Servo Drive Functions

Status Indicators

The following seven indicators are mounted.

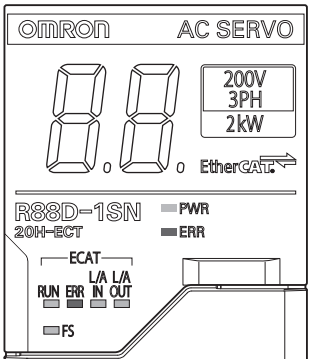

Name	Color	Description
PWR	Green	Displays the status of control power supply.
ERR	Red	Gives the Servo Drive error status.
ECAT-RUN	Green	Displays the EtherCAT communications status.
ECAT-ERR	Red	
ECAT-L/A IN, ECAT-L/A OUT	Green	Lights or flashes according to the status of a link in the EtherCAT physical layer.
FS	Red/green	Displays the safety communications status.

7-segment LED Display

A 2-digit 7-segment LED display shows error numbers, the Servo Drive status, and other information.

ID Switches

Two rotary switches (0 to F hex) are used to set the EtherCAT node address.

Charge Lamp

Lights when the main circuit power supply carries electric charge.

Control I/O Connector (CN1)

Used for command input signals, I/O signals, and as the safety device connector. The short-circuit wire is installed on the safety signals before shipment.

Encoder Connector (CN2)

Connector for the encoder installed in the Servomotor.

EtherCAT Communications Connectors (ECAT IN CN10, ECAT OUT CN11)

These connectors are for EtherCAT communications.

USB Connector (CN7)

USB-Micro B Communications connector for the computer. This connector enables USB 2.0 Full Speed (12 Mbps) communications.

Brake Interlock Connector (CN12)

Used for brake interlock signals.

Main Circuit Connector (CNA)

Connector for the main circuit power supply input, control power supply input, external regeneration resistor, and DC reactor.
Applicable models: R88D-1SN01L-ECT/-1SN02L-ECT/-1SN04L-ECT/-1SN01H-ECT/-1SN02H-ECT/-1SN04H-ECT/-1SN08H-ECT/-1SN10H-ECT

Main Circuit Connector A (CNA)

Connector for the main circuit power supply input and external regeneration resistor. The connector differs depending on the model.
Applicable models: R88D-1SN15H-ECT/-1SN20H-ECT/-1SN30H-ECT/-1SN55H-ECT/-1SN75H-ECT/-1SN06F-ECT/-1SN10F-ECT/
-1SN15F-ECT/ -1SN20F-ECT/-1SN30F-ECT/-1SN55F-ECT/-1SN75F-ECT

Main Circuit Terminal Block (CNA)

Connector for the main circuit power supply input.
Applicable models: R88D-1SN150H-ECT

Main Circuit Connector A (CNA)

Connector for the main circuit power supply input and AC reactor.
Applicable models: R88D-1SN150F-ECT

Main Circuit Connector B (CNB)

Connector for a DC reactor. The connector differs depending on the model.
Applicable models: R88D-1SN15H-ECT/-1SN20H-ECT/-1SN30H-ECT/-1SN55H-ECT/-1SN75H-ECT/-1SN06F-ECT/-1SN10F-ECT/
-1SN15F-ECT/ -1SN20F-ECT/-1SN30F-ECT/-1SN55F-ECT/-1SN75F-ECT

Main Circuit Connector B (CNB)

Connector for a external regeneration resistor.
Applicable models: R88D-1SN150H-ECT/ -1SN150F-ECT

Control Power Supply Connector (CND)

Connector for control power supply input. The connector differs depending on the model.
Applicable models: R88D-1SN15H-ECT/-1SN20H-ECT/-1SN30H-ECT/-1SN55H-ECT/-1SN75H-ECT/-1SN150H-ECT/-1SN06F-ECT/
-1SN10F-ECT/-1SN15F-ECT/-1SN20F-ECT/-1SN30F-ECT/-1SN55F-ECT/-1SN75F-ECT/-1SN150F-ECT

Motor Connector (CNC)

Connector for the power line to the phase U, V, and W of the Servomotor. The connector differs depending on the model.

Motor Connection Terminal Block (CNC)

Connector for the power line to the phase U, V, and W of the Servomotor.
Applicable models: R88D-1SN150H-ECT

Main Circuit Connector E (CNE)

Connector for a External Dynamic Brake Resistor.
Applicable models: R88D-1SN55H-ECT/-1SN75H-ECT/-1SN150H-ECT/-1SN55F-ECT/-1SN75F-ECT/-1SN150F-ECT

⏚ Terminal

The number of ⏚ terminals of the Servo Drives and their connection targets are as follows.

Model	Number of ⏚ terminals	Connection to
R88D-1SN01L-ECT/-1SN02L-ECT/-1SN04L-ECT/ -1SN01H-ECT/-1SN02H-ECT/-1SN04H-ECT/ -1SN08H-ECT/-1SN10H-ECT	1 on top	PE wire of the main circuit power supply cable. FG wire inside the control panel, and FG wire for the motor cable and shielded wire.
	2 on front	
	1 on bottom	
R88D-1SN15H-ECT/-1SN20H-ECT/-1SN30H-ECT/ -1SN06F-ECT/-1SN10F-ECT/-1SN15F-ECT/ -1SN20F-ECT/-1SN30F-ECT	1 on top	PE wire of the main circuit power supply cable. FG wire inside the control panel and the motor cable shielded wire.
	2 on front	
	1 on bottom	
R88D-1SN55H-ECT/-1SN75H-ECT/ -1SN150H-ECT/ -1SN55F-ECT/ -1SN75F-ECT/-1SN150F-ECT	1 on top	PE wire of the main circuit power supply cable. FG wire inside the control panel and the motor cable shielded wire.
	2 on front	
	2 on bottom	

Dimensions

(Unit: mm)

Single-phase 100 VAC: R88D-1SN01L-ECT (100 W)
Single-phase/3-phase 200 VAC: R88D-1SN01H-ECT/-1SN02H-ECT (100 to 200 W)

External dimensions

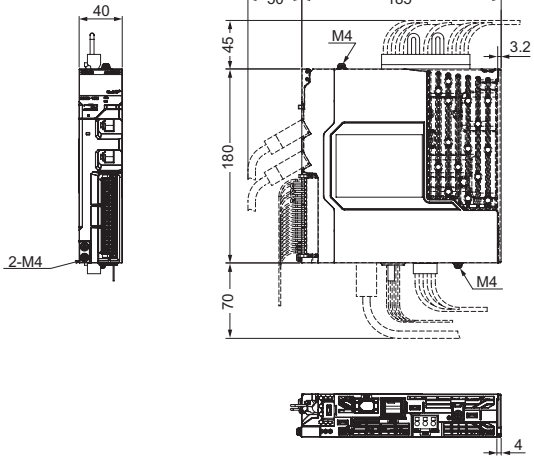

Mounting dimensions

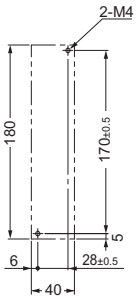

Single-phase 100 VAC: R88D-1SN02L-ECT (200 W)
Single-phase/3-phase 200 VAC: R88D-1SN04H-ECT (400 W)

External dimensions

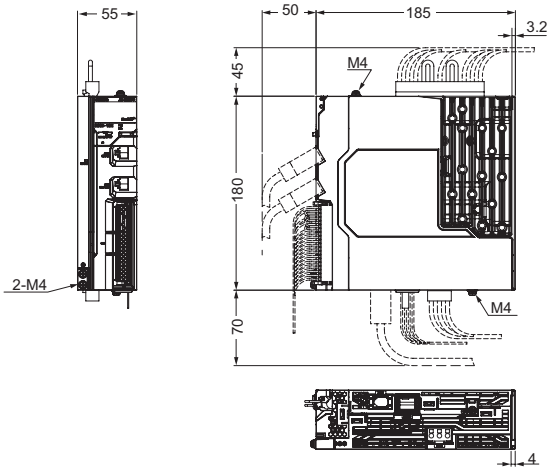

Mounting dimensions

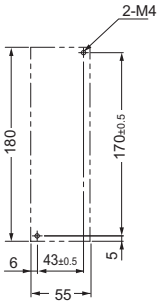

Single-phase 100 VAC: R88D-1SN04L-ECT (400 W)
Single-phase/3-phase 200 VAC: R88D-1SN08H-ECT (750 W)
3-phase 200 VAC: R88D-1SN10H-ECT (1 kW)

External dimensions

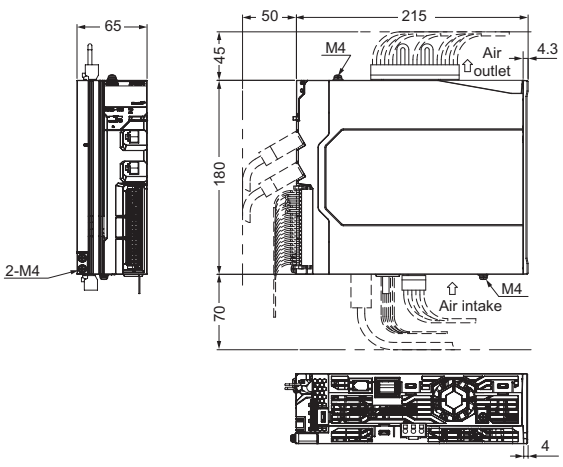

Mounting dimensions

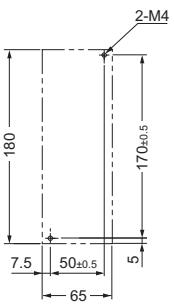

Single-phase/3-phase 200 VAC: R88D-1SN15H-ECT (1.5 kW)
3-phase 200 VAC: R88D-1SN20H-ECT/-1SN30H-ECT (2 to 3 kW)
3-phase 400 VAC: R88D-1SN06F-ECT/-1SN10F-ECT/-1SN15F-ECT/-1SN20F-ECT/-1SN30F-ECT (600 W to 3 kW)

External dimensions **Mounting dimensions**

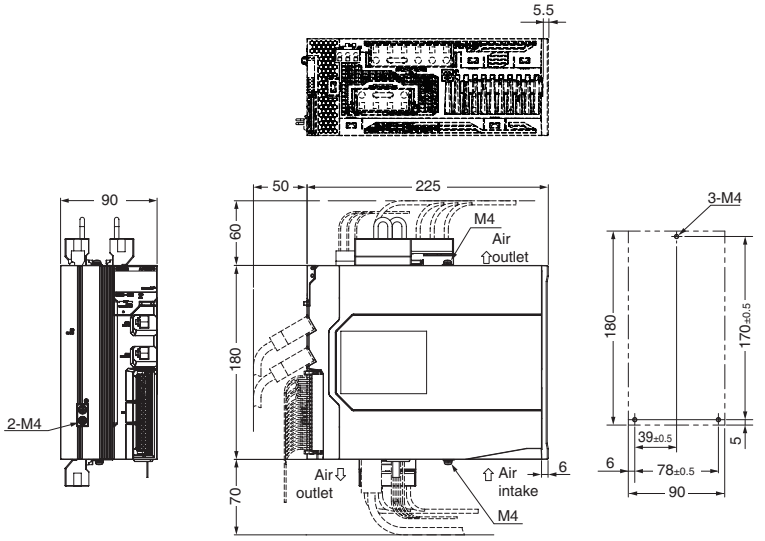

3-phase 200 VAC: R88D-1SN55H-ECT/-1SN75H-ECT (5.5 to 7.5 kW)
3-phase 400 VAC: R88D-1SN55F-ECT/-1SN75F-ECT (5.5 to 7.5kW)

External dimensions **Mounting dimensions**

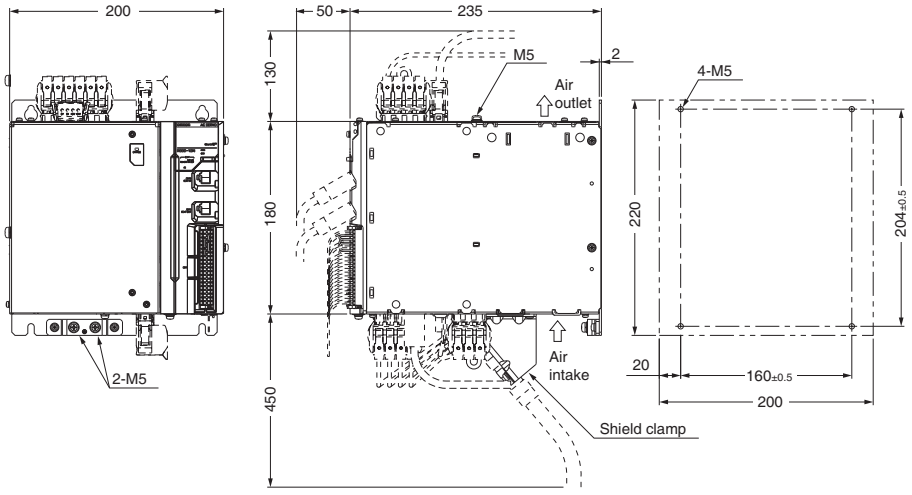

3-phase 200 VAC: R88D-1SN150H-ECT (15 kW)

External dimensions

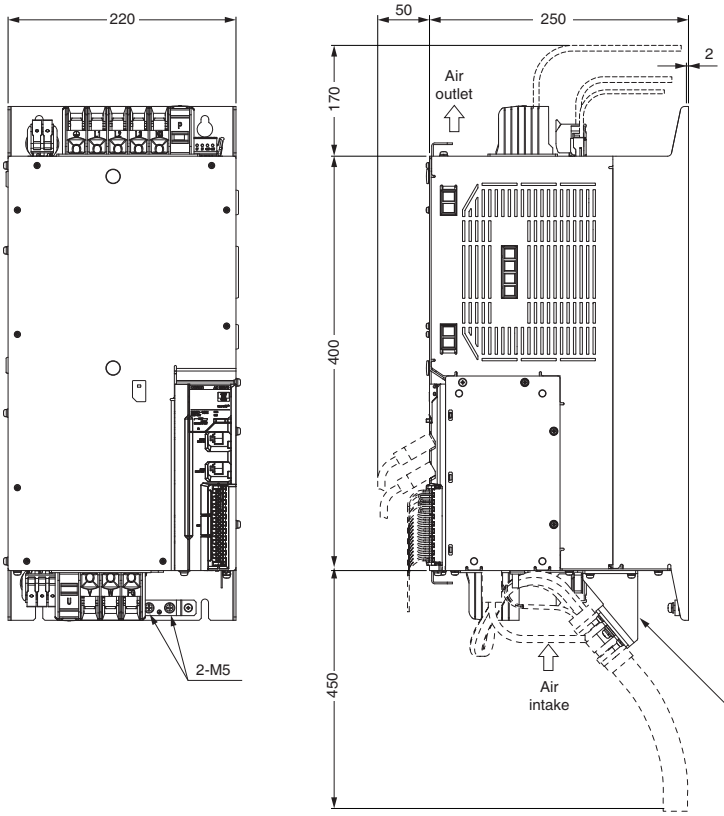

Mounting dimensions

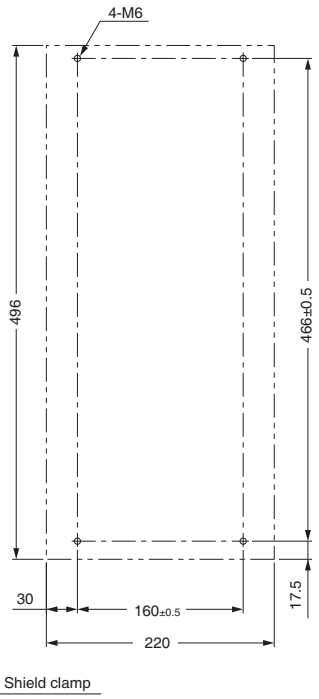

3-phase 400 VAC: R88D-1SN150F-ECT (15 kW)

External dimensions

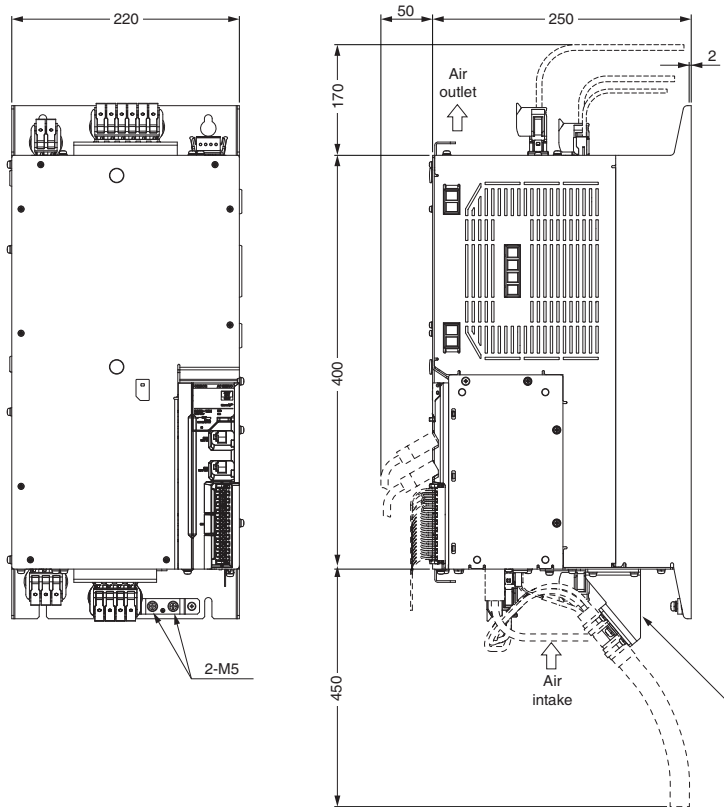

Mounting dimensions

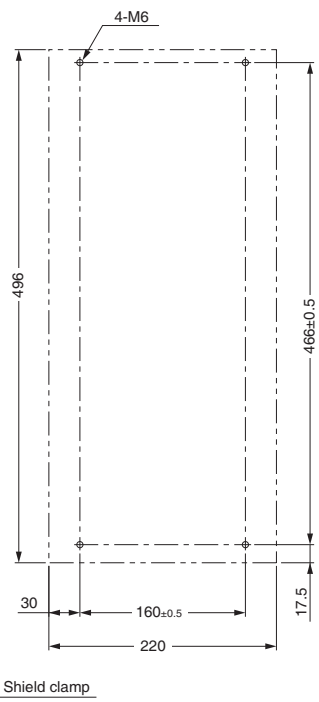

R88M-1L□/-1M□

Contents

- Ordering Information
- Specifications
- Names and Functions
- External Dimensions



Ordering Information

Refer to the Ordering Information.

Specifications

General Specifications

Item			Specifications
Operating ambient temperature and humidity			0 to 40°C 20% to 90% (with no condensation)
Storage ambient temperature and humidity			-20 to 65°C 20% to 90% (with no condensation)
Operating and storage atmosphere			No corrosive gases
Vibration resistance *1			Acceleration of 49 m/s^2 *2 24.5 m/s^2 max. in X, Y, and Z directions when the motor is stopped
Impact resistance			Acceleration of 98 m/s^2 max. 3 times each in X, Y, and Z directions
Insulation resistance			Between power terminals and FG terminals: 10 MΩ min. (at 500 VDC Megger)
Dielectric strength			Between power terminals and FG terminals: 1,500 VAC for 1 min (voltage 100 V, 200 V) Between power terminals and FG terminals: 1,800 VAC for 1 min (voltage 400 V) Between brake terminal and FG terminals: 1,000 VAC for 1 min
Insulation class			Class F
Protective structure			IP67 (except for the through-shaft part and connector pins) IP20 if you use a 30-meter or longer encoder cable.
International standard	**EU Directives**	**Low Voltage Directive**	EN 60034-1/-5
	UL standards		UL 1004-1/-6
	CSA standards		CSA C22.2 No.100 (with cUR mark)

*1. The amplitude may be increased by machine resonance. As a guideline, 80% of the specified value must not be exceeded.
*2. 24.5 m/s^2 for servomotors of 7.5 kW or more.

Note: 1. Do not use the cable when it is laying in oil or water.
2. Do not expose the cable outlet or connections to stress due to bending or its own weight.

Encoder Specifications

Item	Specifications
Encoder system	Optical batteryless absolute encoder
Resolution per rotation	23 bits
Multi-rotation data hold	16 bits
Power supply voltage	5 VDC±10%
Current consumption	230 mA max.
Output signal	Serial communications
Output interface	RS485 compliant

Note: It is possible to use an absolute encoder as an incremental encoder.
Refer to the *AC Servomotors/Servo Drives 1S-series with Built-in EtherCAT® Communications User's Manual* (Cat.No.I586) for details.

Characteristics

3,000-r/min Servomotors

Item		Model (R88M-) / Unit	100 VAC			
			1M05030S	1M10030S	1M20030S	1M40030S
Rated output *1 *2		W	50	100	200	400
Rated torque *1 *2		N·m	0.159	0.318	0.637	1.27
Rated rotation speed *1 *2		r/min	3,000			
Maximum rotation speed		r/min	6,000			
Momentary maximum torque *1		N·m	0.48	0.95	1.91	3.8
Rated current *1 *2		A (rms)	1.20	1.50	2.50	4.8
Momentary maximum current *1		A (rms)	4.00	4.70	8.40	14.7
Rotor inertia	Without brake	× 10^{-4} kg·m^2	0.0418	0.0890	0.2232	0.4452
	With brake	× 10^{-4} kg·m^2	0.0496	0.0968	0.2832	0.5052
Applicable load inertia		× 10^{-4} kg·m^2	0.810	1.62	4.80	8.40
Torque constant *1		N·m/ A (rms)	0.14	0.24	0.28	0.30
Power rate *1 *3		kW/s	6.7	11.9	18.5	36.6
Mechanical time constant *3		ms	1.7	1.1	0.76	0.61
Electrical time constant		ms	0.67	0.84	2.4	2.4
Allowable radial load *4		N	68	68	245	245
Allowable thrust load *4		N	58	58	88	88
Weight	Without brake	kg	0.35	0.52	1.0	1.4
	With brake	kg	0.59	0.77	1.3	1.9
Radiator plate dimensions (material)		mm	250 × 250 × t6 (aluminum)			
Brake specifications *5	Excitation voltage *6	V	24 VDC±10%			
	Current consumption (at 20°C)	A	0.27	0.27	0.32	0.32
	Static friction torque	N·m	0.32 min.	0.32 min.	1.37 min.	1.37 min.
	Attraction time	ms	25 max.	25 max.	30 max.	30 max.
	Release time *7	ms	15 max.	15 max.	20 max.	20 max.
	Backlash	°	1.2 max.	1.2 max.	1.2 max.	1.2 max.
	Allowable braking work	J	9	9	60	60
	Allowable total work	J	9000	9,000	60,000	60,000
	Allowable angular acceleration	rad/s^2	10,000 max.			
	Brake lifetime (acceleration/ deceleration)	---	10 million times min.			
	Insulation class	---	Class F			

For models with an oil seal, the following derating is used due to increase in friction torque.

Item	Model (R88M-) / Unit	1M05030S-O/ -OS2/ -BO/ -BOS2	1M10030S-O/ -OS2/ -BO/ -BOS2	1M20030S-O/ -OS2/ -BO/ -BOS2	1M40030S-O/ -OS2/ -BO/ -BOS2
Derating rate	%	90	95	95	80
Rated output	W	45	95	190	320
Rated current	A (rms)	1.20	1.50	2.50	4.0

Item		Model (R88M-) / Unit	200 VAC				
			1M05030T	1M10030T	1M20030T	1M40030T	1M75030T
Rated output *1 *2		W	50	100	200	400	750
Rated torque *1 *2		N·m	0.159	0.318	0.637	1.27	2.39
Rated rotation speed *1 *2		r/min	3,000				
Maximum rotation speed		r/min	6,000				
Momentary maximum torque *1		N·m	0.56	1.11	2.2	4.5	8.4
Rated current *1 *2		A (rms)	0.67	0.84	1.5	2.5	4.6
Momentary maximum current *1		A (rms)	2.60	3.10	5.6	9.1	16.9
Rotor inertia	Without brake	$\times 10^{-4}$ kg·m^2	0.0418	0.0890	0.2232	0.4452	1.8242
	With brake	$\times 10^{-4}$ kg·m^2	0.0496	0.0968	0.2832	0.5052	2.0742
Applicable load inertia		$\times 10^{-4}$ kg·m^2	0.810	1.62	4.80	8.40	19.4
Torque constant *1		N·m/ A (rms)	0.25	0.42	0.48	0.56	0.59
Power rate *1 *3		kW/s	6.7	11.9	18.5	36.6	31.4
Mechanical time constant *3		ms	1.7	1.2	0.78	0.56	0.66
Electrical time constant		ms	0.67	0.83	2.4	2.6	3.3
Allowable radial load *4		N	68	68	245	245	490
Allowable thrust load *4		N	58	58	88	88	196
Weight	Without brake	kg	0.35	0.52	1.0	1.4	2.9
	With brake	kg	0.59	0.77	1.3	1.9	3.9
Radiator plate dimensions (material)		mm	250 × 250 × t6 (aluminum)				
Brake specifications *5	Excitation voltage *6	V	24 VDC±10%				
	Current consumption (at 20°C)	A	0.27	0.27	0.32	0.32	0.37
	Static friction torque	N·m	0.32 min.	0.32 min.	1.37 min.	1.37 min.	2.55 min.
	Attraction time	ms	25 max.	25 max.	30 max.	30 max.	40 max.
	Release time *7	ms	15 max.	15 max.	20 max.	20 max.	35 max.
	Backlash	°	1.2 max.	1.2 max.	1.2 max.	1.2 max.	1.0 max.
	Allowable braking work	J	9	9	60	60	250
	Allowable total work	J	9000	9,000	60,000	60,000	250,000
	Allowable angular acceleration	rad/s^2	10,000 max.				
	Brake lifetime (acceleration/ deceleration)	---	10 million times min.				
	Insulation class	---	Class F				

For models with an oil seal, the following derating is used due to increase in friction torque.

Item	Model (R88M-) / Unit	1M05030T-O/ -OS2/ -BO/ -BOS2	1M10030T-O/ -OS2/ -BO/ -BOS2	1M20030T-O/ -OS2/ -BO/ -BOS2	1M40030T-O/ -OS2/ -BO/ -BOS2	1M75030T-O/ -OS2/ -BO/ -BOS2
Derating rate	%	90	95	95	80	90
Rated output	W	45	95	190	320	675
Rated current	A (rms)	0.67	0.84	1.5	2.1	4.2

Item		Model (R88M-) / Unit	200 VAC					
			1L1K030T	1L1K530T	1L2K030T	1L3K030T	1L4K030T	1L4K730T
Rated output *1 *2		**W**	1,000	1,500	2,000	3,000	4,000	4,700
Rated torque *1 *2		**N·m**	3.18	4.77	6.37	9.55	12.7	15.0
Rated rotation speed *1 *2		**r/min**	3,000					
Maximum rotation speed		**r/min**	5,000					
Momentary maximum torque *1		**N·m**	9.55	14.3	19.1	28.7	38.2	47.7
Rated current *1 *2		**A (rms)**	5.2	8.8	12.5	17.1	22.8	25.7
Momentary maximum current *1		**A (rms)**	16.9	28.4	41.0	54.7	74	84.8
Rotor inertia	**Without brake**	**× 10^{-4} kg·m^2**	2.1042	2.1042	2.4042	6.8122	8.8122	10.6122
	With brake	**× 10^{-4} kg·m^2**	2.5542	2.5542	2.8542	7.3122	11.3122	13.1122
Applicable load inertia		**× 10^{-4} kg·m^2**	35.3	47.6	60.2	118	213	279
Torque constant *1		**N·m/ A (rms)**	0.67	0.58	0.56	0.64	0.63	0.65
Power rate *1 *3		**kW/s**	48	108	169	134	183	209
Mechanical time constant *3		**ms**	0.58	0.58	0.50	0.47	0.37	0.37
Electrical time constant		**ms**	5.9	6.1	6.4	11	12	12
Allowable radial load *4		**N**	490				880	
Allowable thrust load *4		**N**	196				343	
Weight	**Without brake**	**kg**	5.7	5.7	6.4	11.5	13.5	16
	With brake	**kg**	7.4	7.4	8.1	12.5	16	18.5
Radiator plate dimensions (material)		**mm**	400 × 400 × t20 (aluminum)		470 × 470 × t20 (aluminum)			540 × 540 × t20 (aluminum)
Brake specifications *5	**Excitation voltage** *6	**V**	24 VDC±10%					
	Current consumption (at 20°C)	**A**	0.70	0.70	0.70	0.66	0.6	0.6
	Static friction torque	**N·m**	9.3 min.	9.3 min.	9.3 min.	12.0 min.	16 min.	16 min.
	Attraction time	**ms**	100 max.	100 max.	100 max.	100 max.	150 max.	150 max.
	Release time *7	**ms**	30 max.	30 max.	30 max.	30 max.	50 max.	50 max.
	Backlash	**°**	1.0 max.	1.0 max.	1.0 max.	0.8 max.	0.6 max.	0.6 max.
	Allowable braking work	**J**	500	500	500	1,000	350	350
	Allowable total work	**J**	900,000	900,000	900,000	3,000,000	1,000,000	1,000,000
	Allowable angular acceleration	**rad/s^2**	10,000 max.					
	Brake lifetime (acceleration/ deceleration)	**---**	10 million times min.					
	Insulation class	**---**	Class F					

Item		Model (R88M-) / Unit	400 VAC		
			1L75030C	1L1K030C	1L1K530C
Rated output *1 *2		W	750	1,000	1,500
Rated torque *1 *2		N·m	2.39	3.18	4.77
Rated rotation speed *1 *2		r/min	3,000		
Maximum rotation speed		r/min	5,000		
Momentary maximum torque *1		N·m	7.16	9.55	14.3
Rated current *1 *2		A (rms)	3.0	3.0	4.5
Momentary maximum current *1		A (rms)	9.6	9.6	14.1
Rotor inertia	Without brake	× 10^{-4} kg·m^2	1.3042	2.1042	2.1042
	With brake	× 10^{-4} kg·m^2	1.7542	2.5542	2.5542
Applicable load inertia		× 10^{-4} kg·m^2	38.6	35.3	47.6
Torque constant *1		N·m/ A (rms)	0.91	1.17	1.17
Power rate *1 *3		kW/s	44	48	108
Mechanical time constant *3		ms	1.09	0.6	0.58
Electrical time constant		ms	4.3	5.9	5.9
Allowable radial load *4		N	490		
Allowable thrust load *4		N	196		
Weight	Without brake	kg	4.1	5.7	5.7
	With brake	kg	5.8	7.4	7.4
Radiator plate dimensions (material)		mm	305 × 305 × t20 (aluminum)	400 × 400 × t20 (aluminum)	
Brake specifications *5	Excitation voltage *6	V	24 VDC±10%		
	Current consumption (at 20°C)	A	0.70	0.70	0.70
	Static friction torque	N·m	9.3 min.	9.3 min.	9.3 min.
	Attraction time	ms	100 max.	100 max.	100 max.
	Release time *7	ms	30 max.	30 max.	30 max.
	Backlash	°	1.0 max.	1.0 max.	1.0 max.
	Allowable braking work	J	500	500	500
	Allowable total work	J	900,000	900,000	900,000
	Allowable angular acceleration	rad/s^2	10,000 max.		
	Brake lifetime (acceleration/ deceleration)	---	10 million times min.		
	Insulation class	---	Class F		

Item		Model (R88M-) / Unit	400 VAC			
			1L2K030C	1L3K030C	1L4K030C	1L5K030C
Rated output *1 *2		**W**	2,000	3,000	4,000	5,000
Rated torque *1 *2		**N·m**	6.37	9.55	12.7	15.9
Rated rotation speed *1 *2		**r/min**	3,000			
Maximum rotation speed		**r/min**	5,000			
Momentary maximum torque *1		**N·m**	19.1	28.7	38.2	47.7
Rated current *1 *2		**A (rms)**	6.3	8.7	12.8	13.6
Momentary maximum current *1		**A (rms)**	19.8	27.7	42.4	42.4
Rotor inertia	**Without brake**	**× 10^{-4} kg·m^2**	2.4042	6.8122	8.8122	10.6122
	With brake	**× 10^{-4} kg·m^2**	2.8542	7.3122	11.3122	13.1122
Applicable load inertia		**× 10^{-4} kg·m^2**	60.2	118	213	279
Torque constant *1		**N·m/ A (rms)**	1.15	1.23	1.11	1.32
Power rate *1 *3		**kW/s**	169	134	183	238
Mechanical time constant *3		**ms**	0.52	0.49	0.36	0.35
Electrical time constant		**ms**	6.3	11	12	13
Allowable radial load *4		**N**	490		880	
Allowable thrust load *4		**N**	196		343	
Weight	**Without brake**	**kg**	6.4	11.5	13.5	16
	With brake	**kg**	8.1	12.5	16	18.5
Radiator plate dimensions (material)		**mm**	470 × 470 × t20 (aluminum)			540 × 540 × t20 (aluminum)
Brake specifications *5	**Excitation voltage** *6	**V**	24 VDC±10%			
	Current consumption (at 20°C)	**A**	0.70	0.66	0.6	0.6
	Static friction torque	**N·m**	9.3 min.	12 min.	16 min.	16 min.
	Attraction time	**ms**	100 max.	100 max.	150 max.	150 max.
	Release time *7	**ms**	30 max.	30 max.	50 max.	50 max.
	Backlash	**°**	1.0 max.	0.8 max.	0.6 max.	0.6 max.
	Allowable braking work	**J**	500	1,000	350	350
	Allowable total work	**J**	900,000	3,000,000	1,000,000	1,000,000
	Allowable angular acceleration	**rad/s^2**	10,000 max.			
	Brake lifetime (acceleration/ deceleration)	**---**	10 million times min.			
	Insulation class	**---**	Class F			

*1. This is a typical value for when the Servomotor is used at a normal temperature (20°C, 65%) in combination with a Servo Drive.
*2. The rated values are the values with which continuous operation is possible at an ambient temperature of 40°C when the Servomotor is horizontally installed on a specified radiator plate.
*3. This value is for models without options.
*4. The allowable radial and thrust loads are the values determined for a limit of 20,000 hours at normal operating temperatures. The allowable radial loads are applied as shown in the following diagram.

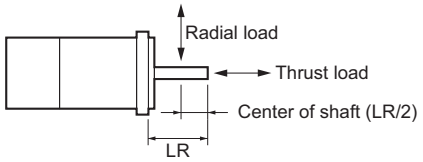

*5. When the brake is released for a vertical axis, refer to the *AC Servomotors/Servo Drives 1S-series with Built-in EtherCAT® Communications User's Manual* (Cat.No.I586) to set an appropriate value for Brake Interlock Output (4610 hex).
*6. This is a non-excitation brake. It is released when excitation voltage is applied.
*7. This value is a reference value.

Torque-Rotation Speed Characteristics for 3,000-r/min Servomotors (100 VAC)

The following graphs show the characteristics with a 3-m standard cable and a 100 VAC input.

• R88M-1M05030S

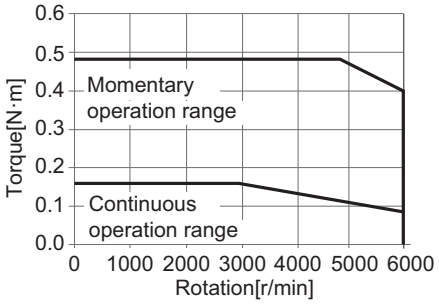

• R88M-1M10030S

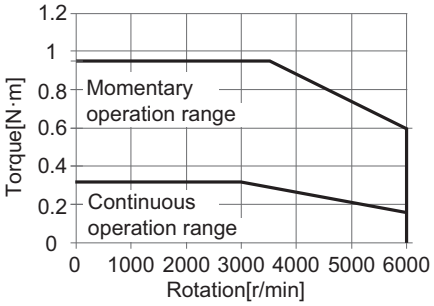

• R88M-1M20030S

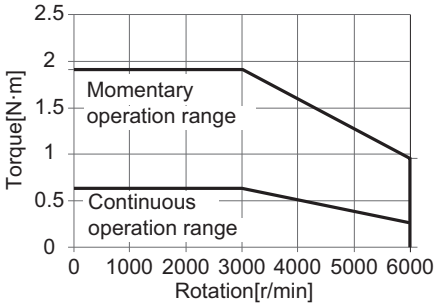

• R88M-1M40030S

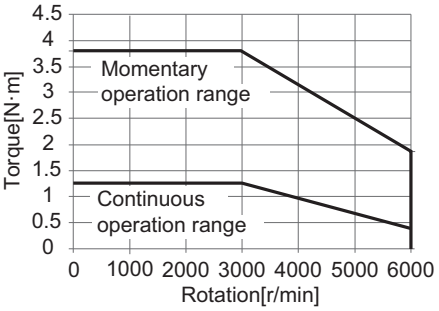

Note: The continuous operation range is the range in which continuous operation is possible at an ambient temperature of 40°C when the Servomotor is horizontally installed on a specified radiator plate.
Continuous operation at the maximum speed is also possible. However, doing so will reduce the output torque.

Torque-Rotation Speed Characteristics for 3,000-r/min Servomotors (200 VAC)

The following graphs show the characteristics with a 3-m standard cable and a 3-phase 200-VAC or single-phase 220-VAC input.

• R88M-1M05030T

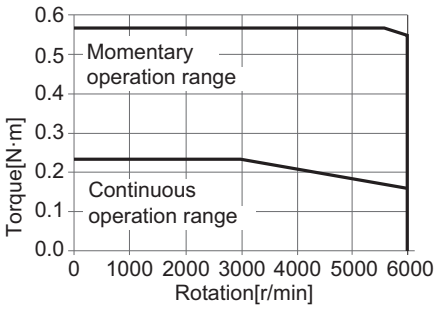

• R88M-1M10030T

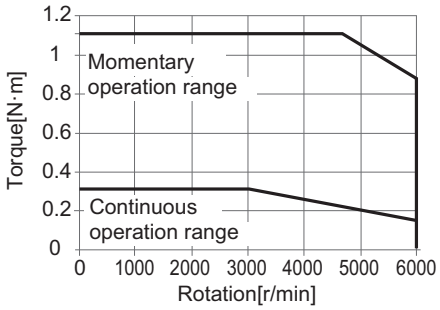

• R88M-1M20030T

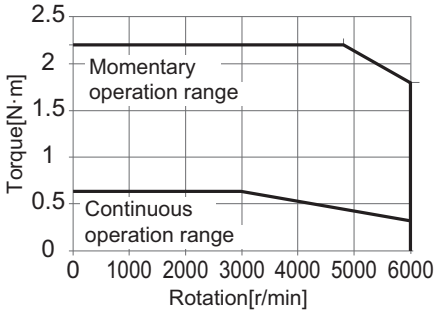

• R88M-1M40030T

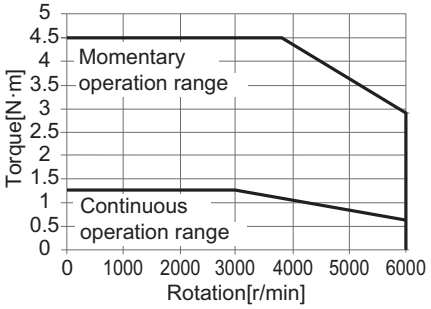

• R88M-1M75030T

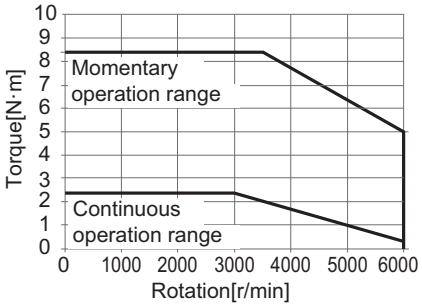

• R88M-1L1K030T

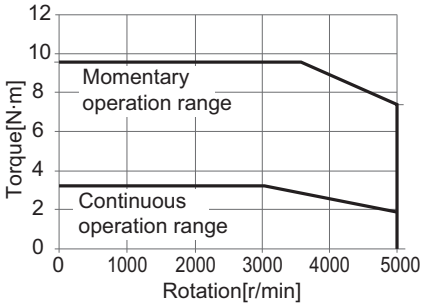

• R88M-1L1K530T

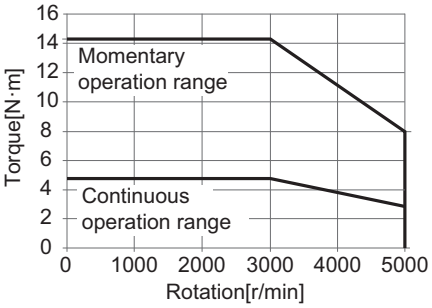

• R88M-1L2K030T

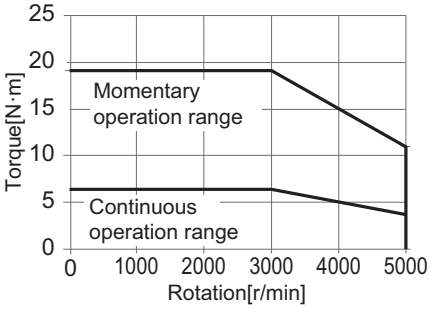

• R88M-1L3K030T

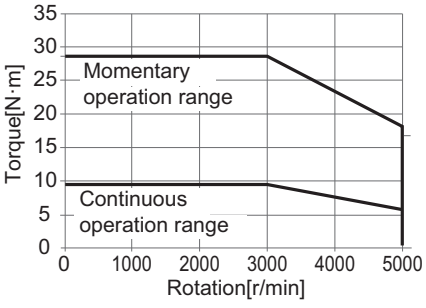

• R88M-1L4K030T

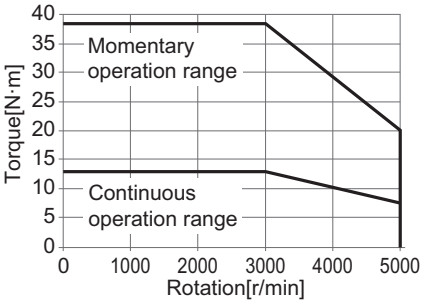

• R88M-1L5K030T

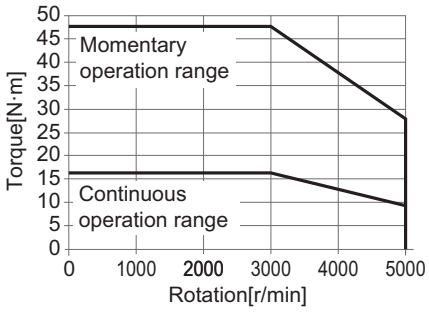

Note: The continuous operation range is the range in which continuous operation is possible at an ambient temperature of 40°C when the Servomotor is horizontally installed on a specified radiator plate.
Continuous operation at the maximum speed is also possible. However, doing so will reduce the output torque.

Torque-Rotation Speed Characteristics for 3,000-r/min Servomotors (400 VAC)

The following graphs show the characteristics with a 3-m standard cable and a 3-phase 400 VAC input.

• R88M-1L75030C

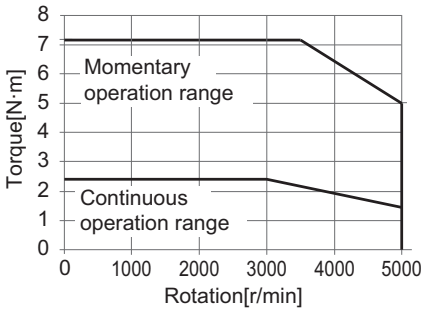

• R88M-1L1K030C

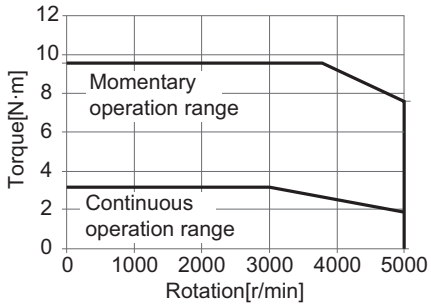

• R88M-1L1K530C

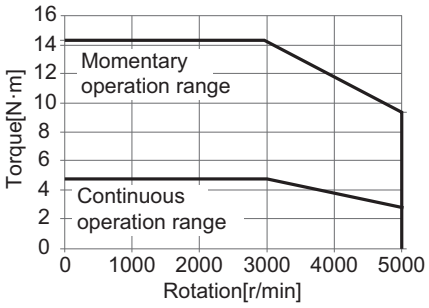

• R88M-1L2K030C

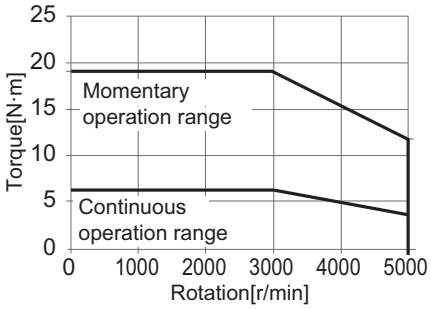

• R88M-1L3K030C

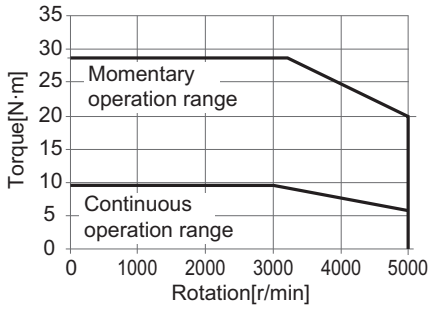

• R88M-1L4K030C

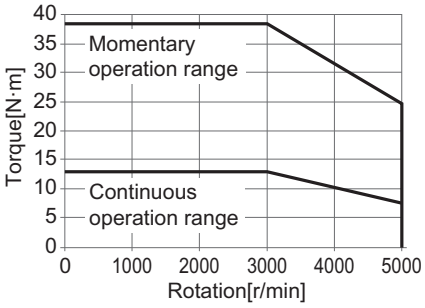

• R88M-1L5K030C

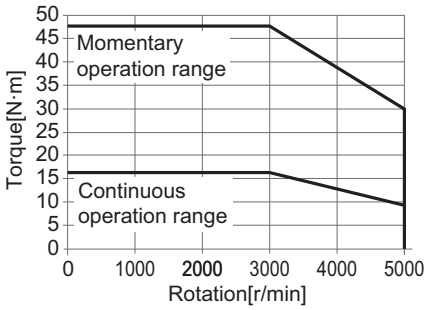

Note: The continuous operation range is the range in which continuous operation is possible at an ambient temperature of 40°C when the Servomotor is horizontally installed on a specified radiator plate.
Continuous operation at the maximum speed is also possible. However, doing so will reduce the output torque.

2,000-r/min Servomotors

Item		Model (R88M-) / Unit	200 VAC			
			1M1K020T	1M1K520T	1M2K020T	1M3K020T
Rated output *1 *2		W	1,000	1,500	2,000	3,000
Rated torque *1 *2		N·m	4.77	7.16	9.55	14.3
Rated rotation speed *1 *2		r/min	2,000			
Maximum rotation speed		r/min	3,000			
Momentary maximum torque *1		N·m	14.3	21.5	28.7	43.0
Rated current *1 *2		A (rms)	5.2	8.6	11.3	15.7
Momentary maximum current *1		A (rms)	16.9	28.4	40.6	54.7
Rotor inertia	Without brake	× 10^{-4} kg·m^2	6.0042	9.0042	12.2042	15.3122
	With brake	× 10^{-4} kg·m^2	6.5042	9.5042	12.7042	17.4122
Applicable load inertia		× 10^{-4} kg·m^2	59.0	79.9	100	142
Torque constant *1		N·m/ A (rms)	0.93	0.83	0.85	0.93
Power rate *1 *3		kW/s	38	57	75	134
Mechanical time constant *3		ms	0.94	0.78	0.81	0.80
Electrical time constant		ms	13	15	14	19
Allowable radial load *4		N	490			784
Allowable thrust load *4		N	196			343
Weight	Without brake	kg	6.6	8.5	10	12
	With brake	kg	8.6	10.5	12	15
Radiator plate dimensions (material)		mm	400 × 400 × t20 (aluminum)	470 × 470 × t20 (aluminum)		
Brake specifications *5	Excitation voltage *6	V	24 VDC±10%			
	Current consumption (at 20°C)	A	0.51	0.51	0.66	0.60
	Static friction torque	N·m	9.0 min.	9.0 min.	12 min.	16 min.
	Attraction time	ms	100 max.	100 max.	100 max.	150 max.
	Release time *7	ms	30 max.	30 max.	30 max.	50 max.
	Backlash	°	0.6 max.	0.6 max.	0.6 max.	0.6 max.
	Allowable braking work	J	1,000	1,000	1,000	350
	Allowable total work	J	3,000,000	3,000,000	3,000,000	1,000,000
	Allowable angular acceleration	rad/s^2	10,000 max.			
	Brake lifetime (acceleration/ deceleration)	---	10 million times min.			
	Insulation class	---	Class F			

Item		Model (R88M-) / Unit	400 VAC		
			1M40020C	1M60020C	1M1K020C
Rated output *1 *2		W	400	600	1,000
Rated torque *1 *2		N·m	1.91	2.86	4.77
Rated rotation speed *1 *2		r/min	2,000		
Maximum rotation speed		r/min	3,000		
Momentary maximum torque *1		N·m	5.73	8.59	14.3
Rated current *1 *2		A (rms)	1.1	1.6	2.9
Momentary maximum current *1		A (rms)	3.9	5.5	9.4
Rotor inertia	Without brake	× 10^{-4} kg·m^2	2.5042	3.9042	6.0042
	With brake	× 10^{-4} kg·m^2	2.8472	4.2472	6.5042
Applicable load inertia		× 10^{-4} kg·m^2	19.0	23.5	59.0
Torque constant *1		N·m/ A (rms)	1.75	1.84	1.69
Power rate *1 *3		kW/s	14.6	21.0	38
Mechanical time constant *3		ms	1.57	1.21	0.94
Electrical time constant		ms	6.8	7.8	13
Allowable radial load *4		N	490		
Allowable thrust load *4		N	196		
Weight	Without brake	kg	3.9	4.7	6.6
	With brake	kg	4.8	5.8	8.6
Radiator plate dimensions (material)		mm	305 × 305 × t12 (aluminum)		400 × 400 × t20 (aluminum)
Brake specifications *5	Excitation voltage *6	V	24 VDC±10%		
	Current consumption (at 20°C)	A	0.30	0.30	0.51
	Static friction torque	N·m	3.92 min.	3.92 min.	9.0 min.
	Attraction time	ms	40 max.	40 max.	100 max.
	Release time *7	ms	25 max.	25 max.	30 max.
	Backlash	°	1.0 max.	1.0 max.	0.6 max.
	Allowable braking work	J	330	330	1,000
	Allowable total work	J	330,000	330,000	3,000,000
	Allowable angular acceleration	rad/s^2	10,000 max.		
	Brake lifetime (acceleration/ deceleration)	---	10 million times min.		
	Insulation class	---	Class F		

Item		Model (R88M-) / Unit	400 VAC		
			1M1K520C	1M2K020C	1M3K020C
Rated output *1 *2		**W**	1,500	2,000	3,000
Rated torque *1 *2		**N·m**	7.16	9.55	14.3
Rated rotation speed *1 *2		**r/min**	2,000		
Maximum rotation speed		**r/min**	3,000		
Momentary maximum torque *1		**N·m**	21.5	28.7	43.0
Rated current *1 *2		**A (rms)**	4.1	5.7	8.6
Momentary maximum current *1		**A (rms)**	13.5	19.8	28.3
Rotor inertia	**Without brake**	**× 10^{-4} kg·m^2**	9.0042	12.2042	15.3122
	With brake	**× 10^{-4} kg·m^2**	9.5042	12.7042	17.4122
Applicable load inertia		**× 10^{-4} kg·m^2**	79.9	100	142
Torque constant *1		**N·m/ A (rms)**	1.75	1.75	1.74
Power rate *1 *3		**kW/s**	57	75	134
Mechanical time constant *3		**ms**	0.85	0.80	0.76
Electrical time constant		**ms**	13	14	20
Allowable radial load *4		**N**	490		784
Allowable thrust load *4		**N**	196		343
Weight	**Without brake**	**kg**	8.5	10	12
	With brake	**kg**	10.5	12	15
Radiator plate dimensions (material)		**mm**	470 × 470 × t20 (aluminum)		
Brake specifications *5	**Excitation voltage** *6	**V**	24 VDC±10%		
	Current consumption (at 20°C)	**A**	0.51	0.66	0.60
	Static friction torque	**N·m**	9.0 min.	12 min.	16 min.
	Attraction time	**ms**	100 max.	100 max.	150 max.
	Release time *7	**ms**	30 max.	30 max.	50 max.
	Backlash	**°**	0.6 max.	0.6 max.	0.6 max.
	Allowable braking work	**J**	1,000	1,000	350
	Allowable total work	**J**	3,000,000	3,000,000	1,000,000
	Allowable angular acceleration	**rad/s^2**	10,000 max.		
	Brake lifetime (acceleration/ deceleration)	**---**	10 million times min.		
	Insulation class	**---**	Class F		

*1. This is a typical value for when the Servomotor is used at a normal temperature (20°C, 65%) in combination with a Servo Drive.
*2. The rated values are the values with which continuous operation is possible at an ambient temperature of 40°C when the Servomotor is horizontally installed on a specified radiator plate.
*3. This value is for models without options.
*4. The allowable radial and thrust loads are the values determined for a limit of 20,000 hours at normal operating temperatures. The allowable radial loads are applied as shown in the following diagram.

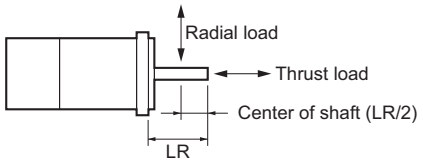

*5. When the brake is released for a vertical axis, refer to the *AC Servomotors/Servo Drives 1S-series with Built-in EtherCAT® Communications User's Manual* (Cat.No.I586) to set an appropriate value for Brake Interlock Output (4610 hex).
*6. This is a non-excitation brake. It is released when excitation voltage is applied.
*7. This value is a reference value.

Torque-Rotation Speed Characteristics for 2,000-r/min Servomotors (200 VAC)

The following graphs show the characteristics with a 3-m standard cable and a 3-phase 200-VAC or single-phase 220-VAC input.

• R88M-1M1K020T

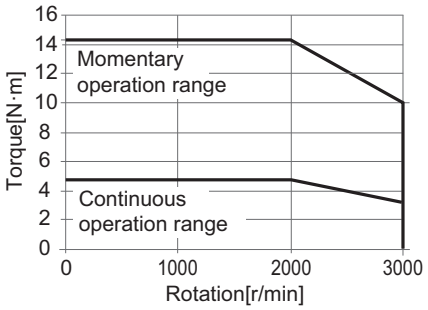

• R88M-1M1K520T

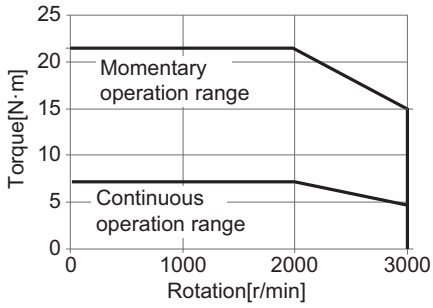

• R88M-1M2K020T

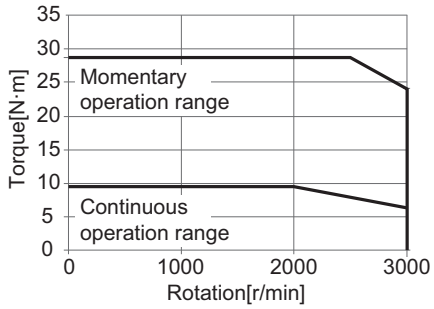

• R88M-1M3K020T

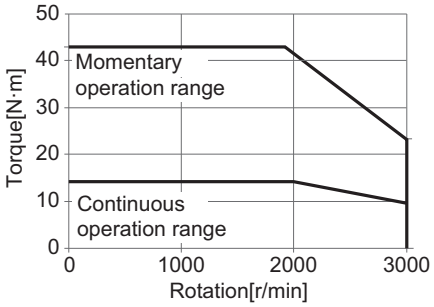

Note: The continuous operation range is the range in which continuous operation is possible at an ambient temperature of 40°C when the Servomotor is horizontally installed on a specified radiator plate.
Continuous operation at the maximum speed is also possible. However, doing so will reduce the output torque.

Torque-Rotation Speed Characteristics for 2,000-r/min Servomotors (400 VAC)

The following graphs show the characteristics with a 3-m standard cable and a 400 VAC input.

• R88M-1M40020C

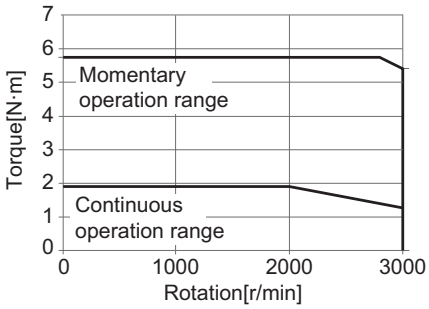

• R88M-1M60020C

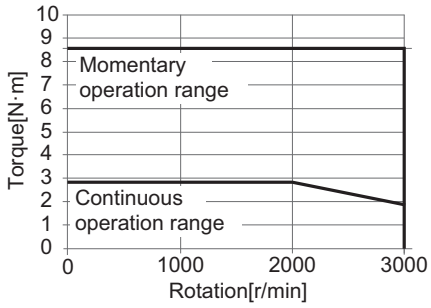

• R88M-1M1K020C

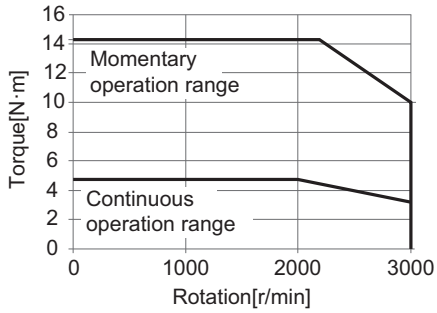

• R88M-1M1K520C

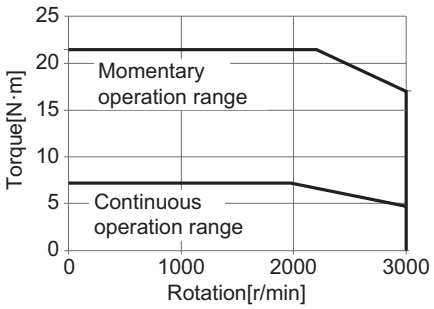

• R88M-1M2K020C

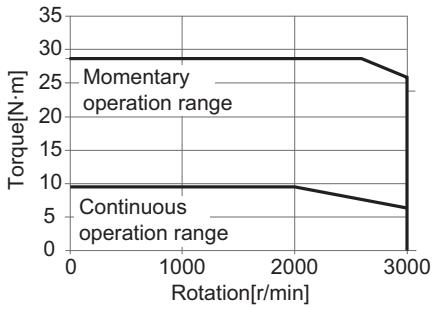

• R88M-1M3K020C

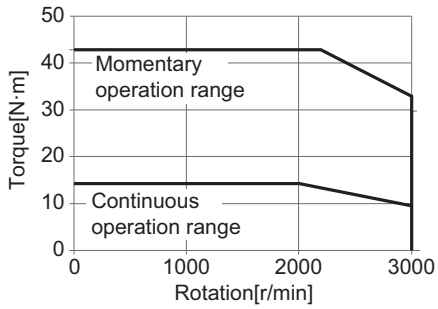

Note: The continuous operation range is the range in which continuous operation is possible at an ambient temperature of 40°C when the Servomotor is horizontally installed on a specified radiator plate.
Continuous operation at the maximum speed is also possible. However, doing so will reduce the output torque.

1,500-r/min Servomotors

Item		Model (R88M-) / Unit	200 VAC				
			1M4K015T	1M5K015T	1M7K515T	1M11K015T	1M15K015T
Rated output *1 *2		W	4,000	5,000	7,500	11,000	15,000
Rated torque *1 *2		N·m	25.5	31.8	47.8	70.0	95.5
Rated rotation speed *1 *2		r/min	1,500				
Maximum rotation speed		r/min	3,000			2,000	
Momentary maximum torque *1		N·m	75	95	119	175	224
Rated current *1 *2		A (rms)	25.7	25.8	41.2	57	60.7
Momentary maximum current *1		A (rms)	84.8	84.8	113.0	150.0	150.0
Rotor inertia	Without brake	× 10^{-4} kg·m^2	54.0122	77.0122	113.0122	229.0122	340.0122
	With brake	× 10^{-4} kg·m^2	60.0122	83.0122	118.0122	253.0122	365.0122
Applicable load inertia		× 10^{-4} kg·m^2	687	955	1,070	2,200	3,110
Torque constant *1		N·m/ A (rms)	1.08	1.36	1.29	1.40	1.79
Power rate *1 *3		kW/s	120	131	202	214	268
Mechanical time constant *3		ms	1	1.1	0.75	0.61	0.56
Electrical time constant		ms	19	19	24	32	32
Allowable radial load *4		N	1,200	1,470	1,470	2,500	2,500
Allowable thrust load *4		N	343	490	490	686	686
Weight	Without brake	kg	21	29	39	63	85
	With brake	kg	26	34	45	73	99
Radiator plate dimensions (material)		mm	470 × 470 × t20 (aluminum)	540 × 540 × t20 (aluminum)		670 × 630 × t35 (aluminum)	
Brake specifications *5	Excitation voltage *6	V	24 VDC±10%				
	Current consumption (at 20°C)	A	1.0	1.0	1.4	1.7	0.92
	Static friction torque	N·m	32 min.	42 min.	54.9 min.	90 min.	100 min.
	Attraction time	ms	150 max.	150 max.	300 max.	300 max.	600 max.
	Release time *7	ms	60 max.	60 max.	140 max.	140 max.	215 max.
	Backlash	°	0.8 max.	0.8 max.	0.2 max.	0.2 max.	0.2 max.
	Allowable braking work	J	1,400	1,400	830	1,400	1,400
	Allowable total work	J	4,600,000	4,600,000	2,500,000	4,600,000	6,100,000
	Allowable angular acceleration	rad/s^2	10,000 max.		5,000 max.	3,000 max.	
	Brake lifetime (acceleration/ deceleration)	---	10 million times min.				
	Insulation class	---	Class F				

Item		Model (R88M-) / Unit	400 VAC				
			1M4K015C	1M5K515C	1M7K515C	1M11K015C	1M15K015C
Rated output *1 *2		W	4,000	5,500	7,500	11,000	15,000
Rated torque *1 *2		N·m	25.5	35.0	47.8	70	95.5
Rated rotation speed *1 *2		r/min	1,500				
Maximum rotation speed		r/min	3,000			2,000	
Momentary maximum torque *1		N·m	75	95	119	175	224
Rated current *1 *2		A (rms)	12.8	14.0	22.0	31.4	33.3
Momentary maximum current *1		A (rms)	42.4	42.4	56.5	80.7	81.2
Rotor inertia	Without brake	× 10^{-4} kg·m^2	54.0122	77.0122	113.0122	229.0122	340.0122
	With brake	× 10^{-4} kg·m^2	60.0122	83.0122	118.0122	253.0122	365.0122
Applicable load inertia		× 10^{-4} kg·m^2	687	955	1070	2200	3110
Torque constant *1		N·m/ A (rms)	2.07	2.68	2.49	2.6	3.27
Power rate *1 *3		kW/s	120	159	202	214	268
Mechanical time constant *3		ms	1.2	1	0.78	0.63	0.62
Electrical time constant		ms	18	19	23	29	29
Allowable radial load *4		N	1,200	1,470	1470	2,500	2,500
Allowable thrust load *4		N	343	490	490	686	686
Weight	Without brake	kg	21	29	39	63	85
	With brake	kg	26	34	45	73	99
Radiator plate dimensions (material)		mm	470 × 470 × t20	540 x 540x t20 (aluminum)		670 × 630 × t35 (aluminum)	
Brake specifications *5	Excitation voltage *6	V	24 VDC ± 10%				
	Current consumption (at 20°C)	A	1.0	1.0	1.4	1.7	0.92
	Static friction torque	N·m	32 min.	42 min.	54.9 min.	90 min.	100 min.
	Attraction time	ms	150 max.	150 max.	300 max.	300 max.	600 max.
	Release time *7	ms	60 max.	60 max.	140 max.	140 max.	215 max.
	Backlash	°	0.8 max.	0.8 max.	0.2 max.	0.2 max.	0.2 max.
	Allowable braking work	J	1,400	1,400	830	1,400	1,400
	Allowable total work	J	4,600,000	4,600,000	2,500,000	4,600,000	6,100,000
	Allowable angular acceleration	rad/s^2	10,000 max.		5,000 max.	3,000 max.	
	Brake lifetime (acceleration/ deceleration)	---	10 million times min.				
	Insulation class	---	Class F				

*1. This is a typical value for when the Servomotor is used at a normal temperature (20°C, 65%) in combination with a Servo Drive.
*2. The rated values are the values with which continuous operation is possible at an ambient temperature of 40°C when the Servomotor is horizontally installed on a specified radiator plate.
*3. This value is for models without options.
*4. The allowable radial and thrust loads are the values determined for a limit of 20,000 hours at normal operating temperatures. The allowable radial loads are applied as shown in the following diagram.

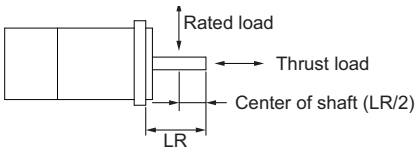

*5. When the brake is released for a vertical axis, refer to the *AC Servomotors/Servo Drives 1S-series with Built-in EtherCAT® Communications User's Manual* (Cat.No.I586) to set an appropriate value for Brake Interlock Output (4610 hex).
*6. This is a non-excitation brake. It is released when excitation voltage is applied.
*7. This value is a reference value.

Torque-Rotation Speed Characteristics for 1,500-r/min Servomotors (200 VAC)

The following graphs show the characteristics with a 3-m standard cable and a 3-phase 200-VAC input.

• R88M-1M4K015T

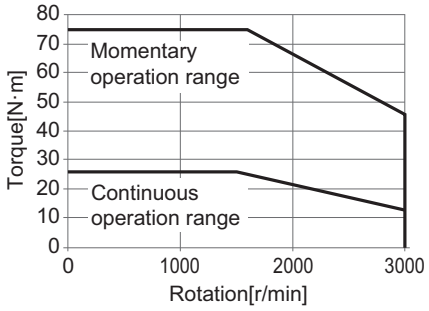

• R88M-1M5K515T

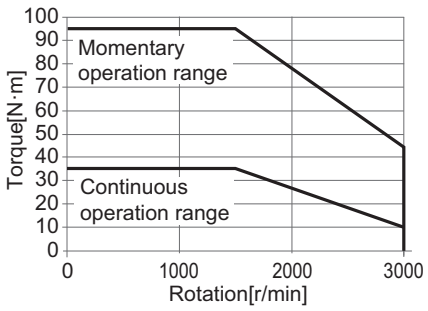

• R88M-1M7K515T

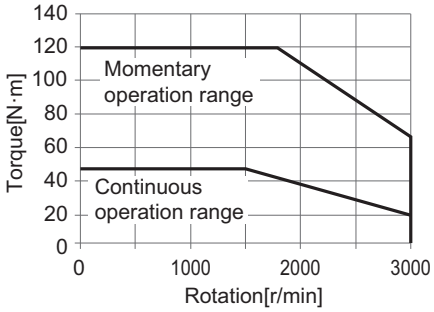

• R88M-1M11K015T

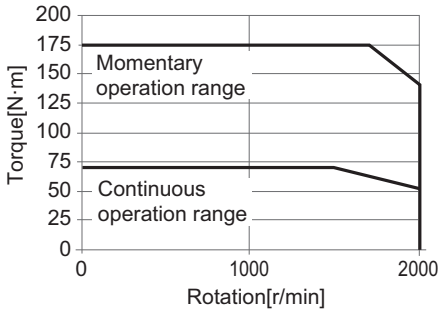

• R88M-1M15K015T

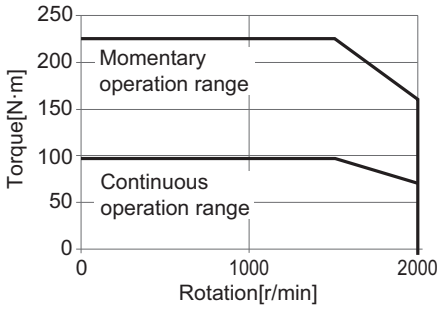

Note: The continuous operation range is the range in which continuous operation is possible at an ambient temperature of 40°C when the Servomotor is horizontally installed on a specified radiator plate.
Continuous operation at the maximum speed is also possible. However, doing so will reduce the output torque.

Torque-Rotation Speed Characteristics for 1,500-r/min Servomotors (400 VAC)

The following graphs show the characteristics with a 3-m standard cable and a 400 VAC input.

• R88M-1M4K015C

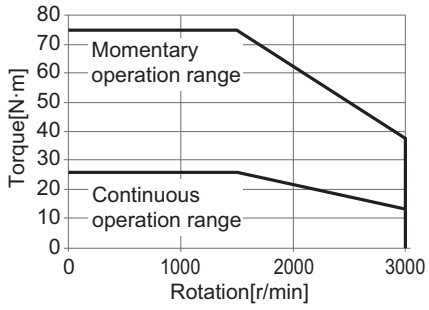

• R88M-1M5K515C

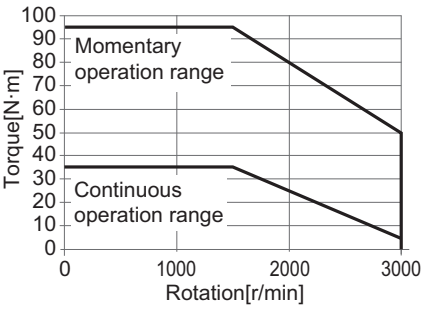

• R88M-1M7K515C

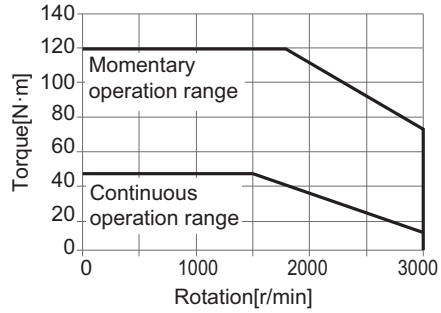

• R88M-1M11K015C

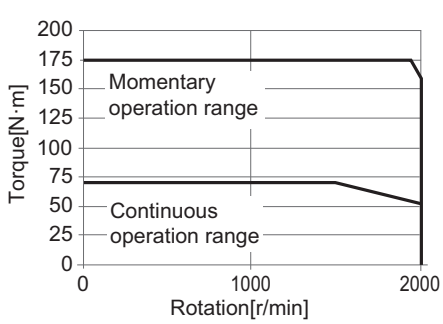

• R88M-1M15K015C

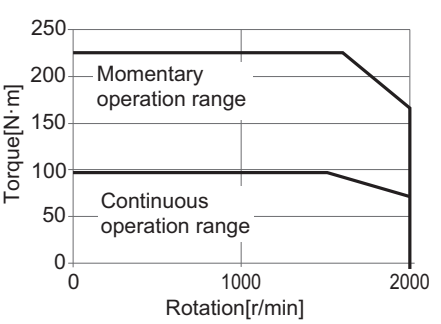

Note: The continuous operation range is the range in which continuous operation is possible at an ambient temperature of 40°C when the Servomotor is horizontally installed on a specified radiator plate.
Continuous operation at the maximum speed is also possible. However, doing so will reduce the output torque.

1,000-r/min Servomotors

Item		Model (R88M-)	200 VAC		
		Unit	1M90010T	1M2K010T	1M3K010T
Rated output *1 *2		W	900	2,000	3,000
Rated torque *1 *2		N·m	8.59	19.1	28.7
Rated rotation speed *1 *2		r/min	1,000		
Maximum rotation speed		r/min	2,000		
Momentary maximum torque *1		N·m	19.3	47.7	71.7
Rated current *1 *2		A (rms)	6.7	14.4	21.2
Momentary maximum current *1		A (rms)	16.9	40.6	54.7
Rotor inertia	Without brake	× 10^{-4} kg·m^2	9.0042	40.0122	68.0122
	With brake	× 10^{-4} kg·m^2	9.5042	45.1122	73.1122
Applicable load inertia		× 10^{-4} kg·m^2	79.9	314	492
Torque constant *1		N·m/ A (rms)	1.28	1.45	1.51
Power rate *1 *3		kW/s	82	91	121
Mechanical time constant *3		ms	0.77	1.0	0.83
Electrical time constant		ms	15	18	22
Allowable radial load *4		N	686	1,176	1,470
Allowable thrust load *4		N	196	490	
Weight	Without brake	kg	8.5	18	28
	With brake	kg	10.5	22	33
Radiator plate dimensions (material)		mm	470 × 470 × t20 (aluminum)		540 × 540 × t20 (aluminum)
Brake specifications *5	Excitation voltage *6	V	24 VDC±10%		
	Current consumption (at 20°C)	A	0.51	1.2	1.0
	Static friction torque	N·m	9.0 min.	22 min.	42 min.
	Attraction time	ms	100 max.	120 max.	150 max.
	Release time *7	ms	30 max.	50 max.	60 max.
	Backlash	°	0.6 max.	0.8 max.	0.8 max.
	Allowable braking work	J	1,000	1,400	1,400
	Allowable total work	J	3,000,000	4,600,000	4,600,000
	Allowable angular acceleration	rad/s^2	10,000 max.		
	Brake lifetime (acceleration/ deceleration)	---	10 million times min.		
	Insulation class	---	Class F		

Item		Model (R88M-) Unit	400 VAC 1M90010C	1M2K010C	1M3K010C
Rated output *1 *2		**W**	900	2,000	3,000
Rated torque *1 *2		**N·m**	8.59	19.1	28.7
Rated rotation speed *1 *2		**r/min**	1,000		
Maximum rotation speed		**r/min**	2,000		
Momentary maximum torque *1		**N·m**	19.3	47.7	71.7
Rated current *1 *2		**A (rms)**	3.6	7.1	10.6
Momentary maximum current *1		**A (rms)**	9.0	19.5	27.7
Rotor inertia	**Without brake**	**× 10^{-4} kg·m^2**	9.0042	40.0122	68.0122
	With brake	**× 10^{-4} kg·m^2**	9.5042	45.1122	73.1122
Applicable load inertia		**× 10^{-4} kg·m^2**	79.9	314	492
Torque constant *1		**N·m/ A (rms)**	2.41	3.00	2.97
Power rate *1 *3		**kW/s**	82	91	121
Mechanical time constant *3		**ms**	0.88	1.2	0.92
Electrical time constant		**ms**	13	16	19
Allowable radial load *4		**N**	686	1,176	1,470
Allowable thrust load *4		**N**	196	490	
Weight	**Without brake**	**kg**	8.5	18	28
	With brake	**kg**	10.5	22	33
Radiator plate dimensions (material)		**mm**	470 × 470 × t20 (aluminum)		540 × 540 × t20 (aluminum)
Brake specifications *5	**Excitation voltage** *6	**V**	24 VDC±10%		
	Current consumption (at 20°C)	**A**	0.51	1.2	1.0
	Static friction torque	**N·m**	9.0 min.	22 min.	42 min.
	Attraction time	**ms**	100 max.	120 max.	150 max.
	Release time *7	**ms**	30 max.	50 max.	60 max.
	Backlash	**°**	0.6 max.	0.8 max.	0.8 max.
	Allowable braking work	**J**	1,000	1,400	1,400
	Allowable total work	**J**	3,000,000	4,600,000	4,600,000
	Allowable angular acceleration	**rad/s^2**	10,000 max.		
	Brake lifetime (acceleration/ deceleration)	**---**	10 million times min.		
	Insulation class	**---**	Class F		

*1. This is a typical value for when the Servomotor is used at a normal temperature (20°C, 65%) in combination with a Servo Drive.
*2. The rated values are the values with which continuous operation is possible at an ambient temperature of 40°C when the Servomotor is horizontally installed on a specified radiator plate.
*3. This value is for models without options.
*4. The allowable radial and thrust loads are the values determined for a limit of 20,000 hours at normal operating temperatures. The allowable radial loads are applied as shown in the following diagram.

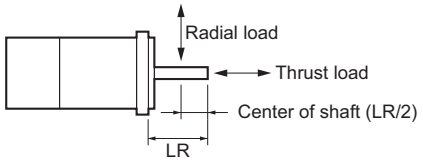

*5. When the brake is released for a vertical axis, refer to the *AC Servomotors/Servo Drives 1S-series with Built-in EtherCAT® Communications User's Manual* (Cat.No.I586) to set an appropriate value for Brake Interlock Output (4610 hex).
*6. This is a non-excitation brake. It is released when excitation voltage is applied.
*7. This value is a reference value.

Torque-Rotation Speed Characteristics for 1,000-r/min Servomotors (200 V/400 VAC)

The following graphs show the characteristics with a 3-m standard cable and a single-phase 220-VAC or 3-phase 400-VAC input.

• R88M-1M90010T

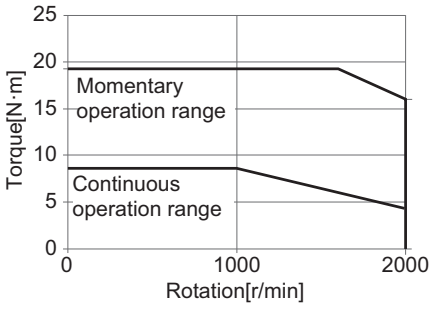

• R88M-1M2K010T

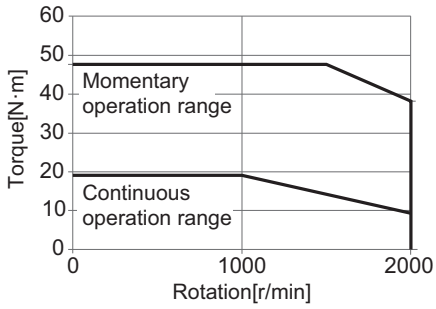

• R88M-1M3K010T

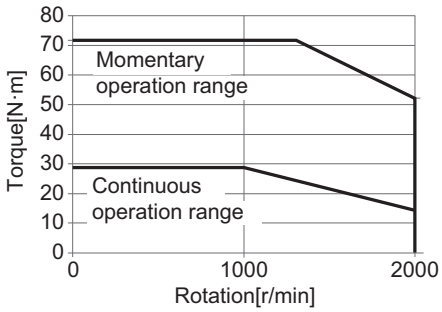

• R88M-1M90010C

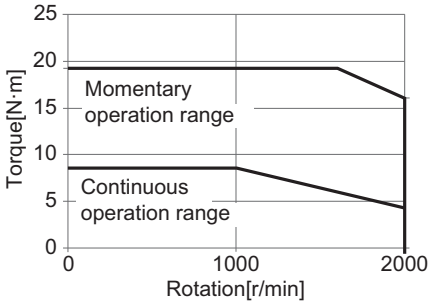

• R88M-1M2K010C

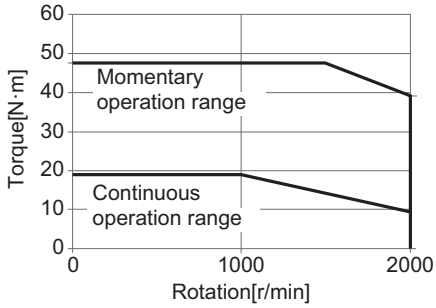

• R88M-1M3K010C

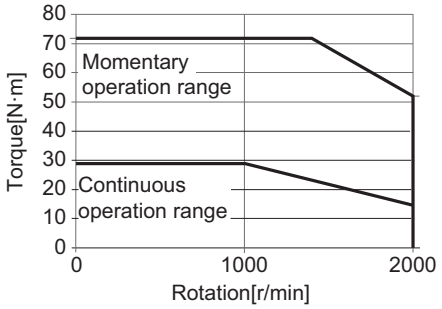

Note: The continuous operation range is the range in which continuous operation is possible at an ambient temperature of 40°C when the Servomotor is horizontally installed on a specified radiator plate.
Continuous operation at the maximum speed is also possible. However, doing so will reduce the output torque.

Part Names

Servomotor Part Names

Flange Size of 80 × 80 or less

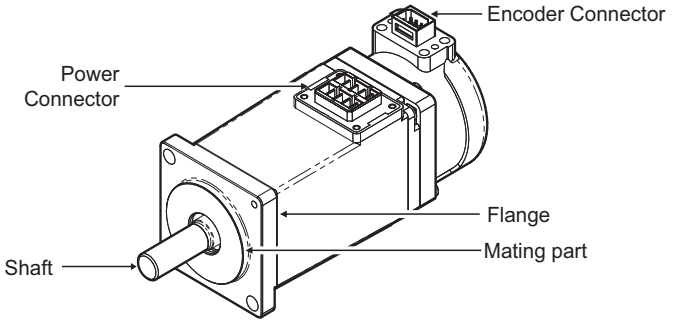

100 VAC 100 W Servomotors (without Brake)

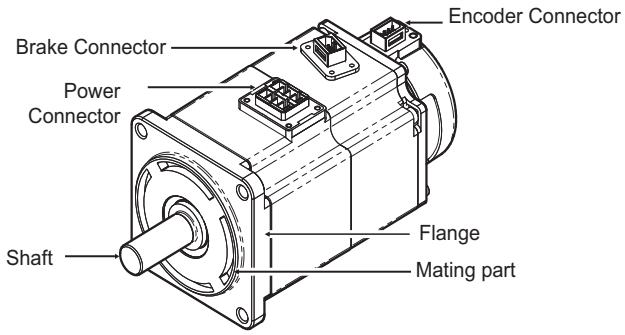

200 VAC 200 W Servomotors (with Brake)

Flange Size of 100 × 100 or more

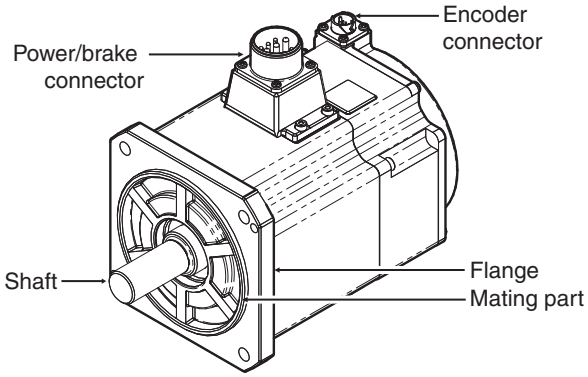

200 VAC 1.5 kW Servomotors (with Brake)

Flange Size of 130 × 130 or more (4 kW or more)

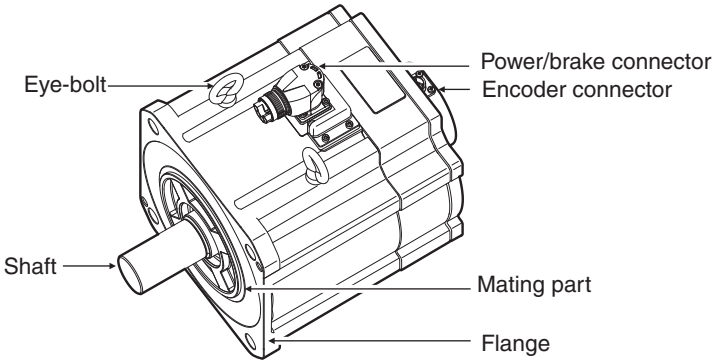

200VAC 4kW Servomotors (with Brake)

Servomotor Functions

Shaft

The load is mounted on this shaft.
The direction which is in parallel with the shaft is called the thrust direction, and the direction which is perpendicular to the shaft is called the radial direction.

Flange

Used for mounting the Servomotor on the equipment.
Fit the mating part into the equipment and use the mounting holes to screw the Servomotor.

Power Connector

Used for supplying power to the phase U, V, and W of the Servomotor.
For Servomotors with a brake and flange size of 100 × 100 or more, the pins for power and brake are set on the same connector.
In the case of a Servomotor with its flange size □130 or more, the cable outlet direction can be selected. The change of the cable outlet direction shall be up to five times.

Encoder Connector

Used for supplying power to the encoder of the Servomotor and communicating with the Servo Drive.
When a Servomotor at 3000 r/min 4 kW or more and a Servomotor at 1500 r/min are selected, use encoder cables with metal shell type (for applicable Servomotor type B at 4 kw or more).

Brake Connector

Used for supplying power to the brake coil of the Servomotor.
This part is attached only to the Servomotors with a brake and flange size of 80 × 80 or less.

Eye-bolt

Used for lifting and moving the motor by putting a wire rope, for example, through the shaft.

External Dimensions

(Unit: mm)

3,000-r/min Servomotors (100 V and 200 V)

50 W (without Brake)

R88M-1M05030S(-O/-S2/-OS2)
R88M-1M05030T(-O/-S2/-OS2)

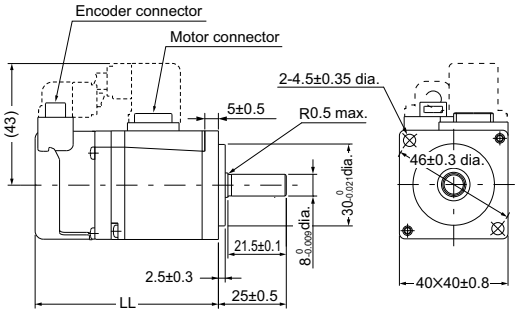

Shaft-end with key and tap

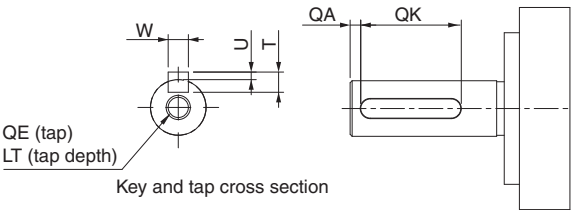

Model	Dimensions [mm]
	LL
R88M-1M05030S(-S2) R88M-1M05030T(-S2)	67.5±1
R88M-1M05030S-O(S2) R88M-1M05030T-O(S2)	72.5±1

Model	Dimensions [mm]						
	QA	QK	W	T	U	QE	LT
R88M-1M05030S (-S2/-OS2)	2	12	$3^{0}_{-0.025}$	3	$1.2^{0}_{-0.2}$	M3	8
R88M-1M05030T (-S2/-OS2)	2	12	$3^{0}_{-0.025}$	3	$1.2^{0}_{-0.2}$	M3	8

Note: The standard shaft type is a straight shaft. Models with a key and tap are indicated with “S2” at the end of the model number. Models with an oil seal are indicated with “O” at the end of the model number.

50 W (with Brake)

R88M-1M05030S-B(O/S2/OS2)
R88M-1M05030T-B(O/S2/OS2)

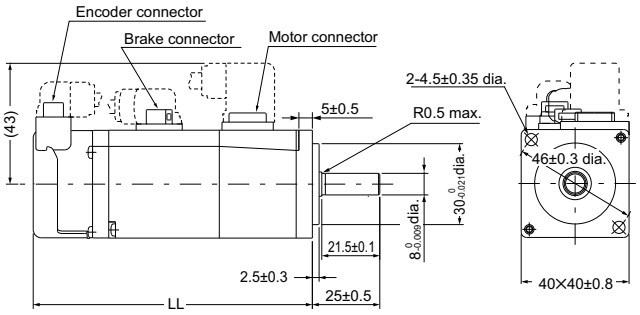

Shaft-end with key and tap

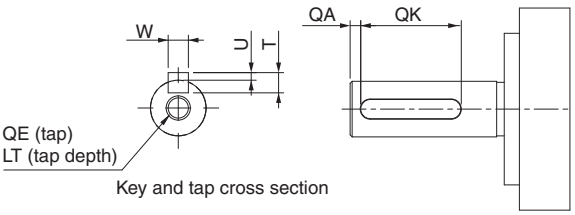

Model	Dimensions [mm]
	LL
R88M-1M05030S-B(S2) R88M-1M05030T-B(S2)	103.5±1
R88M-1M05030S-BO(S2) R88M-1M05030T-BO(S2)	108.5±1

Model	Dimensions [mm]						
	QA	QK	W	T	U	QE	LT
R88M-1M05030S-B (S2/OS2)	2	12	$3^{0}_{-0.025}$	3	$1.2^{0}_{-0.2}$	M3	8
R88M-1M05030T-B (S2/OS2)	2	12	$3^{0}_{-0.025}$	3	$1.2^{0}_{-0.2}$	M3	8

Note: The standard shaft type is a straight shaft. Models with a key and tap are indicated with “S2” at the end of the model number. Models with an oil seal are indicated with “O” at the end of the model number.

100 W (without Brake)

R88M-1M10030S(-O/-S2/-OS2)
R88M-1M10030T(-O/-S2/-OS2)

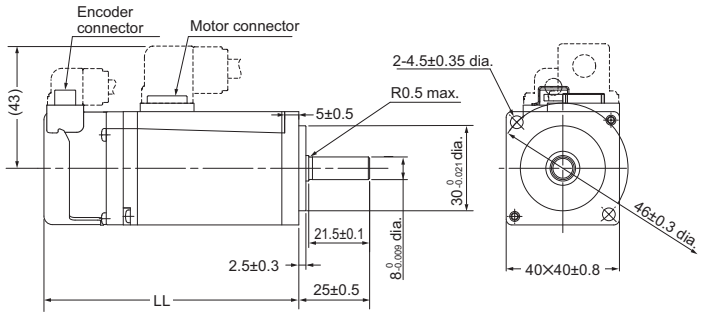

Shaft-end with key and tap

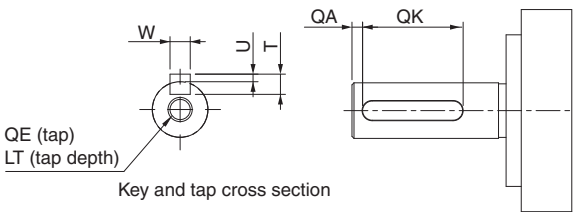

Model	Dimensions [mm]
	LL
R88M-1M10030S(-S2) R88M-1M10030T(-S2)	90±1
R88M-1M10030S-O(S2) R88M-1M10030T-O(S2)	95±1

Model	Dimensions [mm]						
	QA	QK	W	T	U	QE	LT
R88M-1M10030S(-S2/-OS2)	2	12	$3^{0}_{-0.025}$	3	$1.2^{0}_{-0.2}$	M3	8
R88M-1M10030T(-S2/-OS2)	2	12	$3^{0}_{-0.025}$	3	$1.2^{0}_{-0.2}$	M3	8

Note: The standard shaft type is a straight shaft. Models with a key and tap are indicated with “S2” at the end of the model number. Models with an oil seal are indicated with “O” at the end of the model number.

100 W (with Brake)

R88M-1M10030S-B(O/S2/OS2)
R88M-1M10030T-B(O/S2/OS2)

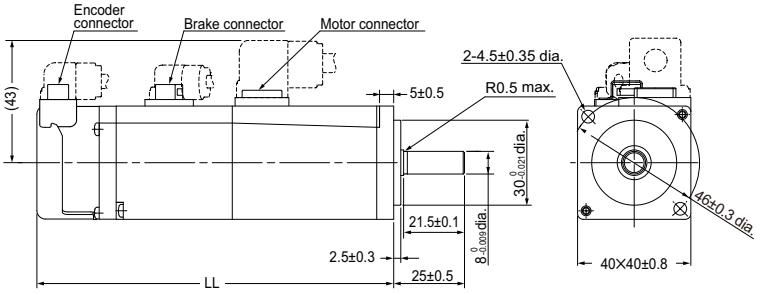

Shaft-end with key and tap

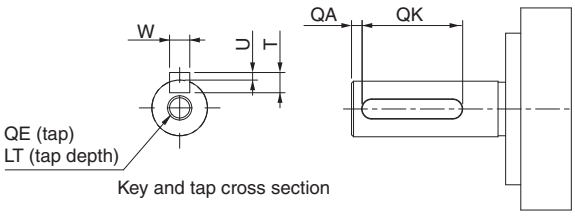

Model	Dimensions [mm]
	LL
R88M-1M10030S-B(S2) R88M-1M10030T-BS2)	126±1
R88M-1M10030S-BO(S2) R88M-1M10030T-BO(S2)	131±1

Model	Dimensions [mm]						
	QA	QK	W	T	U	QE	LT
R88M-1M10030S-B(S2/OS2)	2	12	$3^{0}_{-0.025}$	3	$1.2^{0}_{-0.2}$	M3	8
R88M-1M10030T-B(S2/OS2)	2	12	$3^{0}_{-0.025}$	3	$1.2^{0}_{-0.2}$	M3	8

Note: The standard shaft type is a straight shaft. Models with a key and tap are indicated with “S2” at the end of the model number. Models with an oil seal are indicated with “O” at the end of the model number.

200 W/400 W (without Brake)

R88M-1M20030S(-O/-S2/-OS2)/R88M-1M20030T(-O/-S2/-OS2)
R88M-1M40030S(-O/-S2/-OS2)/R88M-1M40030T(-O/-S2/-OS2)

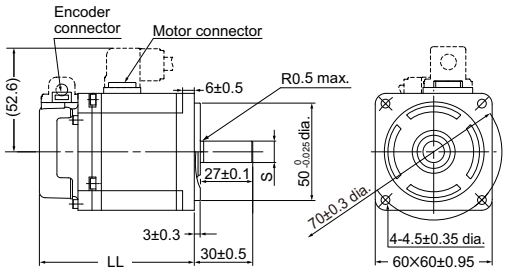

Shaft-end with key and tap

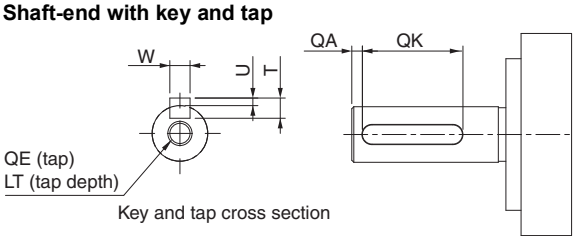

Model	Dimensions [mm]	
	S	LL
R88M-1M20030S(-S2) R88M-1M20030T(-S2)	$11^{0}_{-0.011}$ dia.	79.5±1
R88M-1M40030S(-S2) R88M-1M40030T(-S2)	$14^{0}_{-0.011}$ dia.	105.5±1
R88M-1M20030S-O(S2) R88M-1M20030T-O(S2)	$11^{0}_{-0.011}$ dia.	86.5±1
R88M-1M40030S-O(S2) R88M-1M40030T-O(S2)	$14^{0}_{-0.011}$ dia.	112.5±1

Model	Dimensions [mm]						
	QA	QK	W	T	U	QE	LT
R88M-1M20030S(-S2/-OS2)	2	20	$4^{0}_{-0.03}$	4	$1.5^{0}_{-0.2}$	M4	10
R88M-1M20030T(-S2/-OS2)	2	20	$4^{0}_{-0.03}$	4	$1.5^{0}_{-0.2}$	M4	10
R88M-1M40030S(-S2/-OS2)	2	20	$5^{0}_{-0.03}$	5	$2^{0}_{-0.2}$	M5	12
R88M-1M40030T(-S2/-OS2)	2	20	$5^{0}_{-0.03}$	5	$2^{0}_{-0.2}$	M5	12

Note: The standard shaft type is a straight shaft. Models with a key and tap are indicated with “S2” at the end of the model number. Models with an oil seal are indicated with “O” at the end of the model number.

200 W/400 W (with Brake)

R88M-1M20030S-B(O/S2/OS2)/R88M-1M20030T-B(O/S2/OS2)
R88M-1M40030S-B(O/S2/OS2)/R88M-1M40030T-B(O/S2/OS2)

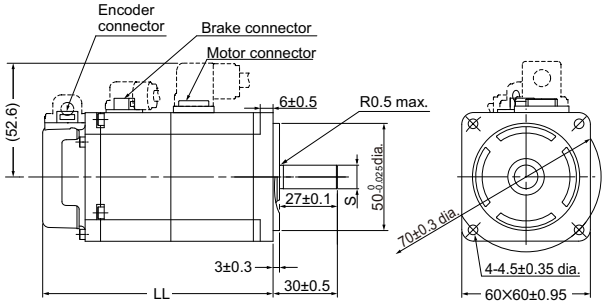

Shaft-end with key and tap

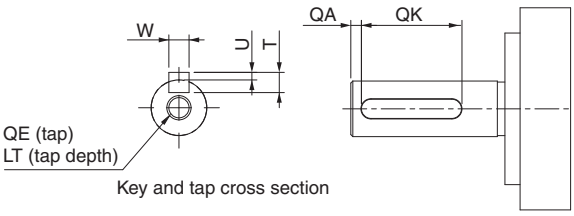

Model	Dimensions [mm]	
	S	LL
R88M-1M20030S-B(S2) R88M-1M20030T-B(S2)	$11^{0}_{-0.011}$ dia.	107.5±1
R88M-1M40030S-B(S2) R88M-1M40030T-B(S2)	$14^{0}_{-0.011}$ dia.	133.5±1
R88M-1M20030S-BO(S2) R88M-1M20030T-BO(S2)	$11^{0}_{-0.011}$ dia.	114.5±1
R88M-1M40030S-BO(S2) R88M-1M40030T-BO(S2)	$14^{0}_{-0.011}$ dia.	140.5±1

Model	Dimensions [mm]						
	QA	QK	W	T	U	QE	LT
R88M-1M20030S-B(S2/OS2)	2	20	$4^{0}_{-0.03}$	4	$1.5^{0}_{-0.2}$	M4	10
R88M-1M20030T-B(S2/OS2)	2	20	$4^{0}_{-0.03}$	4	$1.5^{0}_{-0.2}$	M4	10
R88M-1M40030S-B(S2/OS2)	2	20	$5^{0}_{-0.03}$	5	$2^{0}_{-0.2}$	M5	12
R88M-1M40030T-B(S2/OS2)	2	20	$5^{0}_{-0.03}$	5	$2^{0}_{-0.2}$	M5	12

Note: The standard shaft type is a straight shaft. Models with a key and tap are indicated with “S2” at the end of the model number. Models with an oil seal are indicated with “O” at the end of the model number.

750 W (without Brake)

R88M-1M75030T(-O/-S2/-OS2)

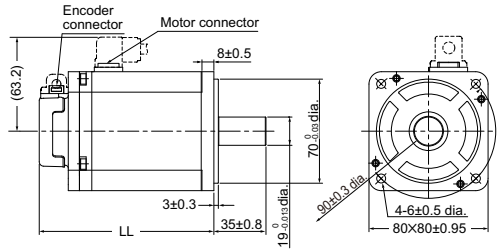

Model	Dimensions [mm]
	LL
R88M-1M75030T(-S2)	117.3±1
R88M-1M75030T-O(S2)	124.3±1

Note: The standard shaft type is a straight shaft. Models with a key and tap are indicated with “S2” at the end of the model number. Models with an oil seal are indicated with “O” at the end of the model number.

Shaft-end with key and tap

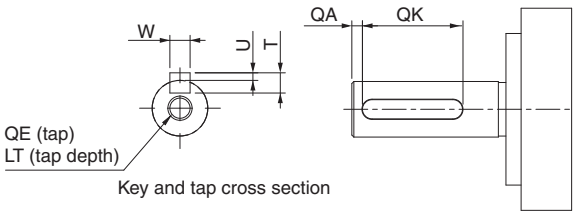

Model	Dimensions [mm]						
	QA	QK	W	T	U	QE	LT
R88M-1M75030T(-S2/-OS2)	3	24	$6^{0}_{-0.03}$	6	$2.5^{0}_{-0.2}$	M5	12

750 W (with Brake)

R88M-1M75030T-B(O/S2/OS2)

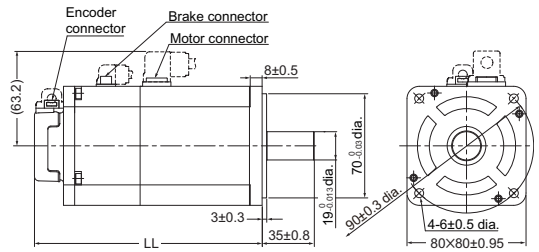

Model	Dimensions [mm]
	LL
R88M-1M75030T-B(S2)	153±1
R88M-1M75030T-BO(S2)	160±1

Note: The standard shaft type is a straight shaft. Models with a key and tap are indicated with “S2” at the end of the model number. Models with an oil seal are indicated with “O” at the end of the model number.

Shaft-end with key and tap

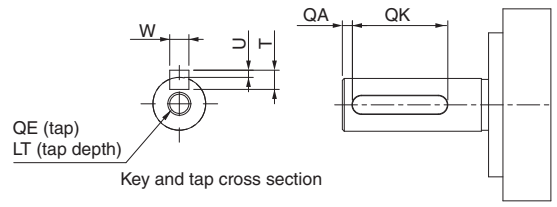

Model	Dimensions [mm]						
	QA	QK	W	T	U	QE	LT
R88M-1M75030T-B(S2/OS2)	3	24	$6^{0}_{-0.03}$	6	$2.5^{0}_{-0.2}$	M5	12

1 kW/1.5 kW/2 kW (without Brake)

R88M-1L1K030T(-O/-S2/-OS2)/R88M-1L1K530T(-O/-S2/-OS2)/ R88M-1L2K030T(-O/-S2/-OS2)

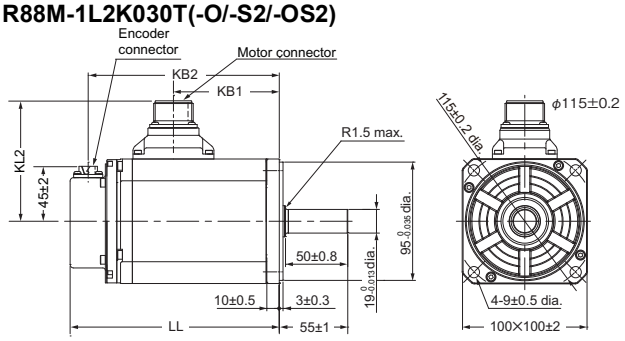

Model	Dimensions [mm]			
	LL	KB1	KB2	KL2
R88M-1L1K030T(-O/-S2/-OS2)	168±2	85±1	153±2	97±2
R88M-1L1K530T(-O/-S2/-OS2)	168±2	85±1	153±2	97±2
R88M-1L2K030T(-O/-S2/-OS2)	179±2	96±1	164±2	102±2

Note: The standard shaft type is a straight shaft. Models with a key and tap are indicated with “S2” at the end of the model number. Models with an oil seal are indicated with “O” at the end of the model number.

Shaft-end with key and tap

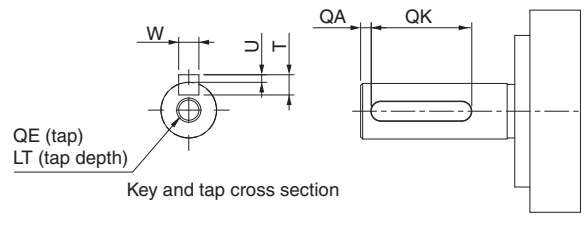

Model	Dimensions [mm]						
	QA	QK	W	T	U	QE	LT
R88M-1L1K030T(-S2/-OS2)	3	42	$6^{0}_{-0.03}$	6	$2.5^{0}_{-0.2}$	M5	12
R88M-1L1K530T(-S2/-OS2)	3	42	$6^{0}_{-0.03}$	6	$2.5^{0}_{-0.2}$	M5	12
R88M-1L2K030T(-S2/OS2)	3	42	$6^{0}_{-0.03}$	6	$2.5^{0}_{-0.2}$	M5	12

1 kW/1.5 kW/2 kW (with Brake)

R88M-1L1K030T-B(O/S2/OS2)/R88M-1L1K530T-B(O/S2/OS2)/ R88M-1L2K030T-B(O/S2/OS2)

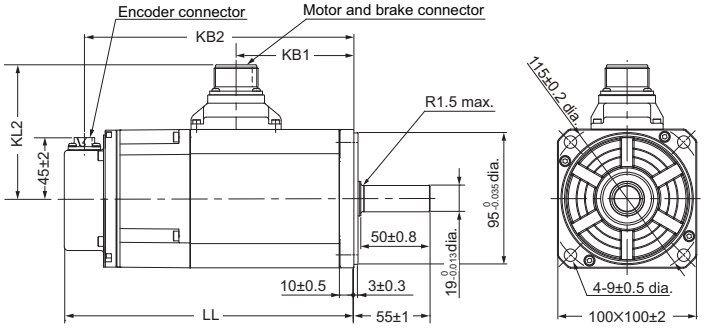

Model	Dimensions [mm]			
	LL	KB1	KB2	KL2
R88M-1L1K030T-B(O/S2/OS2)	209±3	85±1	194±2	97±2
R88M-1L1K530T-B(O/S2/OS2)	209±3	85±1	194±2	97±2
R88M-1L2K030T-B(O/S2/OS)	220±3	96±1	205±2	104±2

Note: The standard shaft type is a straight shaft. Models with a key and tap are indicated with “S2” at the end of the model number. Models with an oil seal are indicated with “O” at the end of the model number.

Shaft-end with key and tap

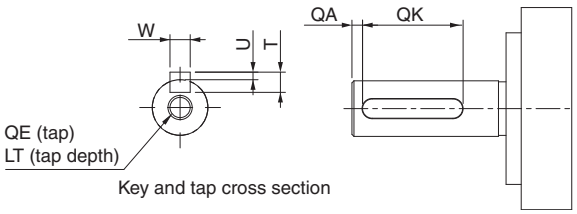

Model	Dimensions [mm]						
	QA	QK	W	T	U	QE	LT
R88M-1L1K030T-B(S2/OS2)	3	42	$6^{0}_{-0.03}$	6	$2.5^{0}_{-0.2}$	M5	12
R88M-1L1K530T-B(S2/OS2)	3	42	$6^{0}_{-0.03}$	6	$2.5^{0}_{-0.2}$	M5	12
R88M-1L2K030T-B(S2/OS2)	3	42	$6^{0}_{-0.03}$	6	$2.5^{0}_{-0.2}$	M5	12

3 kW (without Brake)

R88M-1L3K030T(-O/-S2/-OS2)

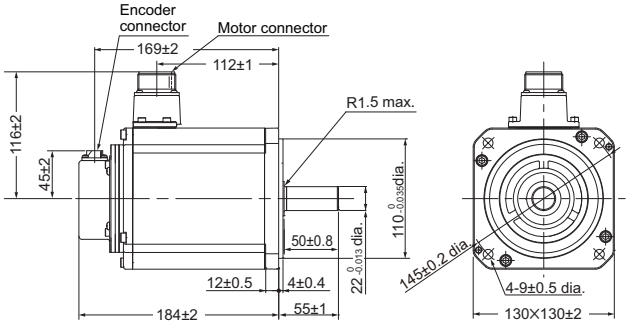

Note: The standard shaft type is a straight shaft. Models with a key and tap are indicated with “S2” at the end of the model number. Models with an oil seal are indicated with “O” at the end of the model number.

Shaft-end with key and tap

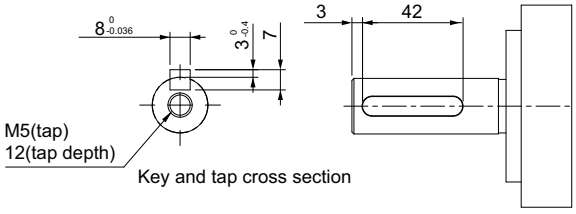

3 kW (with Brake)

R88M-1L3K030T-B(O/S2/OS2)

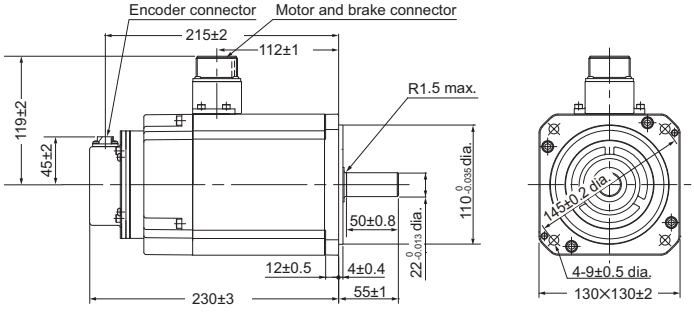

Note: The standard shaft type is a straight shaft. Models with a key and tap are indicated with “S2” at the end of the model number. Models with an oil seal are indicated with “O” at the end of the model number.

Shaft-end with key and tap

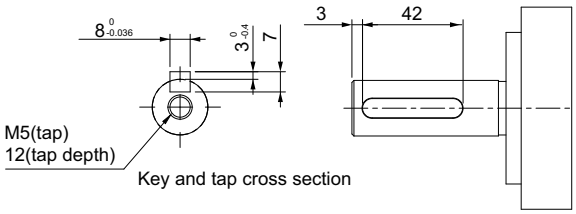

4 kW, 5 kW (without Brake)

R88M-1L4K030T(-O/-S2/-OS2)
R88M-1L5K030T(-O/-S2/-OS2) (Available soon)

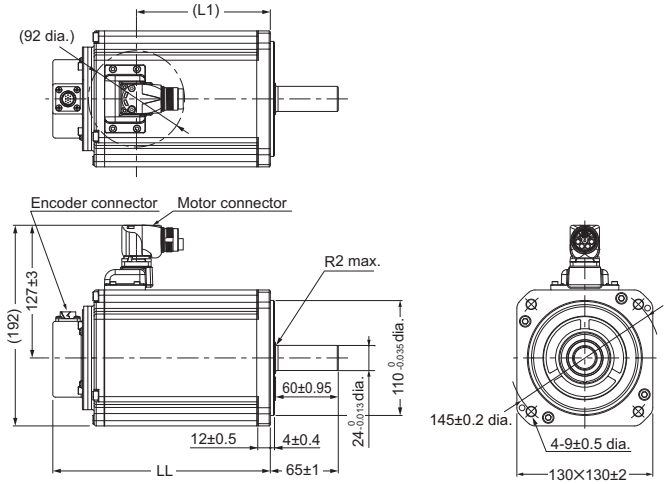

Shaft-end with key and tap

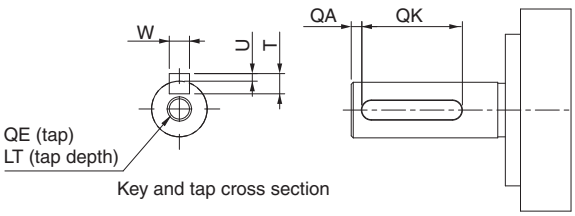

Model	Dimensions [mm]	
	LL	L1
R88M-1L4K030T(-O/-S2/-OS2)	208±3	128
R88M-1L5K030T(-O/-S2/-OS2)	232±3	152

Note: The standard shaft type is a straight shaft. Models with a key and tap are indicated with “S2” at the end of the model number. Models with an oil seal are indicated with “O” at the end of the model number.

Model	Dimensions [mm]						
	QA	QK	W	T	U	QE	LT
R88M-1L4K030T(-S2/-OS2)	3	52	$8^{0}_{-0.036}$	7	$3^{0}_{-0.4}$	M8	20
R88M-1L5K030T(-S2/-OS2)	3	52	$8^{0}_{-0.036}$	7	$3^{0}_{-0.4}$	M8	20

4 kW, 5 kW (with Brake)

R88M-1L4K030T-B(O/S2/OS2)
R88M-1L5K030T-B(O/S2/OS2) (Available soon)

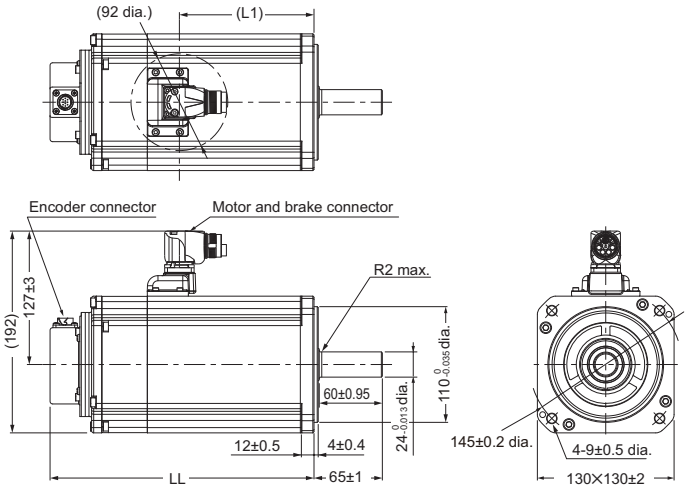

Shaft-end with key and tap

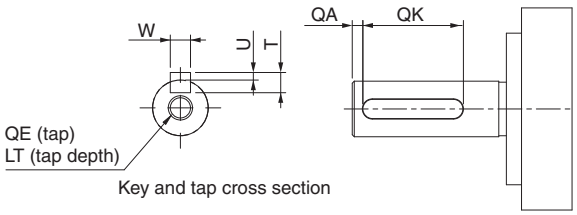

Model	Dimensions [mm]	
	LL	L1
R88M-1L4K030T-B(O/S2/OS2)	251±3	128
R88M-1L5K030T-B(O/S2/OS2)	275±3	152

Model	Dimensions [mm]						
	QA	QK	W	T	U	QE	LT
R88M-1L4K030T-B(S2/OS2)	3	52	$8^{0}_{-0.036}$	7	$3^{0}_{-0.4}$	M8	20
R88M-1L5K030T-B(S2/OS2)	3	52	$8^{0}_{-0.036}$	7	$3^{0}_{-0.4}$	M8	20

Note: The standard shaft type is a straight shaft. Models with a key and tap are indicated with “S2” at the end of the

3,000-r/min Servomotors (400 V)

750 W/1 kW/1.5 kW/2 kW (without Brake)

R88M-1L75030C(-O/-S2/-OS2)/R88M-1L1K030C(-O/-S2/-OS2)
R88M-1L1K530C(-O/-S2/-OS2)/R88M-1L2K030C(-O/-S2/-OS2)

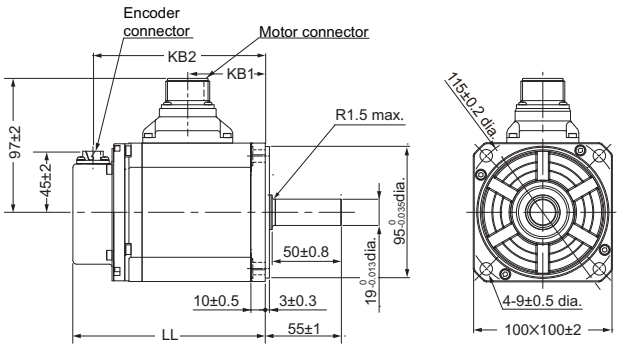

Shaft-end with key and tap

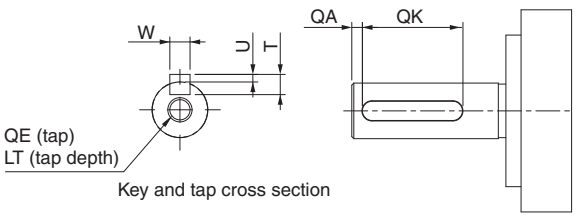

Model	Dimensions [mm]		
	LL	KB1	KB
R88M-1L75030C(-O/-S2/-OS2)	139±2	56±1	124±2
R88M-1L1K030C(-O/-S2/-OS2)	168±2	85±1	153±2
R88M-1L1K530C(-O/-S2/-OS2)	168±2	85±1	153±2
R88M-1L2K030C(-O/-S2/-OS2)	179±2	96±1	164±2

Model	Dimensions [mm]						
	QA	QK	W	T	U	QE	LT
R88M-1L75030C(-S2/-OS2)	3	42	$6^{0}_{-0.03}$	6	$2.5^{0}_{-0.2}$	M5	12
R88M-1L1K030C(-S2/-OS2)	3	42	$6^{0}_{-0.03}$	6	$2.5^{0}_{-0.2}$	M5	12
R88M-1L1K530C(-S2/-OS2)	3	42	$6^{0}_{-0.03}$	6	$2.5^{0}_{-0.2}$	M5	12
R88M-1L2K030C(-S2/-OS2)	3	42	$6^{0}_{-0.03}$	6	$2.5^{0}_{-0.2}$	M5	12

Note: The standard shaft type is a straight shaft. Models with a key and tap are indicated with “S2” at the end of the model number.
Models with an oil seal are indicated with “O” at the end of the model number.

750 W/1 kW/1.5 kW/2 kW (with Brake)

R88M-1L75030C-B(O/S2/OS2)/R88M-1L1K030C-B(O/S2/OS2)
R88M-1L1K530C-B(O/S2/OS2)/R88M-1L2K030C-B(O/S2/OS2)

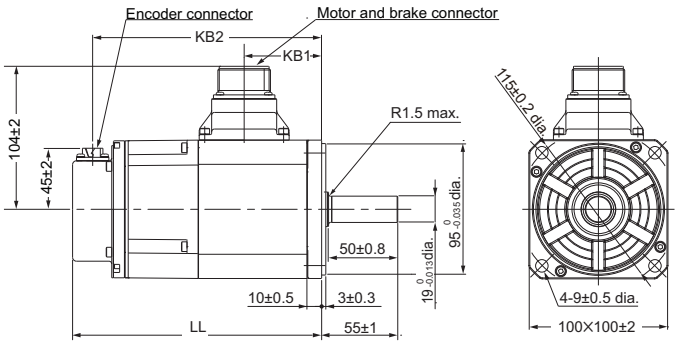

Shaft-end with key and tap

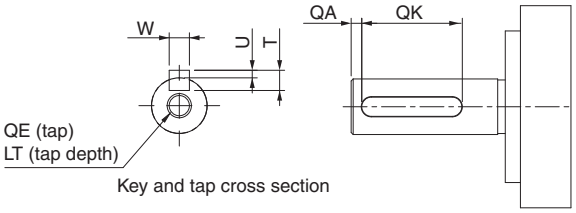

Model	Dimensions [mm]		
	LL	KB1	KB
R88M-1L75030C-B(O/S2/OS2)	180±2	56±1	165±2
R88M-1L1K030C-B(O/S2/OS2)	209±3	85±1	194±2
R88M-1L1K530C-B(O/S2/OS2)	209±3	85±1	194±2
R88M-1L2K030C-B(O/S2/OS2)	220±3	96±1	205±2

Model	Dimensions [mm]						
	QA	QK	W	T	U	QE	LT
R88M-1L75030C-B(S2/OS2)	3	42	$6^{0}_{-0.03}$	6	$2.5^{0}_{-0.2}$	M5	12
R88M-1L1K030C-B(S2/OS2)	3	42	$6^{0}_{-0.03}$	6	$2.5^{0}_{-0.2}$	M5	12
R88M-1L1K530C-B(S2/OS2)	3	42	$6^{0}_{-0.03}$	6	$2.5^{0}_{-0.2}$	M5	12
R88M-1L2K030C-B(S2/OS2)	3	42	$6^{0}_{-0.03}$	6	$2.5^{0}_{-0.2}$	M5	12

Note: The standard shaft type is a straight shaft. Models with a key and tap are indicated with “S2” at the end of the model number.
Models with an oil seal are indicated with “O” at the end of the model number.

3 kW (without Brake)

R88M-1L3K030C(-O/-S2/-OS2)

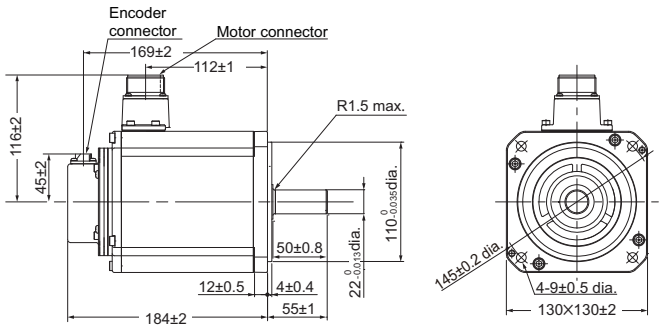

Shaft-end with key and tap

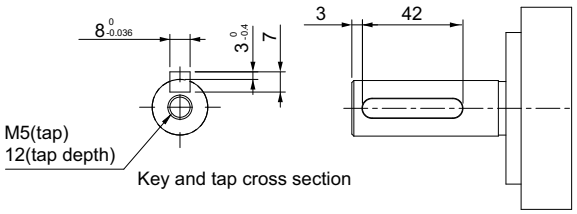

Note: The standard shaft type is a straight shaft. Models with a key and tap are indicated with “S2” at the end of the model number. Models with an oil seal are indicated with “O” at the end of the model number.

3 kW (with Brake)

R88M-1L3K030C-B(O/S2/OS2)

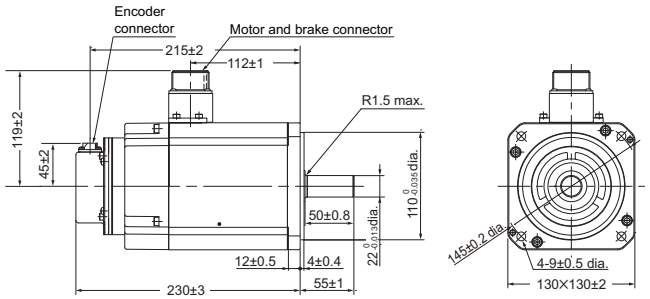

Shaft-end with key and tap

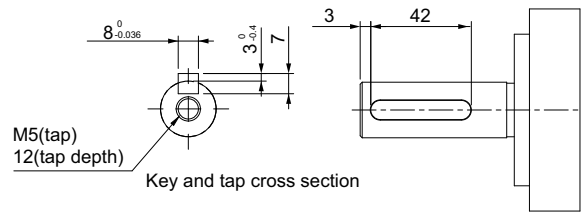

Note: The standard shaft type is a straight shaft. Models with a key and tap are indicated with “S2” at the end of the model number. Models with an oil seal are indicated with “O” at the end of the model number.

4 kW, 5 kW (without Brake)

R88M-1L4K030C(-O/-S2/-OS2)
R88M-1L5K030C(-O/-S2/-OS2)

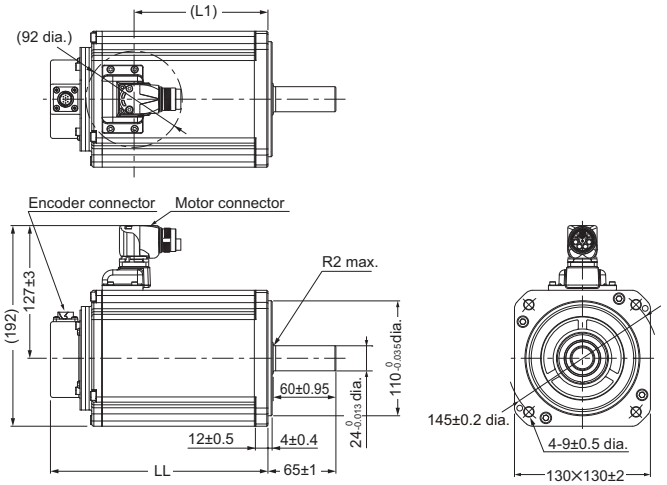

Shaft-end with key and tap

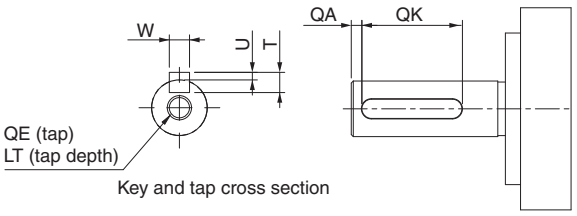

Model	Dimensions [mm]	
	LL	L1
R88M-1L4K030C(-O/-S2/-OS2)	208±3	128
R88M-1L5K030C(-O/-S2/-OS2)	232±3	152

Model	Dimensions [mm]						
	QA	QK	W	T	U	QE	LT
R88M-1L4K030C(-S2/-OS2)	3	52	$8^{0}_{-0.036}$	7	$3^{0}_{-0.4}$	M8	20
R88M-1L5K030C(-S2/-OS2)	3	52	$8^{0}_{-0.036}$	7	$3^{0}_{-0.4}$	M8	20

Note: The standard shaft type is a straight shaft. Models with a

4 kW, 5 kW (with Brake)

R88M-1L4K030C-B(O/S2/OS2)
R88M-1L5K030C-B(O/S2/OS2)

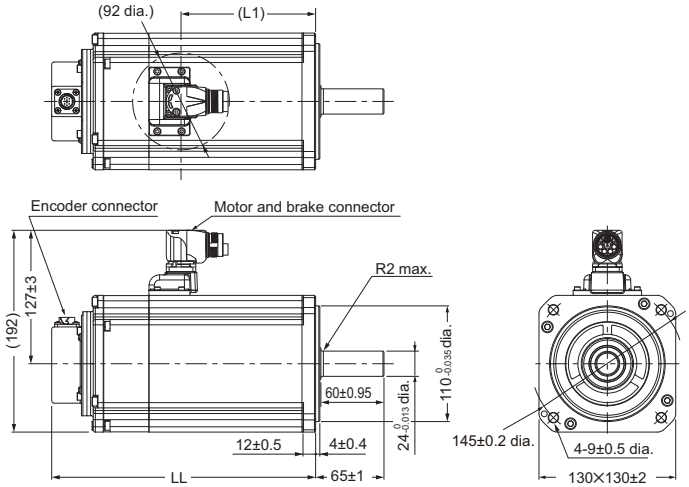

Shaft-end with key and tap

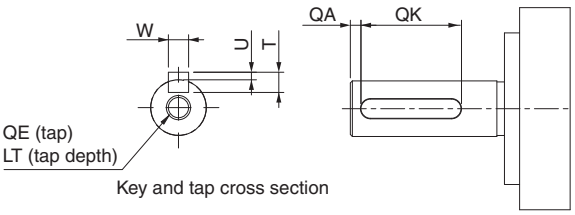

Model	Dimensions [mm]	
	LL	L1
R88M-1L4K030C-B(O/S2/OS2)	251±3	128
R88M-1L5K030C-B(O/S2/OS2)	275±3	152

Model	Dimensions [mm]						
	QA	QK	W	T	U	QE	LT
R88M-1L4K030C-B(S2/OS2)	3	52	$8^{0}_{-0.036}$	7	$3^{0}_{-0.4}$	M8	20
R88M-1L5K030C-B(S2/OS2)	3	52	$8^{0}_{-0.036}$	7	$3^{0}_{-0.4}$	M8	20

Note: The standard shaft type is a straight shaft. Models with a

2,000-r/min Servomotors (200 V)

1 kW/1.5 kW/2 kW (without Brake)

R88M-1M1K020T(-O/-S2/-OS2)
R88M-1M1K520T(-O/-S2/-OS2)
R88M-1M2K020T(-O/-S2/-OS2)

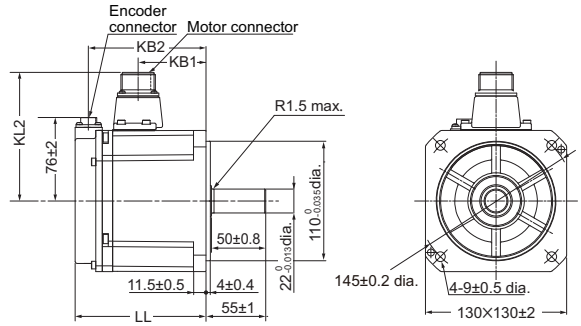

Shaft-end with key and tap

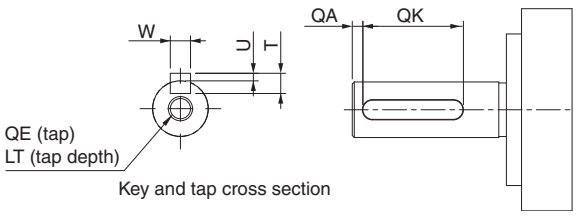

Model	Dimensions [mm]			
	LL	KB1	KB2	KL2
R88M-1M1K020T(-O/-S2/-OS2)	120.5±2	63±1	109±2	118±2
R88M-1M1K520T(-O/-S2/-OS2)	138±2	79±1	125±2	118±2
R88M-1M2K020T(-O/-S2/-OS2)	160±2	99±1	147±2	116±2

Model	Dimensions [mm]						
	QA	QK	W	T	U	QE	LT
R88M-1M1K020T(-S2/-OS2)	3	42	$8^{0}_{-0.036}$	7	$3^{0}_{-0.4}$	M5	12
R88M-1M1K520T(-S2/-OS2)	3	42	$8^{0}_{-0.036}$	7	$3^{0}_{-0.4}$	M5	12
R88M-1M2K020T(-S2/-OS2)	3	42	$8^{0}_{-0.036}$	7	$3^{0}_{-0.4}$	M5	12

Note: The standard shaft type is a straight shaft. Models with a key and tap are indicated with “S2” at the end of the model number. Models with an oil seal are indicated with “O” at the end of the model number.

1 kW/1.5 kW/2 kW (with Brake)

R88M-1M1K020T-B (O/S2/OS2)
R88M-1M1K520T-B(O/S2/OS2)
R88M-1M2K020T-B(O/S2/OS2)

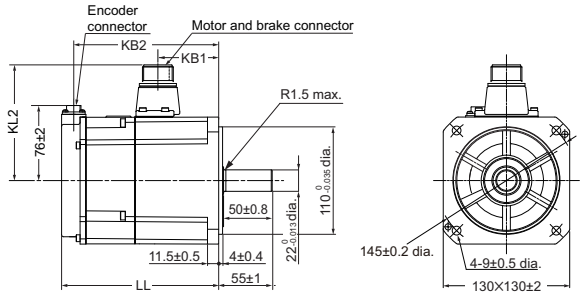

Shaft-end with key and tap

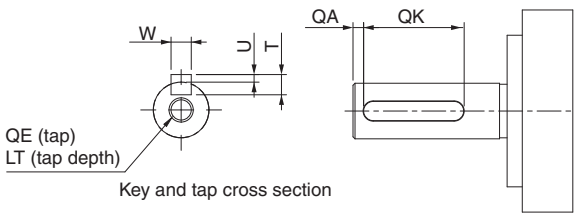

Model	Dimensions [mm]			
	LL	KB1	KB2	KL2
R88M-1M1K020T-B(O/S2/OS2)	162±2	63±1	149±2	118±2
R88M-1M1K520T-B(O/S2/OS2)	179±2	79±1	166±2	118±2
R88M-1M2K020T-B(O/S2/OS2)	201±3	99±1	189±2	119±2

Model	Dimensions [mm]						
	QA	QK	W	T	U	QE	LT
R88M-1M1K020T-B(S2/OS2)	3	42	$8^{0}_{-0.036}$	7	$3^{0}_{-0.4}$	M5	12
R88M-1M1K520T-B(S2/OS2)	3	42	$8^{0}_{-0.036}$	7	$3^{0}_{-0.4}$	M5	12
R88M-1M2K020T-B(S2/OS2)	3	42	$8^{0}_{-0.036}$	7	$3^{0}_{-0.4}$	M5	12

Note: The standard shaft type is a straight shaft. Models with a key and tap are indicated with “S2” at the end of the model number. Models with an oil seal are indicated with “O” at the end of the model number.

3 kW (without Brake)

R88M-1M3K020T(-O/-S2/-OS2)

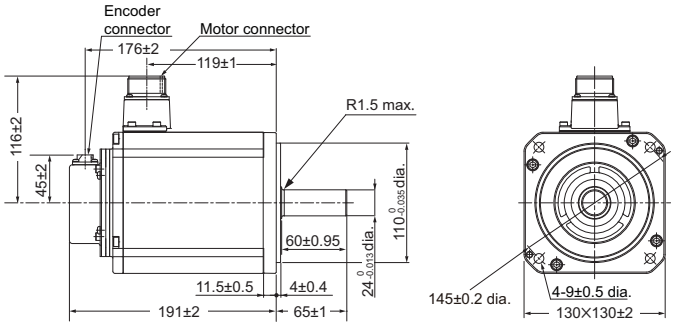

Shaft-end with key and tap

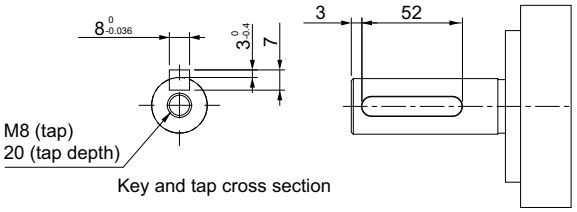

Note: The standard shaft type is a straight shaft. Models with a key and tap are indicated with “S2” at the end of the model number. Models with an oil seal are indicated with “O” at the end of the model number.

3 kW (with Brake)

R88M-1M3K020T-B(O/S2/OS2)

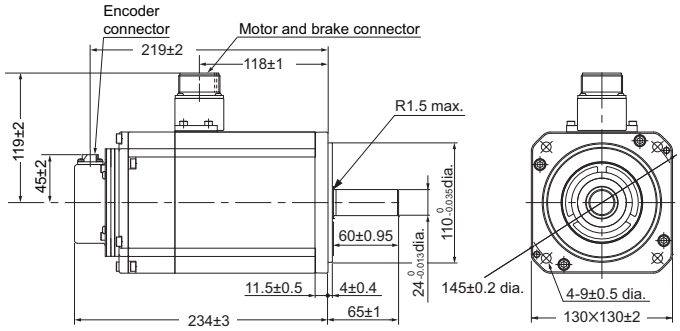

Shaft-end with key and tap

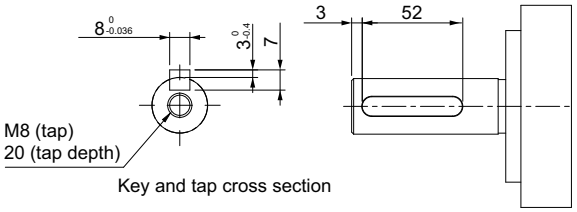

Note: The standard shaft type is a straight shaft. Models with a key and tap are indicated with “S2” at the end of the model number. Models with an oil seal are indicated with “O” at the end of the model number.

2,000-r/min Servomotors (400 V)

400 W/600 W (without Brake)

R88M-1M40020C(-O/-S2/-OS2)/R88M-1M60020C(-O/-S2/-OS2)

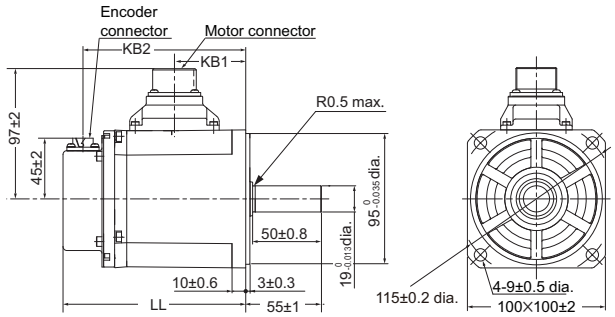

Shaft-end with key and tap

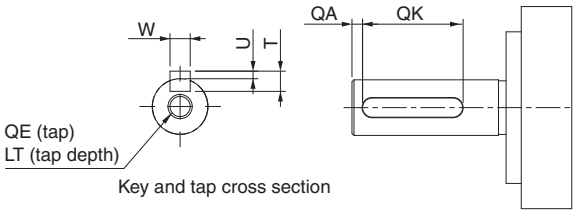

Model	Dimensions [mm]		
	LL	KB1	KB2
R88M-1M40020C(-O/-S2/-OS2)	134.8±1	52±1	120.5±2
R88M-1M60020C(-O/-S2/-OS2)	151.8±1	69±1	137.5±2

Model	Dimensions [mm]						
	QA	QK	W	T	U	QE	LT
R88M-1M40020C(-S2/-OS2)	3	42	$6^{0}_{-0.03}$	6	$2.5^{0}_{-0.2}$	M5	12
R88M-1M60020C(-S2/-OS2)	3	42	$6^{0}_{-0.03}$	6	$2.5^{0}_{-0.2}$	M5	12

Note: The standard shaft type is a straight shaft. Models with a key and tap are indicated with “S2” at the end of the model number. Models with an oil seal are indicated with “O” at the end of the model number.

400 W/600 W (with Brake)

R88M-1M40020C-B(O/S2/OS2)/R88M-1M60020C-B(O/S2/OS2)

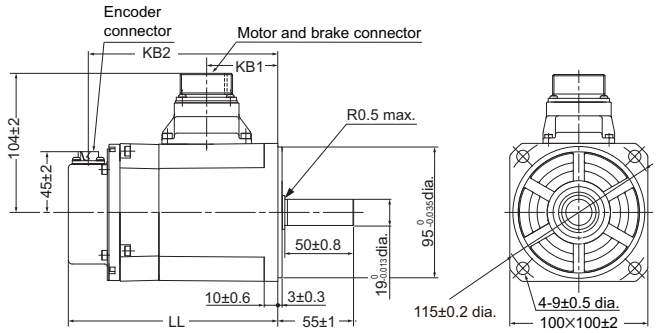

Shaft-end with key and tap

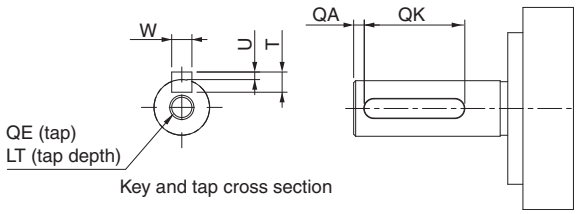

Model	Dimensions [mm]		
	LL	KB1	KB2
R88M-1M40020C-B(O/S2/OS2)	152.3±1	52±1	138±2
R88M-1M60020C-B(O/S2/OS2)	169.3±1	69±1	155±2

Model	Dimensions [mm]						
	QA	QK	W	T	U	QE	LT
R88M-1M40020C-B(S2/OS2)	3	42	$6^{0}_{-0.03}$	6	$2.5^{0}_{-0.2}$	M5	12
R88M-1M60020C-B(S2/OS2)	3	42	$6^{0}_{-0.03}$	6	$2.5^{0}_{-0.2}$	M5	12

Note: The standard shaft type is a straight shaft. Models with a key and tap are indicated with “S2” at the end of the model number. Models with an oil seal are indicated with “O” at the end of the model number.

1 kW/1.5 kW/2 kW (without Brake)

R88M-1M1K020C(-O/-S2/-OS2)
R88M-1M1K520C(-O/-S2/-OS2)
R88M-1M2K020C(-O/-S2/-OS2)

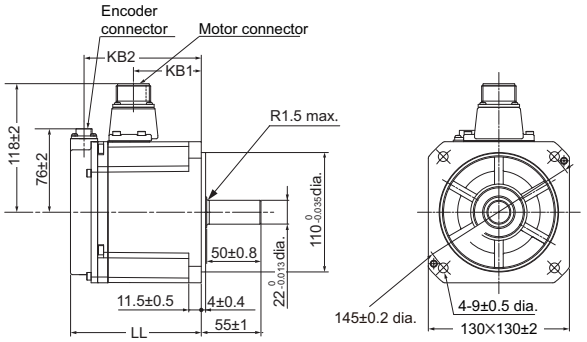

Model	Dimensions [mm]		
	LL	KB1	KB2
R88M-1M1K020C(-O/-S2/-OS2)	120.5±2	63±1	109±2
R88M-1M1K520C(-O/-S2/-OS2)	138±2	79±1	125±2
R88M-1M2K020C(-O/-S2/-OS2)	160±2	98±1	148±2

Note: The standard shaft type is a straight shaft. Models with a key and tap are indicated with "S2" at the end of the model number.
Models with an oil seal are indicated with "O" at the end of the model number.

Shaft-end with key and tap

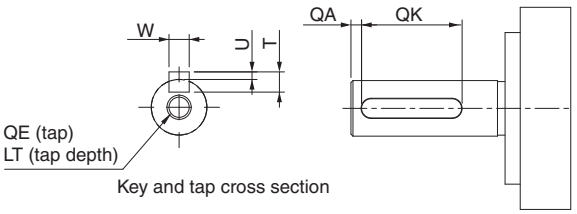

Model	Dimensions [mm]						
	QA	QK	W	T	U	QE	LT
R88M-1M1K020C(-S2/-OS2)	3	42	$8^{0}_{-0.036}$	7	$3^{0}_{-0.4}$	M5	12
R88M-1M1K520C(-S2/-OS2)	3	42	$8^{0}_{-0.036}$	7	$3^{0}_{-0.4}$	M5	12
R88M-1M2K020C(-S2/-OS2)	3	42	$8^{0}_{-0.036}$	7	$3^{0}_{-0.4}$	M5	12

1 kW/1.5 kW/2 kW (with Brake)

R88M-1M1K020C-B(O/S2/OS2)
R88M-1M1K520C-B(O/S2/OS2)
R88M-1M2K020C-B(O/S2/OS2)

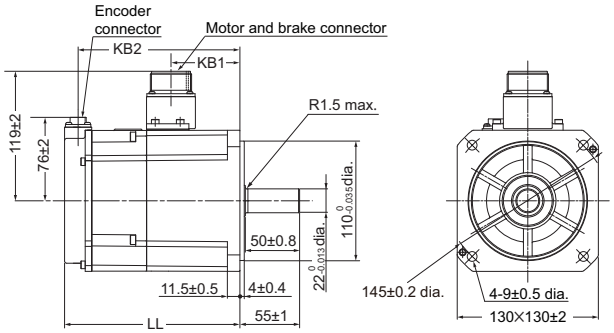

Model	Dimensions [mm]		
	LL	KB1	KB2
R88M-1M1K020C-B(O/S2/OS2)	162±2	64±1	150±2
R88M-1M1K520C-B(O/S2/OS2)	179±2	81±1	167±2
R88M-1M2K020C-B(O/S2/OS2)	201±3	99±1	189±2

Note: The standard shaft type is a straight shaft. Models with a key and tap are indicated with "S2" at the end of the model number.
Models with an oil seal are indicated with "O" at the end of the model number.

Shaft-end with key and tap

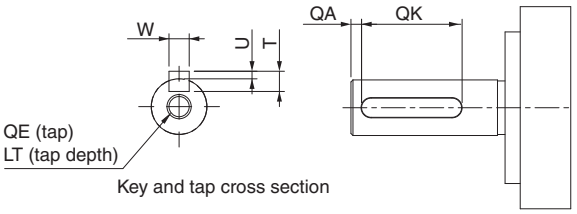

Model	Dimensions [mm]						
	QA	QK	W	T	U	QE	LT
R88M-1M1K020C-B(S2/OS2)	3	42	$8^{0}_{-0.036}$	7	$3^{0}_{-0.4}$	M5	12
R88M-1M1K520C-B(S2/OS2)	3	42	$8^{0}_{-0.036}$	7	$3^{0}_{-0.4}$	M5	12
R88M-1M2K020C-B(S2/OS2)	3	42	$8^{0}_{-0.036}$	7	$3^{0}_{-0.4}$	M5	12

3 kW (without Brake)

R88M-1M3K020C(-O/-S2/-OS2)

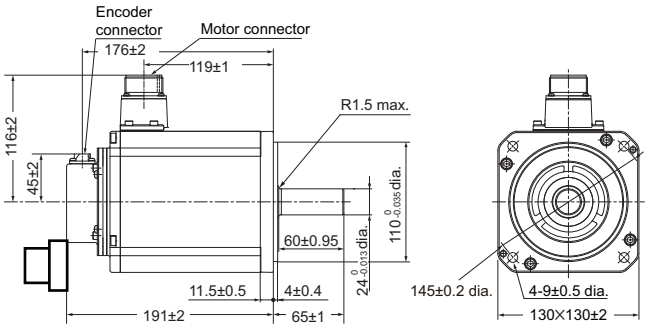

Shaft-end with key and tap

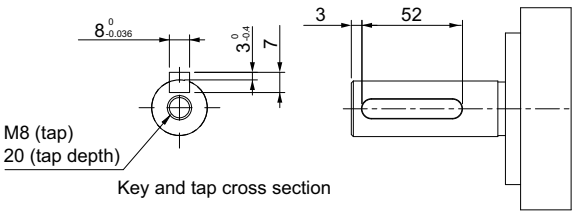

Note: The standard shaft type is a straight shaft. Models with a key and tap are indicated with “S2” at the end of the model number. Models with an oil seal are indicated with “O” at the end of the model number.

3 kW (with Brake)

R88M-1M3K020C-B(O/S2/OS2)

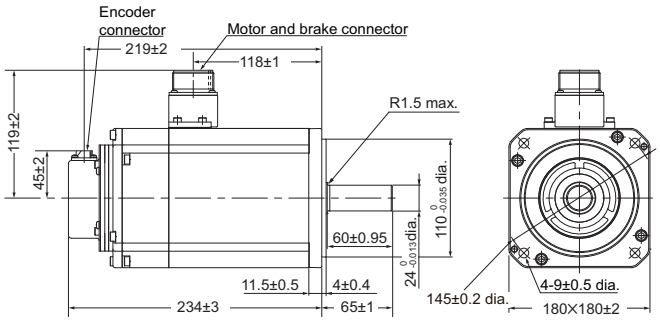

Shaft-end with key and tap

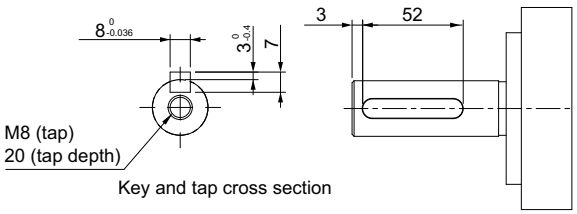

Note: The standard shaft type is a straight shaft. Models with a key and tap are indicated with “S2” at the end of the model number. Models with an oil seal are indicated with “O” at the end of the model number.

1,500-r/min Servomotors (200 V)

4 kW (without Brake)

R88M-1M4K015T(-O/-S2/-OS2) (Available soon)

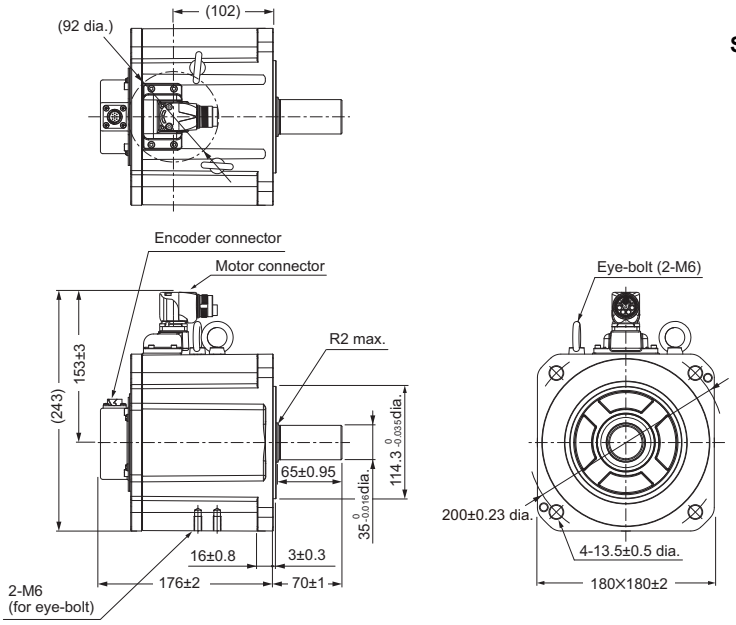

Shaft-end with key and tap

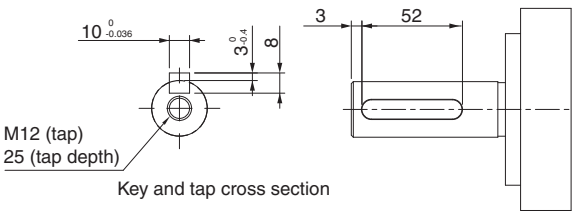

Note: The standard shaft type is a straight shaft. Models with a key and tap are indicated with “S2” at the end of the model number. Models with an oil seal are indicated with “O” at the end of the model number.

4 kW (with Brake)

R88M-1M4K015T-B(O/S2/OS2) (Available soon)

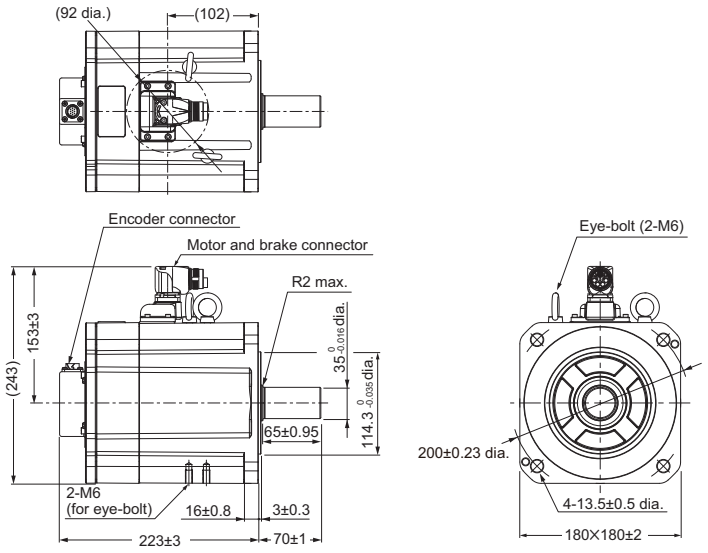

Shaft-end with key and tap

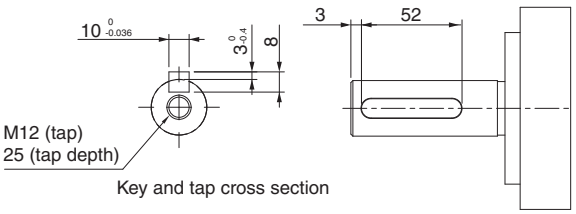

Note: The standard shaft type is a straight shaft. Models with a key and tap are indicated with “S2” at the end of the model number. Models with an oil seal are indicated with “O” at the end of the model number.

5.5 kW (without Brake)

R88M-1M5K515T(-O/-S2/-OS2) (Available soon)

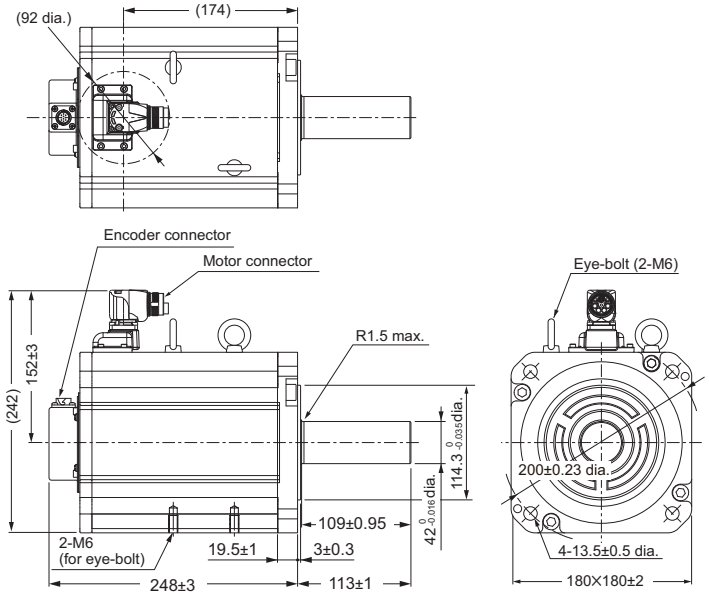

Shaft-end with key and tap

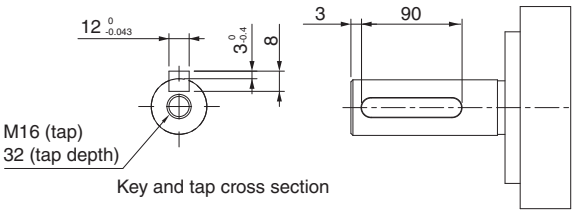

Note: The standard shaft type is a straight shaft. Models with a key and tap are indicated with “S2” at the end of the model number. Models with an oil seal are indicated with “O” at the end of the model number.

5.5 kW (with Brake)

R88M-1M5K515T-B(O/S2/OS2) (Available soon)

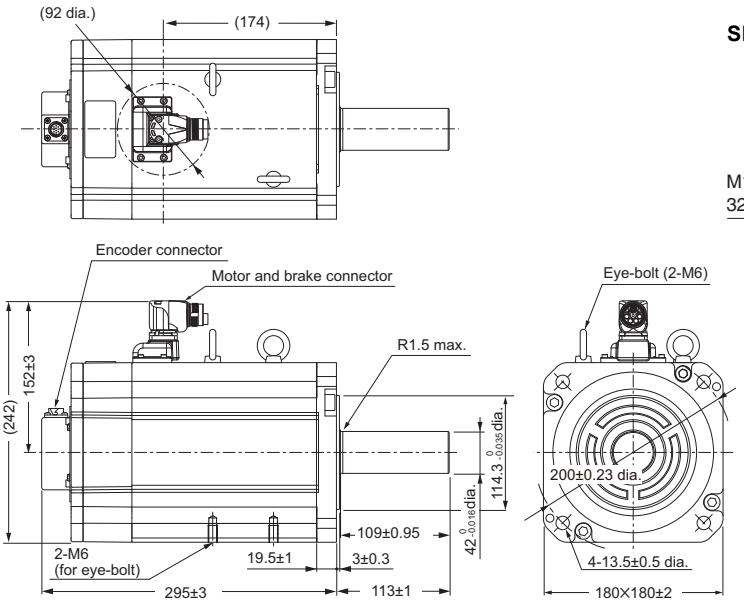

Shaft-end with key and tap

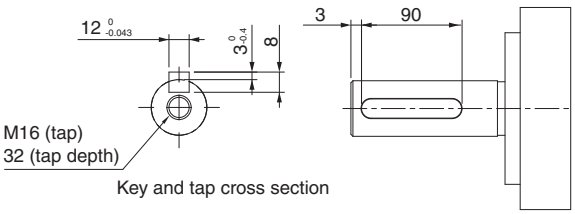

Note: The standard shaft type is a straight shaft. Models with a key and tap are indicated with “S2” at the end of the model number. Models with an oil seal are indicated with “O” at the end of the model number.

7.5 kW (without Brake)

R88M-1M7K515T(-O/-S2/-OS2)

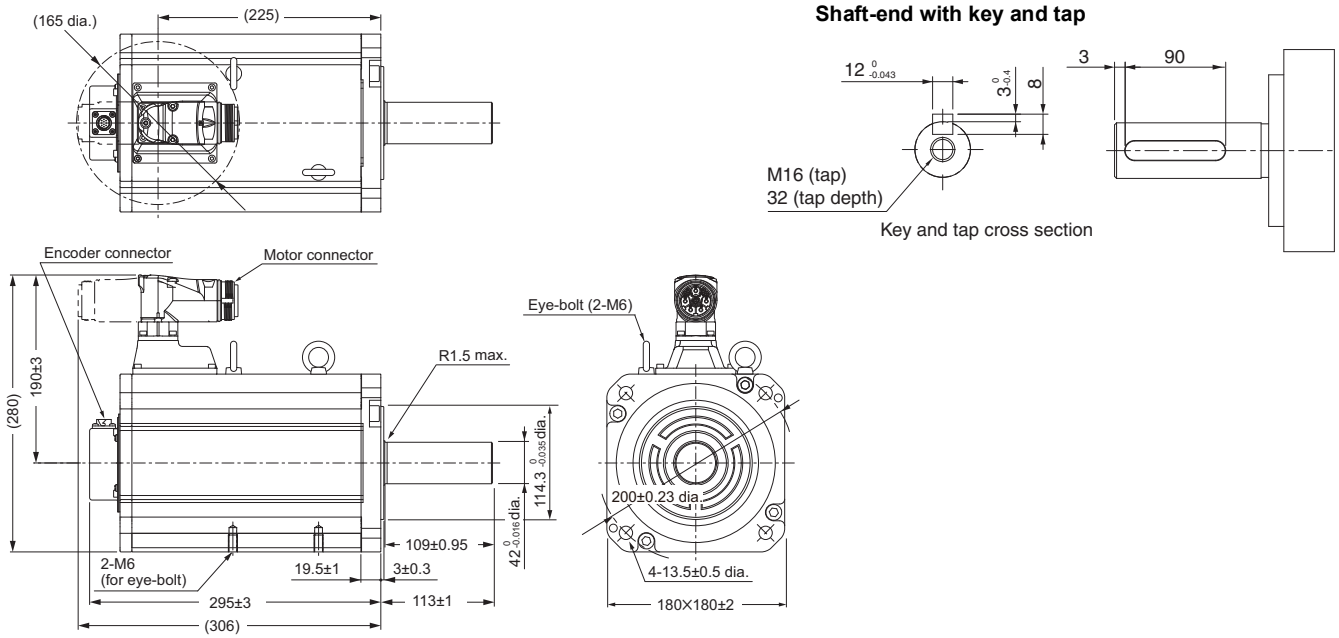

Note: The standard shaft type is a straight shaft. Models with a key and tap are indicated with “S2” at the end of the model number. Models with an oil seal are indicated with “O” at the end of the model number.

7.5 kW (with Brake)

R88M-1M7K515T-B(O/S2/OS2)

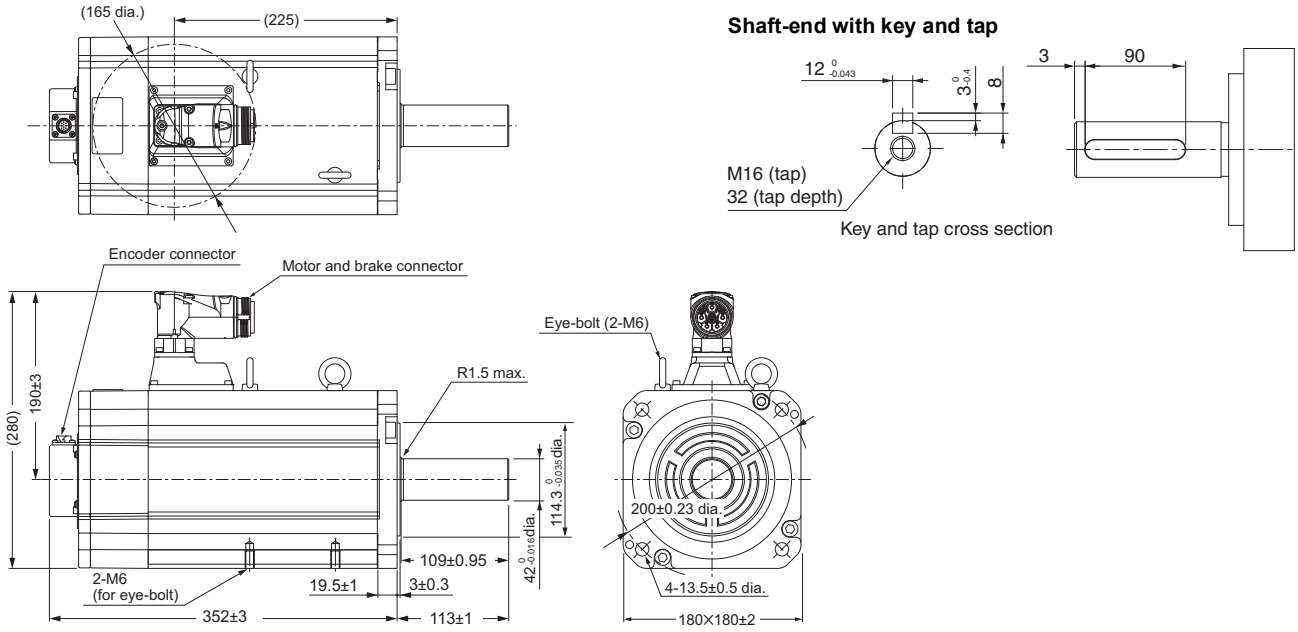

Note: The standard shaft type is a straight shaft. Models with a key and tap are indicated with “S2” at the end of the model number. Models with an oil seal are indicated with “O” at the end of the model number.

11 kW/15 kW (without Brake)

R88M-1M11K015T(-O/-S2/-OS2)
R88M-1M15K015T(-O/-S2/-OS2)

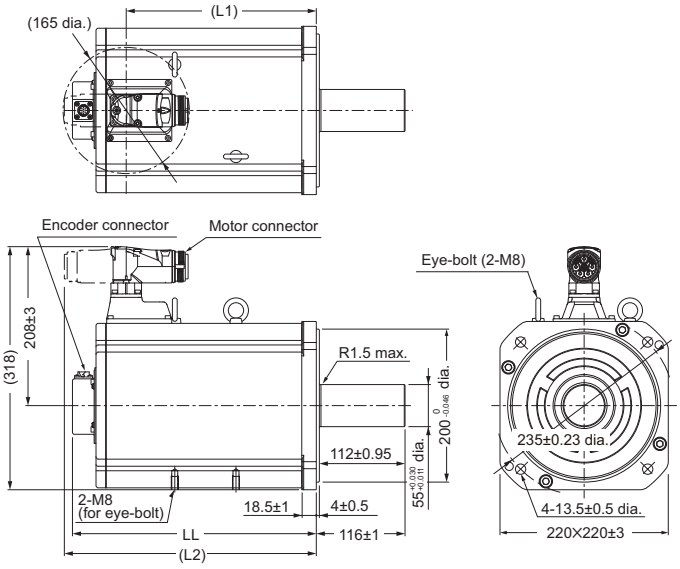

Shaft-end with key and tap

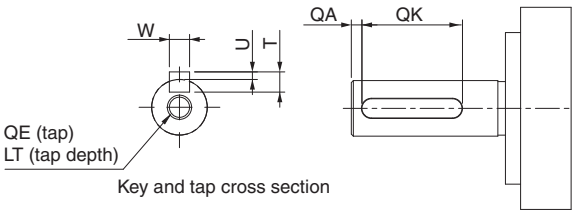

Model	Dimensions [mm]		
	LL	L1	L2
R88M-1M11K015T(-O/-S2/-OS2)	319±3	249	330
R88M-1M15K015T(-O/-S2/-OS2)	397±3	327	408

Model	Dimensions [mm]						
	QA	QK	W	T	U	QE	LT
R88M-1M11K015T(-S2/-OS2)	3	93	$16^{0}_{-0.043}$	10	$4^{0}_{-0.4}$	M20	40
R88M-1M15K015T(-S2/-OS2)	3	93	$16^{0}_{-0.043}$	10	$4^{0}_{-0.4}$	M20	40

Note: The standard shaft type is a straight shaft. Models with a key and tap are indicated with “S2” at the end of the model number. Models with an oil seal are indicated with “O” at the end of the

11 kW/15 kW (with Brake)

R88M-1M11K015T-B(O/S2/OS2)
R88M-1M15K015T-B(O/S2/OS2)

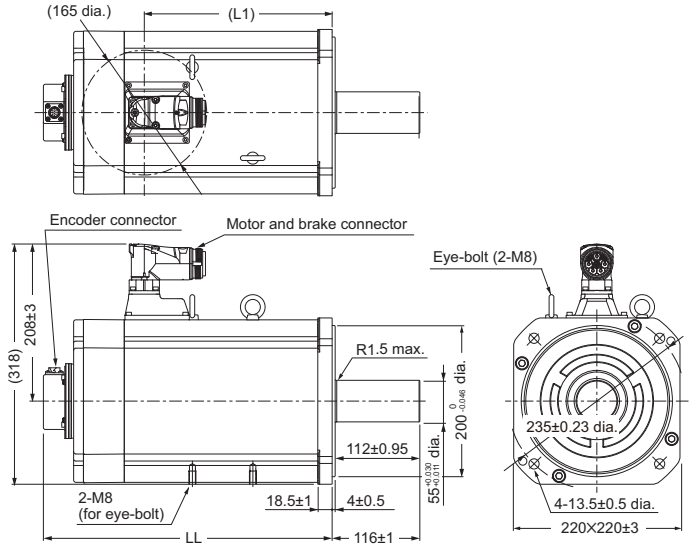

Shaft-end with key and tap

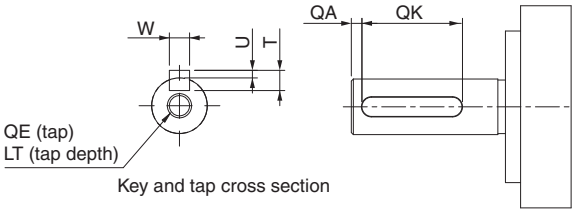

Model	Dimensions [mm]	
	LL	L1
R88M-1M11K015T-B(O/S2/OS2)	382±3	249
R88M-1M15K015T-B(O/S2/OS2)	493±3	327

Model	Dimensions [mm]						
	QA	QK	W	T	U	QE	LT
R88M-1M11K015T-B(S2/OS2)	3	93	$16^{0}_{-0.043}$	10	$4^{0}_{-0.4}$	M20	40
R88M-1M15K015T-B(S2/OS2)	3	93	$16^{0}_{-0.043}$	10	$4^{0}_{-0.4}$	M20	40

Note: The standard shaft type is a straight shaft. Models with a key and tap are indicated with “S2” at the end of the model number. Models with an oil seal are indicated with “O” at the end of the model number.

1,500-r/min Servomotors (400 V)

4 kW (without Brake)

R88M-1M4K015C(-O/-S2/-OS2)

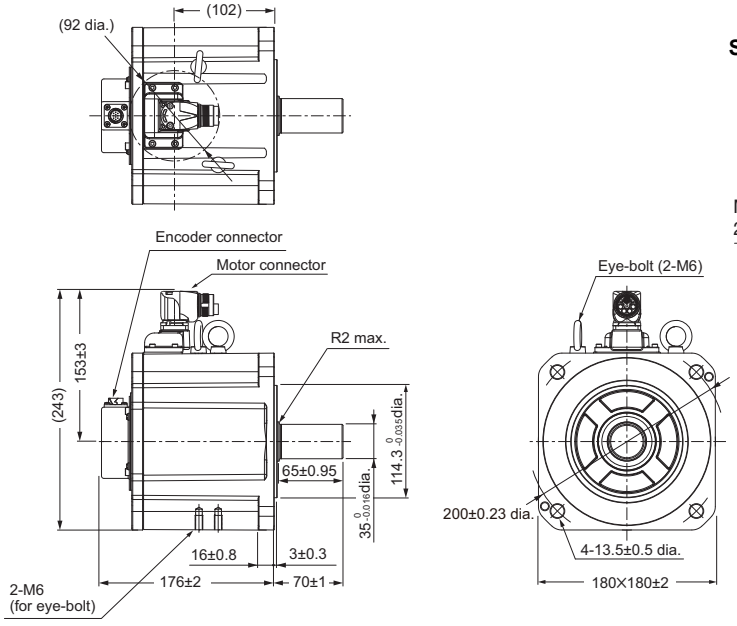

Shaft-end with key and tap

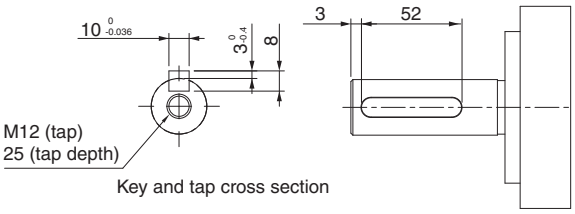

Note: The standard shaft type is a straight shaft. Models with a key and tap are indicated with “S2” at the end of the model number. Models with an oil seal are indicated with “O” at the end of the model number.

4 kW (with Brake)

R88M-1M4K015C-B(O/S2/OS2)

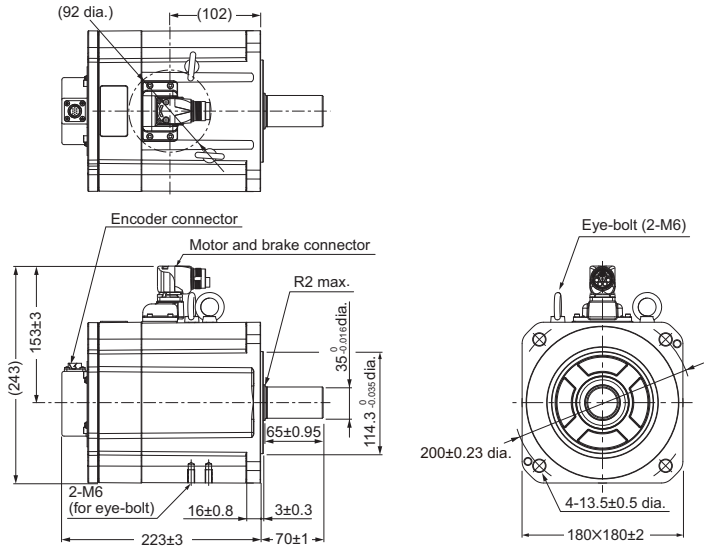

Shaft-end with key and tap

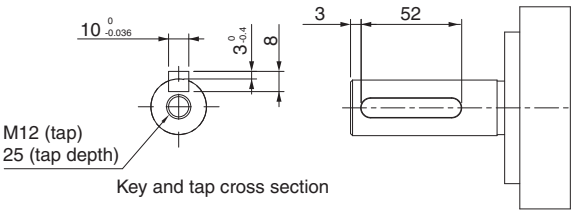

Note: The standard shaft type is a straight shaft. Models with a key and tap are indicated with “S2” at the end of the model number. Models with an oil seal are indicated with “O” at the end of the model number.

5.5 kW/7.5 kW (without Brake)

R88M-1M5K515C(-O/-S2/-OS2)
R88M-1M7K515C(-O/-S2/-OS2)

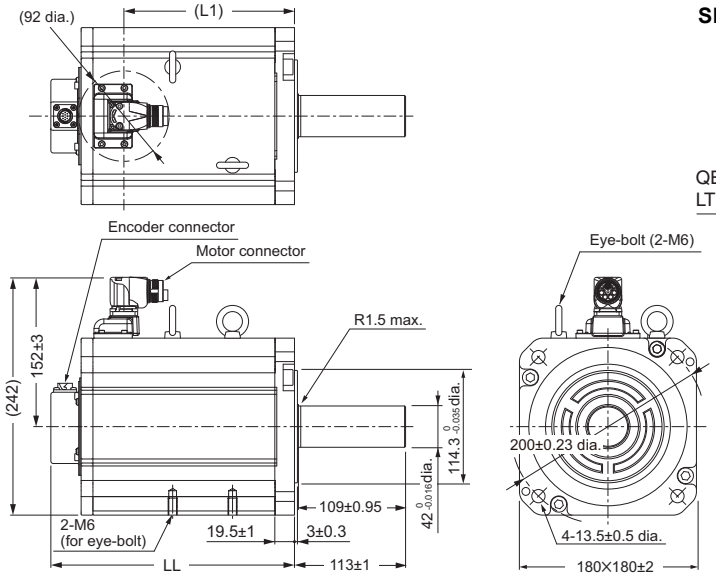

Shaft-end with key and tap

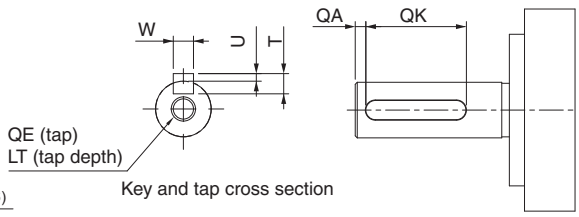

Model	Dimensions [mm]	
	LL	L1
R88M-1M5K515C(-O/-S2/-OS2)	248±3	174
R88M-1M7K515C(-O/-S2/-OS2)	295±3	221

Model	Dimensions [mm]						
	QA	QK	W	T	U	QE	LT
R88M-1M5K515C (-S2/-OS2)	3	90	$12^{0}_{-0.043}$	8	$3^{0}_{-0.4}$	M16	32
R88M-1M7K515C (-S2/-OS2)	3	90	$12^{0}_{-0.043}$	8	$3^{0}_{-0.4}$	M16	32

Note: The standard shaft type is a straight shaft. Models with a key and tap are indicated with “S2” at the end of the model number. Models with an oil seal are indicated with “O” at the end of the model number.

5.5 kW/7.5 kW (with Brake)

R88M-1M5K515C-B(O/S2/OS2)
R88M-1M7K515C-B(O/S2/OS2)

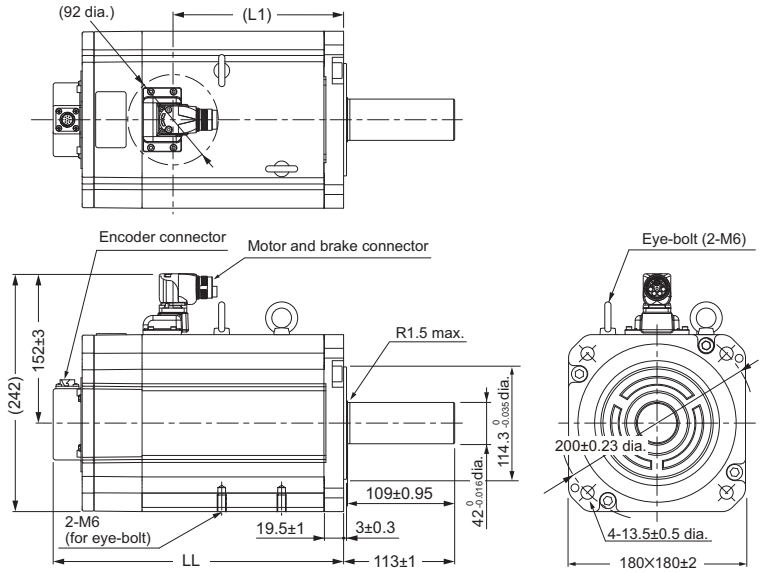

Shaft-end with key and tap

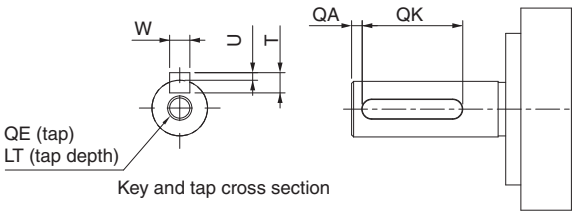

Model	Dimensions [mm]	
	LL	L1
R88M-1M5K515C-B(O/S2/OS2)	295±3	174
R88M-1M7K515C-B(O/S2/OS2)	352±3	221

Model	Dimensions [mm]						
	QA	QK	W	T	U	QE	LT
R88M-1M5K515C-B (S2/OS2)	3	90	$12^{0}_{-0.043}$	8	$3^{0}_{-0.4}$	M16	32
R88M-1M7K515C-B (S2/OS2)	3	90	$12^{0}_{-0.043}$	8	$3^{0}_{-0.4}$	M16	32

Note: The standard shaft type is a straight shaft. Models with a key and tap are indicated with “S2” at the end of the model number. Models with an oil seal are indicated with “O” at the end of the model number.

11 kW/15 kW (without Brake)

R88M-1M11K015C(-O/-S2/-OS2)
R88M-1M15K015C(-O/-S2/-OS2)

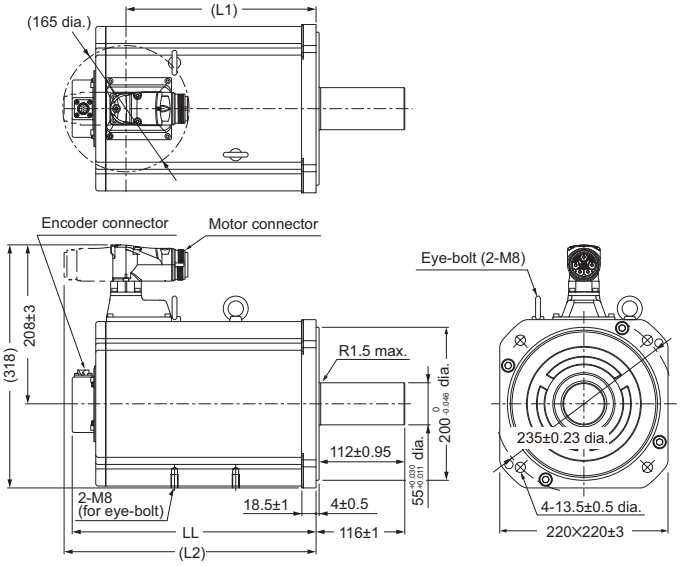

Shaft-end with key and tap

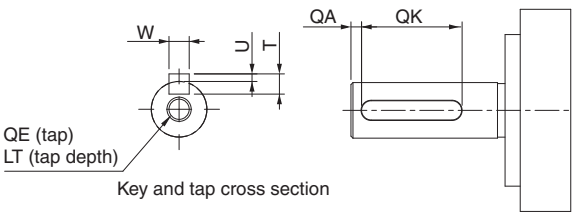

Model	Dimensions [mm]		
	LL	L1	L2
R88M-1M11K015C(-O/-S2/-OS2)	319±3	249	330
R88M-1M15K015C(-O/-S2/-OS2)	397±3	327	408

Model	Dimensions [mm]						
	QA	QK	W	T	U	QE	LT
R88M-1M11K015C(-S2/-OS2)	3	93	$16^{0}_{-0.043}$	10	$4^{0}_{-0.4}$	M20	40
R88M-1M15K015C(-S2/-OS2)	3	93	$16^{0}_{-0.043}$	10	$4^{0}_{-0.4}$	M20	40

Note: The standard shaft type is a straight shaft. Models with a key and tap are indicated with “S2” at the end of the model number. Models with an oil seal are indicated with “O” at the end of the model number.

11 kW/15 kW (with Brake)

R88M-1M11K015C-B(O/S2/OS2)
R88M-1M15K015C-B(O/S2/OS2)

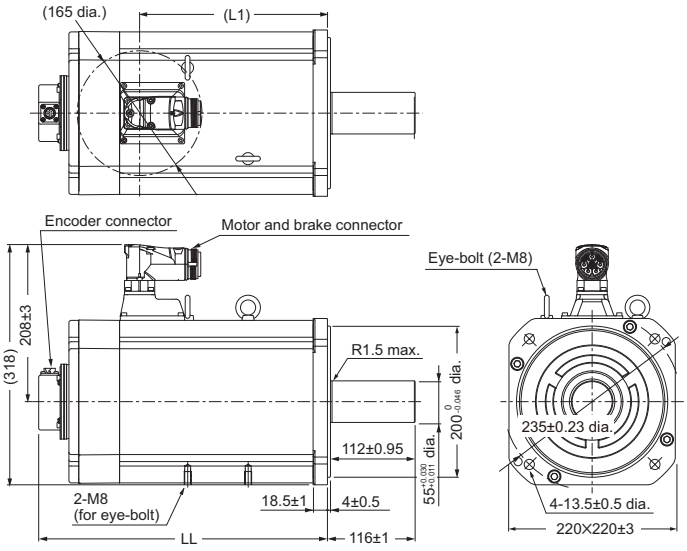

Shaft-end with key and tap

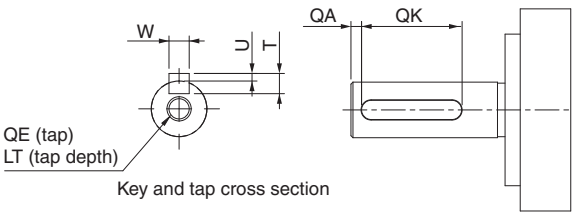

Model	Dimensions [mm]	
	LL	L1
R88M-1M11K015C-B(O/S2/OS2)	382±3	249
R88M-1M15K015C-B(O/S2/OS2)	493±3	327

Model	Dimensions [mm]						
	QA	QK	W	T	U	QE	LT
R88M-1M11K015C-B(S2/OS2)	3	93	$16^{0}_{-0.043}$	10	$4^{0}_{-0.4}$	M20	40
R88M-1M15K015C-B(S2/OS2)	3	93	$16^{0}_{-0.043}$	10	$4^{0}_{-0.4}$	M20	40

Note: The standard shaft type is a straight shaft. Models with a key and tap are indicated with “S2” at the end of the model number. Models with an oil seal are indicated with “O” at the end of the model number.

1,000-r/min Servomotors (200 V)

900 W (without Brake)

R88M-1M90010T(-O/-S2/-OS2)

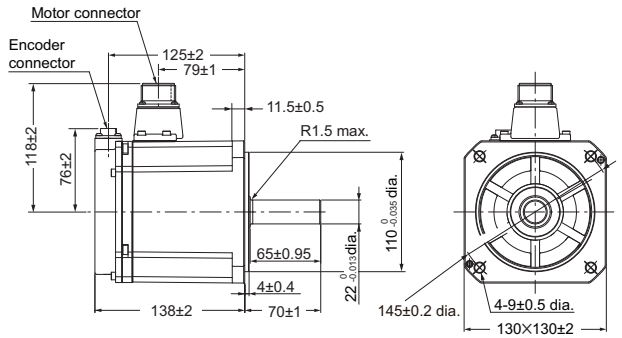

Shaft-end with key and tap

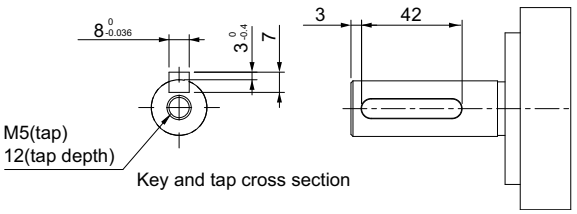

Note: The standard shaft type is a straight shaft. Models with a key and tap are indicated with “S2” at the end of the model number. Models with an oil seal are indicated with “O” at the end of the model number.

900 W (with Brake)

R88M-1M90010T-B(O/S2/OS2)

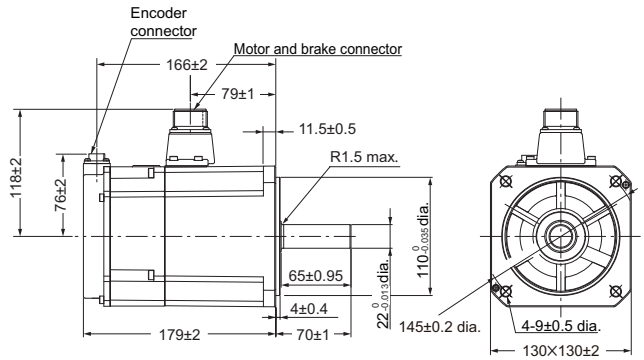

Shaft-end with key and tap

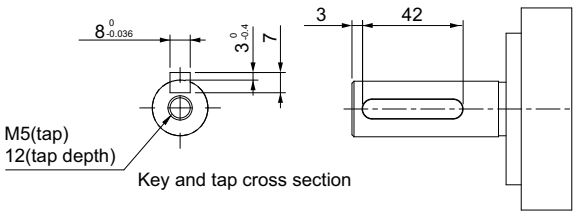

Note: The standard shaft type is a straight shaft. Models with a key and tap are indicated with “S2” at the end of the model number. Models with an oil seal are indicated with “O” at the end of the model number.

2 kW (without Brake)

R88M-1M2K010T(-O/-S2/-OS2)

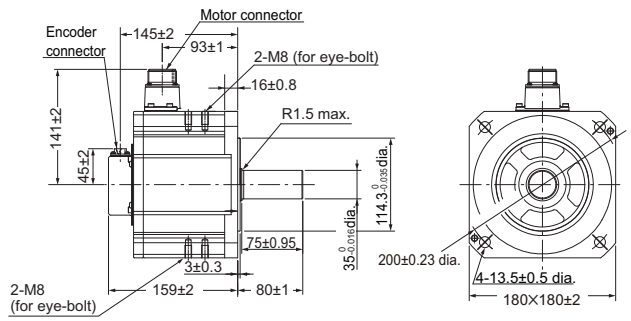

Shaft-end with key and tap

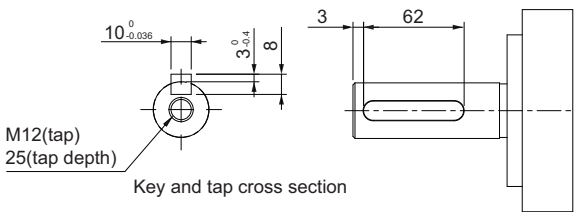

Note: The standard shaft type is a straight shaft. Models with a key and tap are indicated with “S2” at the end of the model number. Models with an oil seal are indicated with “O” at the end of the model number.

2 kW (with Brake)

R88M-1M2K010T-B(O/S2/OS2)

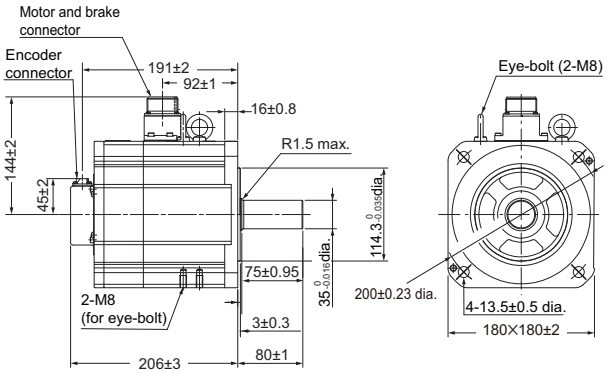

Shaft-end with key and tap

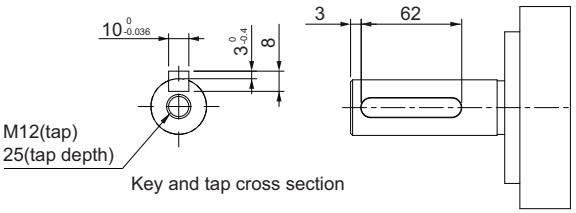

Note: The standard shaft type is a straight shaft. Models with a key and tap are indicated with “S2” at the end of the model number. Models with an oil seal are indicated with “O” at the end of the model number.

3 kW (without Brake)

R88M-1M3K010T(-O/-S2/-OS2)

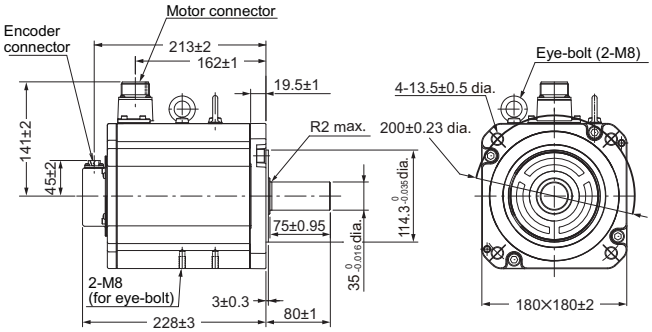

Shaft-end with key and tap

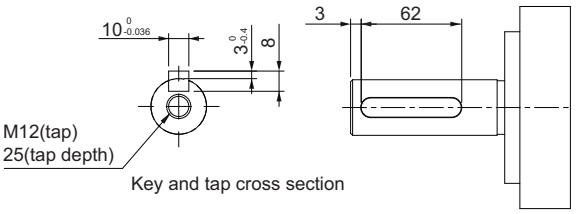

Note: The standard shaft type is a straight shaft. Models with a key and tap are indicated with “S2” at the end of the model number. Models with an oil seal are indicated with “O” at the end of the model number.

3 kW (with Brake)

R88M-1M3K010T-B(O/S2/OS2)

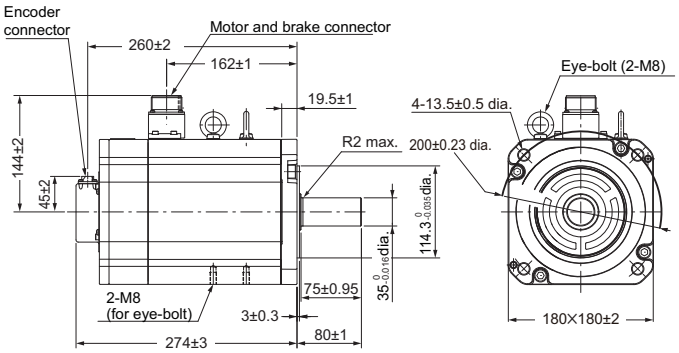

Shaft-end with key and tap

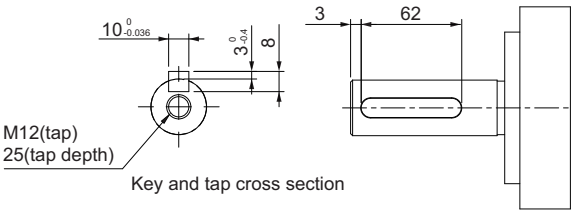

Note: The standard shaft type is a straight shaft. Models with a key and tap are indicated with “S2” at the end of the model number. Models with an oil seal are indicated with “O” at the end of the model number.

1,000-r/min Servomotors (400 V)

900 W (without Brake)

R88M-1M90010C(-O/-S2/-OS2)

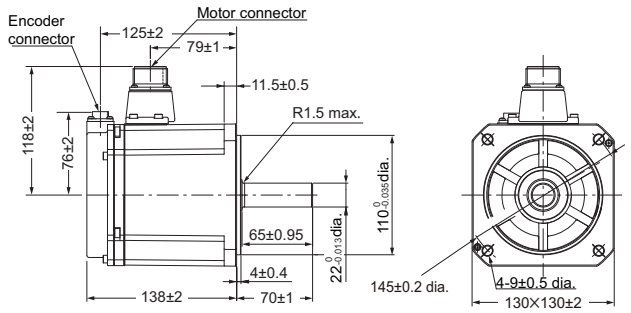

Shaft-end with key and tap

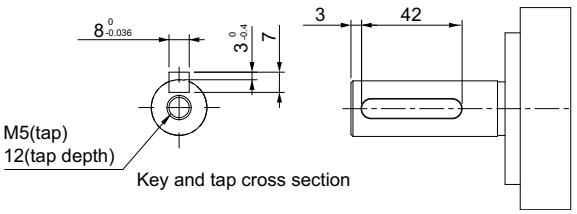

Note: The standard shaft type is a straight shaft. Models with a key and tap are indicated with “S2” at the end of the model number. Models with an oil seal are indicated with “O” at the end of the model number.

900 W (with Brake)

R88M-1M90010C-B(O/S2/OS2)

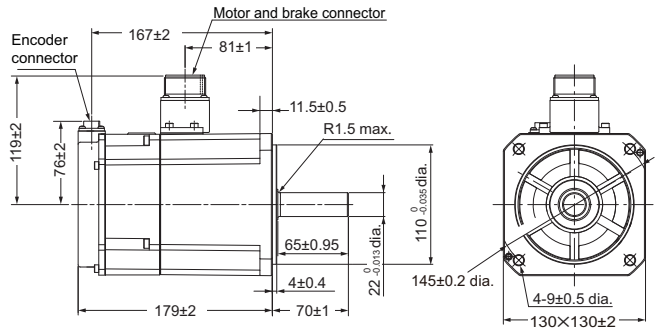

Shaft-end with key and tap

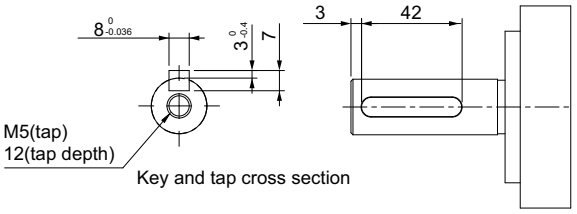

Note: The standard shaft type is a straight shaft. Models with a key and tap are indicated with “S2” at the end of the model number. Models with an oil seal are indicated with “O” at the end of the model number.

2 kW (without Brake)

R88M-1M2K010C(-O/-S2/-OS2)

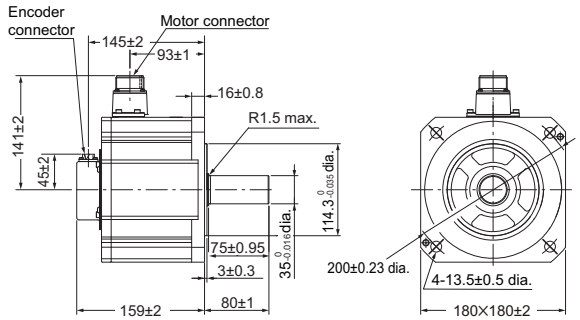

Shaft-end with key and tap

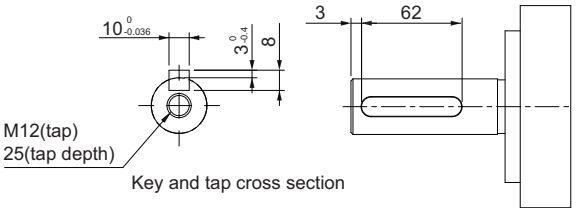

Note: The standard shaft type is a straight shaft. Models with a key and tap are indicated with “S2” at the end of the model number. Models with an oil seal are indicated with “O” at the end of the model number.

2 kW (with Brake)

R88M-1M2K010C-B(O/S2/OS2)

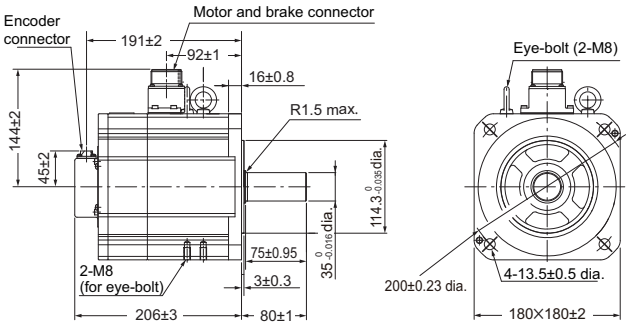

Note: The standard shaft type is a straight shaft. Models with a key and tap are indicated with “S2” at the end of the model number. Models with an oil seal are indicated with “O” at the end of the model number.

Shaft-end with key and tap

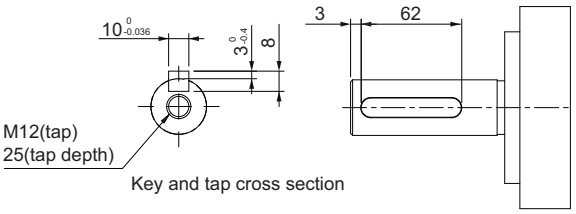

3 kW (without Brake)

R88M-1M3K010C(-O/-S2/-OS2)

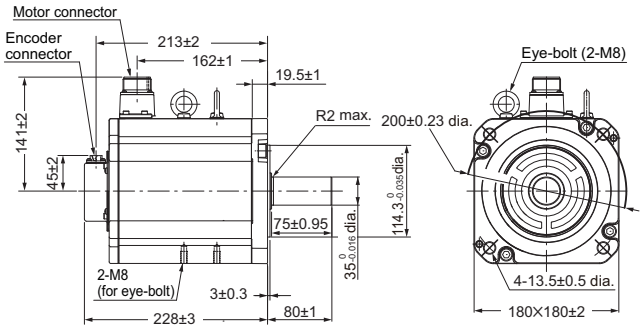

Note: The standard shaft type is a straight shaft. Models with a key and tap are indicated with “S2” at the end of the model number. Models with an oil seal are indicated with “O” at the end of the model number.

Shaft-end with key and tap

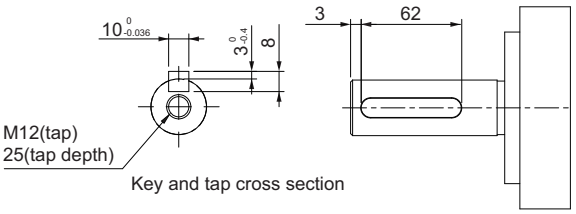

3 kW (with Brake)

R88M-1M3K010C-B(O/S2/OS2)

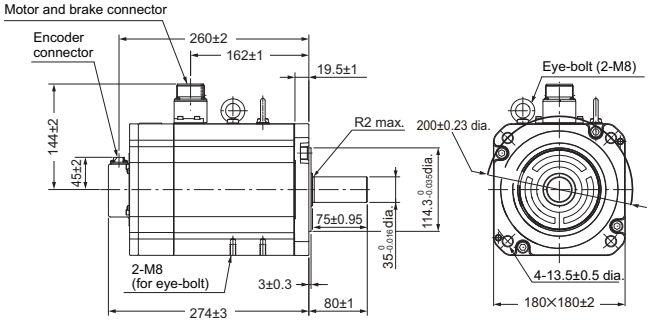

Note: The standard shaft type is a straight shaft. Models with a key and tap are indicated with “S2” at the end of the model number. Models with an oil seal are indicated with “O” at the end of the model number.

Shaft-end with key and tap

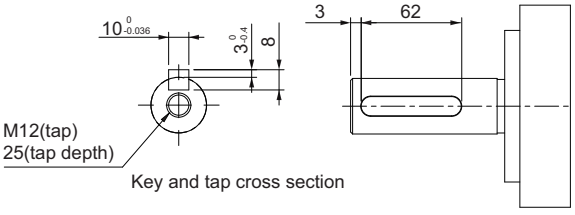

Cable Outlet Direction of Connector

The cable outlet direction of the servomotor for connector type M23 or M40 can be selected. The below shows the selectable range.
The change of the cable outlet direction shall be up to five times. For a procedure of the change of the cable outlet direction, refer to the *AC Servomotors/Servo Drives 1S-series with Built-in EtherCAT® Communications User's Manual* (Cat.No.I586).

Cable Outlet Direction of Connector Type M23

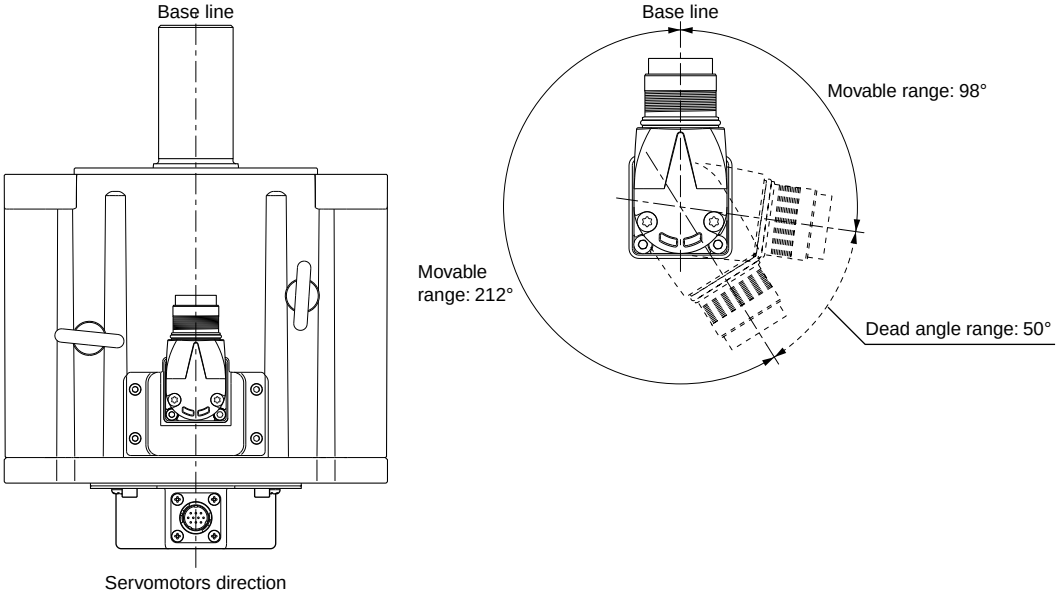

Cable Outlet Direction of Connector Type M40

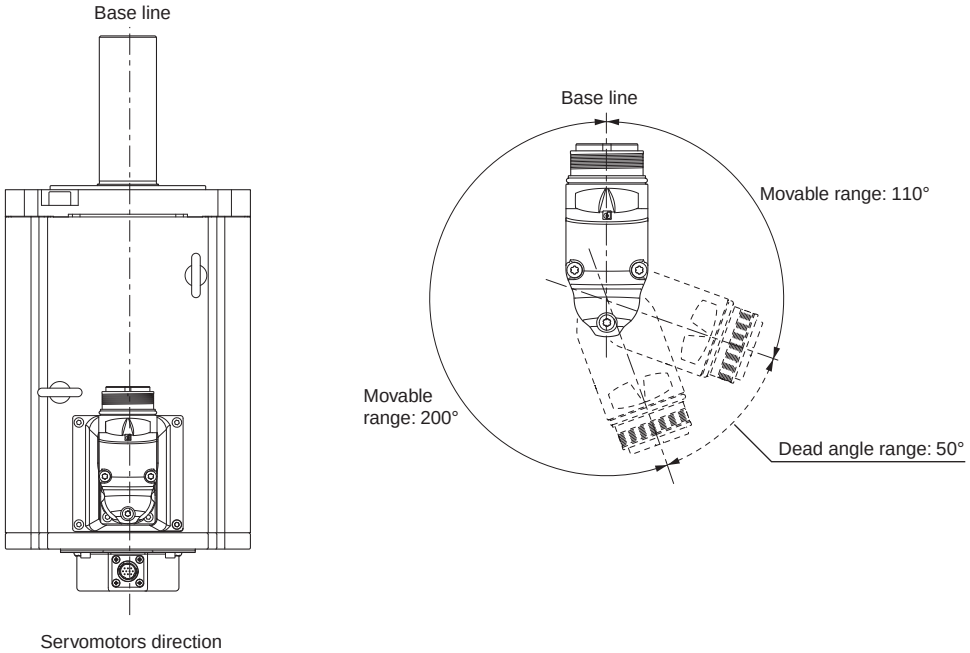

Cable Wiring Dimension for a Case of Servo Motor Installing

Cable wiring dimensions are shown below the table when you install a Servomotor with connector type M23 or connector type M40.
The dimensions from the rotation center of the connector to the cable surrounding are indicated as A.

Servo Motor for Connector Type M23

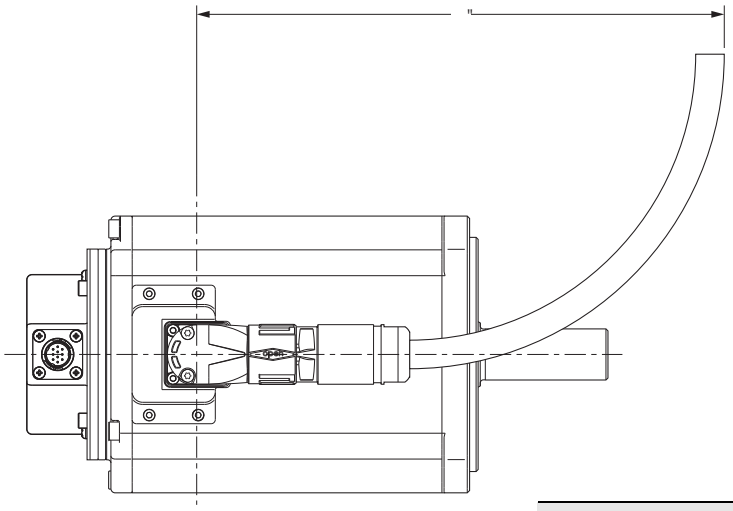

Model	A (mm)
R88M-1L4K030T(-S2/-O/-OS2/-B/-BS2/-BO/-BOS2)	265
R88M-1L4K030C(-S2/-O/-OS2/-B/-BS2/-BO/-BOS2)	
R88M-1L5K030T(-S2/-O/-OS2/-B/-BS2/-BO/-BOS2) (Available soon)	---
R88M-1L5K030C(-S2/-O/-OS2/-B/-BS2/-BO/-BOS2)	265
R88M-1M4K015T(-S2/-O/-OS2/-B/-BS2/-BO/-BOS2) (Available soon)	---
R88M-1M4K015C(-S2/-O/-OS2/-B/-BS2/-BO/-BOS2)	265
R88M-1M5K515T(-S2/-O/-OS2/-B/-BS2/-BO/-BOS2) (Available soon)	---
R88M-1M5K515C(-S2/-O/-OS2/-B/-BS2/-BO/-BOS2)	265
R88M-1M7K515C(-S2/-O/-OS2/-B/-BS2/-BO/-BOS2)	

Servo Motor for Connector Type M40

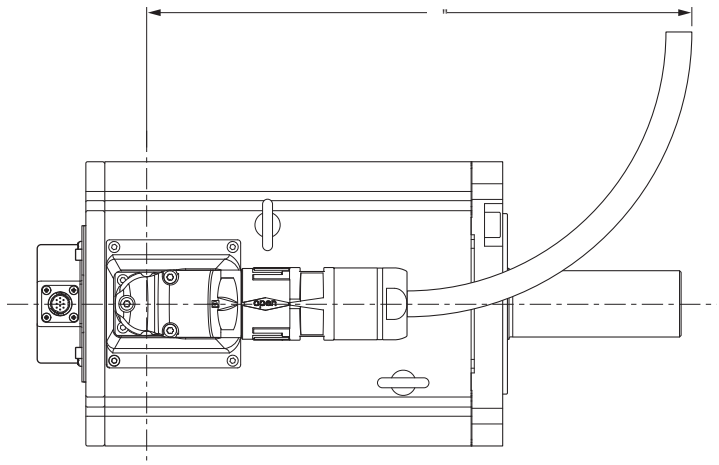

Model
R88M-1M7K515T (-S2/-O/-OS2/-B/-BS2/-BO/-BOS2)
R88M-1M11K015T (-S2/-O/-OS2/-B/-BS2/-BO/-BOS2)
R88M-1M11K015C (-S2/-O/-OS2/-B/-BS2/-BO/-BOS2)
R88M-1M15K015T (-S2/-O/-OS2/-B/-BS2/-BO/-BOS2)
R88M-1M15K015C (-S2/-O/-OS2/-B/-BS2/-BO/-BOS2)

Ordering Information

Interpreting Model Numbers 65
AC Servo Drives with Built-in EtherCAT Communications 65
AC Servomotor 65
Decelerator 91
Table of AC Servomotor Variations 66
Ordering Information 67
AC Servo Drives with Built-in EtherCAT Communications 67
AC Servomotors 68
Decelerator (Backlash: 3 Arcminutes Max./15 Arcminutes Max.) 99
Cables and Peripheral Devices 73
Software 85
Combination table 86
Related Manuals 87
Sizing Tool for AC Servo Motors 88

Interpreting Model Numbers

AC Servo Drives with Built-in EtherCAT Communications

R88D-1S N 01 H -ECT
(1) (2) (3) (4) (5)

No	Item	Symbol	Specifications
(1)	1S-series Servo Drive		
(2)	Servo Drive Type	N	Standard / Communication type
(3)	Applicable Servomotor rated output	01	100 W
		02	200 W
		04	400 W
		06	600 W
		08	750 W
		10	1 kW
		15	1.5 kW
		20	2 kW
		30	3 kW
		55	5.5 kW
		75	7.5 kW
		150	15 kW
(4)	Power Supply Voltage	L	100 VAC
		H	200 VAC
		F	400 VAC
(5)	Communications type	ECT	EtherCAT Communications

AC Servomotor

R88M-1 M 100 30 S -BOS2
(1) (2) (3) (4) (5) (6)

No	Item	Symbol	Specifications
(1)	1S-series Servomotor		
(2)	Servomotor Type	L	Standard / Low-inertia type
		M	Standard / Middle-inertia type
(3)	Rated output	050	50 W
		100	100 W
		200	200 W
		400	400 W
		600	600 W
		750	750 W
		900	900 W
		1K0	1 kW
		1K5	1.5 kW
		2K0	2 kW
		3K0	3 kW
		4K0	4 kW
		5K0	5 kW
		5K5	5.5 kW
		7K0	7.5 kW
		11K0	11 kW
		15K0	15 kW
(4)	Rated rotation speed	10	1,000 r/min
		15	1,500 r/min
		20	2,000 r/min
		30	3,000 r/min
(5)	Servo Drive main power supply voltage and encoder type	S	100 VAC absolute encoder
		T	200 VAC absolute encoder
		C	400 VAC absolute encoder
(6)	Options		
	Brake	None	Without brake
		B	With 24-VDC brake
	Oil seal	None	Without oil seal
		O	With oil seal
	Key and tap	None	Straight shaft
		S2	With key and tap

Note: R88M-1L5K030T (-□), R88M-1M4K015T (-□) and R88M-1M5K515T (-□) will be available soon.

Table of AC Servomotor Variations

R88M-1□ □□□ □□ □ - □ □ □□
(2) (3) (4) (5) (6) (7) (8)

(2)	(3)	(4)	Model	(5)			(6)		(7)		(8)	
Type	Rated output	Rotation speed		Power supply specifications			Brake		Oil seal		Shaft type	
				ABS 400	ABS 200	ABS 100						
				C	T	S	None	B	None	O	None	S2
M	50 W	3,000 r/min	R88M-1M05030		✓	✓	✓	✓	✓	✓	✓	✓
	100 W		R88M-1M10030		✓	✓	✓	✓	✓	✓	✓	✓
	200 W		R88M-1M20030		✓	✓	✓	✓	✓	✓	✓	✓
	400 W		R88M-1M40030		✓	✓	✓	✓	✓	✓	✓	✓
	750 W		R88M-1M75030		✓		✓	✓	✓	✓	✓	✓
L	750 W		R88M-1L75030	✓			✓	✓	✓	✓	✓	✓
	1 kW		R88M-1L1K030	✓	✓		✓	✓	✓	✓	✓	✓
	1.5 kW		R88M-1L1K530	✓	✓		✓	✓	✓	✓	✓	✓
	2 kW		R88M-1L2K030	✓	✓		✓	✓	✓	✓	✓	✓
	3 kW		R88M-1L3K030	✓	✓		✓	✓	✓	✓	✓	✓
	4 kW		R88M-1L4K030	✓	✓		✓	✓	✓	✓	✓	✓
	5 kW		R88M-1L5K030	✓	✓*		✓	✓	✓	✓	✓	✓
M	400 W	2,000 r/min	R88M-1M40020	✓			✓	✓	✓	✓	✓	✓
	600 W		R88M-1M60020	✓			✓	✓	✓	✓	✓	✓
	1 kW		R88M-1M1K020	✓	✓		✓	✓	✓	✓	✓	✓
	1.5 kW		R88M-1M1K520	✓	✓		✓	✓	✓	✓	✓	✓
	2 kW		R88M-1M2K020	✓	✓		✓	✓	✓	✓	✓	✓
	3 kW		R88M-1M3K020	✓	✓		✓	✓	✓	✓	✓	✓
M	4 kW	1,500 r/min	R88M-1M4K015	✓	✓*		✓	✓	✓	✓	✓	✓
	5.5 kW		R88M-1M5K515	✓	✓*		✓	✓	✓	✓	✓	✓
	7.5 kW		R88M-1M7K515	✓	✓		✓	✓	✓	✓	✓	✓
	11 kW		R88M-1M11K015	✓	✓		✓	✓	✓	✓	✓	✓
	15 kW		R88M-1M15K015	✓	✓		✓	✓	✓	✓	✓	✓
M	900 W	1,000 r/min	R88M-1M90010	✓	✓		✓	✓	✓	✓	✓	✓
	2 kW		R88M-1M2K010	✓	✓		✓	✓	✓	✓	✓	✓
	3 kW		R88M-1M3K010	✓	✓		✓	✓	✓	✓	✓	✓
M:Middle inertia L:Low inertia	100: 100 W 1K0: 1 kW 3K0: 3 kW	10: 1,000 r/min 15: 1,500 r/min 20: 2,000 r/min 30: 3,000 r/min		C: 400 VAC (with absolute encoder) ABS/INC T: 200 VAC (with absolute encoder) ABS/INC S: 100 VAC (with absolute encoder) ABS/INC			None: Without brake B: With 24-VDC brake		None: Without oil seal O: With oil seal		None: Straight shaft S2: With key and tap	

* Available soon.

Ordering Information

AC Servo Drives with Built-in EtherCAT Communications

Power supply voltage	Rated output	Model
Single-phase 100 VAC	100 W	R88D-1SN01L-ECT
	200 W	R88D-1SN02L-ECT
	400 W	R88D-1SN04L-ECT
Single-phase/3-phase 200 VAC	100 W	R88D-1SN01H-ECT
	200 W	R88D-1SN02H-ECT
	400 W	R88D-1SN04H-ECT
	750 W	R88D-1SN08H-ECT
	1.5 kW	R88D-1SN15H-ECT
3-phase 200 VAC	1 kW	R88D-1SN10H-ECT
	2 kW	R88D-1SN20H-ECT
	3 kW	R88D-1SN30H-ECT
	5.5 kW	R88D-1SN55H-ECT
	7.5 kW	R88D-1SN75H-ECT
	15 kW	R88D-1SN150H-ECT
3-phase 400 VAC	600 W	R88D-1SN06F-ECT
	1 kW	R88D-1SN10F-ECT
	1.5 kW	R88D-1SN15F-ECT
	2 kW	R88D-1SN20F-ECT
	3 kW	R88D-1SN30F-ECT
	5.5 kW	R88D-1SN55F-ECT
	7.5 kW	R88D-1SN75F-ECT
	15 kW	R88D-1SN150F-ECT

AC Servomotors

● 3,000-r/min Servomotors

Specifications			Model	
			Without oil seal	
			Straight shaft	With key and tap
Without brake	100 VAC	50 W	R88M-1M05030S	R88M-1M05030S-S2
		100 W	R88M-1M10030S	R88M-1M10030S-S2
		200 W	R88M-1M20030S	R88M-1M20030S-S2
		400 W	R88M-1M40030S	R88M-1M40030S-S2
	200 VAC	50 W	R88M-1M05030T	R88M-1M05030T-S2
		100 W	R88M-1M10030T	R88M-1M10030T-S2
		200 W	R88M-1M20030T	R88M-1M20030T-S2
		400 W	R88M-1M40030T	R88M-1M40030T-S2
		750 W	R88M-1M75030T	R88M-1M75030T-S2
		1 kW	R88M-1L1K030T	R88M-1L1K030T-S2
		1.5 kW	R88M-1L1K530T	R88M-1L1K530T-S2
		2 kW	R88M-1L2K030T	R88M-1L2K030T-S2
		3 kW	R88M-1L3K030T	R88M-1L3K030T-S2
		4 kW	R88M-1L4K030T	R88M-1L4K030T-S2
		5 kW	R88M-1L5K030T Available soon	R88M-1L5K030T-S2 Available soon
	400 VAC	750 W	R88M-1L75030C	R88M-1L75030C-S2
		1 kW	R88M-1L1K030C	R88M-1L1K030C-S2
		1.5 kW	R88M-1L1K530C	R88M-1L1K530C-S2
		2 kW	R88M-1L2K030C	R88M-1L2K030C-S2
		3 kW	R88M-1L3K030C	R88M-1L3K030C-S2
		4 kW	R88M-1L4K030C	R88M-1L4K030C-S2
		5 kW	R88M-1L5K030C	R88M-1L5K030C-S2
With brake	100 VAC	50 W	R88M-1M05030S-B	R88M-1M05030S-BS2
		100 W	R88M-1M10030S-B	R88M-1M10030S-BS2
		200 W	R88M-1M20030S-B	R88M-1M20030S-BS2
		400 W	R88M-1M40030S-B	R88M-1M40030S-BS2
	200 VAC	50 W	R88M-1M05030T-B	R88M-1M05030T-BS2
		100 W	R88M-1M10030T-B	R88M-1M10030T-BS2
		200 W	R88M-1M20030T-B	R88M-1M20030T-BS2
		400 W	R88M-1M40030T-B	R88M-1M40030T-BS2
		750 W	R88M-1M75030T-B	R88M-1M75030T-BS2
		1 kW	R88M-1L1K030T-B	R88M-1L1K030T-BS2
		1.5 kW	R88M-1L1K530T-B	R88M-1L1K530T-BS2
		2 kW	R88M-1L2K030T-B	R88M-1L2K030T-BS2
		3 kW	R88M-1L3K030T-B	R88M-1L3K030T-BS2
		4 kW	R88M-1L4K030T-B	R88M-1L4K030T-BS2
		5 kW	R88M-1L5K030T-B Available soon	R88M-1L5K030T-BS2 Available soon
	400 VAC	750 W	R88M-1L75030C-B	R88M-1L75030C-BS2
		1 kW	R88M-1L1K030C-B	R88M-1L1K030C-BS2
		1.5 kW	R88M-1L1K530C-B	R88M-1L1K530C-BS2
		2 kW	R88M-1L2K030C-B	R88M-1L2K030C-BS2
		3 kW	R88M-1L3K030C-B	R88M-1L3K030C-BS2
		4 kW	R88M-1L4K030C-B	R88M-1L4K030C-BS2
		5 kW	R88M-1L5K030C-B	R88M-1L5K030C-BS2

Specifications			Model	
			With oil seal	
			Straight shaft	With key and tap
Without brake	100 VAC	50 W	R88M-1M05030S-O	R88M-1M05030S-OS2
		100 W	R88M-1M10030S-O	R88M-1M10030S-OS2
		200 W	R88M-1M20030S-O	R88M-1M20030S-OS2
		400 W	R88M-1M40030S-O	R88M-1M40030S-OS2
	200 VAC	50 W	R88M-1M05030T-O	R88M-1M05030T-OS2
		100 W	R88M-1M10030T-O	R88M-1M10030T-OS2
		200 W	R88M-1M20030T-O	R88M-1M20030T-OS2
		400 W	R88M-1M40030T-O	R88M-1M40030T-OS2
		750 W	R88M-1M75030T-O	R88M-1M75030T-OS2
		1 kW	R88M-1L1K030T-O	R88M-1L1K030T-OS2
		1.5 kW	R88M-1L1K530T-O	R88M-1L1K530T-OS2
		2 kW	R88M-1L2K030T-O	R88M-1L2K030T-OS2
		3 kW	R88M-1L3K030T-O	R88M-1L3K030T-OS2
		4 kW	R88M-1L4K030T-O	R88M-1L4K030T-OS2
		5 kW	R88M-1L5K030T-O Available soon	R88M-1L5K030T-OS2 Available soon
	400 VAC	750 W	R88M-1L75030C-O	R88M-1L75030C-OS2
		1 kW	R88M-1L1K030C-O	R88M-1L1K030C-OS2
		1.5 kW	R88M-1L1K530C-O	R88M-1L1K530C-OS2
		2 kW	R88M-1L2K030C-O	R88M-1L2K030C-OS2
		3 kW	R88M-1L3K030C-O	R88M-1L3K030C-OS2
		4 kW	R88M-1L4K030C-O	R88M-1L4K030C-OS2
		5 kW	R88M-1L5K030C-O	R88M-1L5K030C-OS2
With brake	100 VAC	50 W	R88M-1M05030S-BO	R88M-1M05030S-BOS2
		100 W	R88M-1M10030S-BO	R88M-1M10030S-BOS2
		200 W	R88M-1M20030S-BO	R88M-1M20030S-BOS2
		400 W	R88M-1M40030S-BO	R88M-1M40030S-BOS2
	200 VAC	50 W	R88M-1M05030T-BO	R88M-1M05030T-BOS2
		100 W	R88M-1M10030T-BO	R88M-1M10030T-BOS2
		200W	R88M-1M20030T-BO	R88M-1M20030T-BOS2
		400 W	R88M-1M40030T-BO	R88M-1M40030T-BOS2
		750 W	R88M-1M75030T-BO	R88M-1M75030T-BOS2
		1 kW	R88M-1L1K030T-BO	R88M-1L1K030T-BOS2
		1.5 kW	R88M-1L1K530T-BO	R88M-1L1K530T-BOS2
		2 kW	R88M-1L2K030T-BO	R88M-1L2K030T-BOS2
		3 kW	R88M-1L3K030T-BO	R88M-1L3K030T-BOS2
		4 kW	R88M-1L4K030T-BO	R88M-1L4K030T-BOS2
		5 kW	R88M-1L5K030T-BO Available soon	R88M-1L5K030T-BOS2 Available soon
	400 VAC	750 W	R88M-1L75030C-BO	R88M-1L75030C-BOS2
		1 kW	R88M-1L1K030C-BO	R88M-1L1K030C-BOS2
		1.5 kW	R88M-1L1K530C-BO	R88M-1L1K530C-BOS2
		2 kW	R88M-1L2K030C-BO	R88M-1L2K030C-BOS2
		3 kW	R88M-1L3K030C-BO	R88M-1L3K030C-BOS2
		4 kW	R88M-1L4K030C-BO	R88M-1L4K030C-BOS2
		5 kW	R88M-1L5K030C-BO	R88M-1L5K030C-BOS2

● 2,000-r/min Servomotors

Specifications			Model	
			Without oil seal	
			Straight shaft	With key and tap
Without brake	200 VAC	1 kW	R88M-1M1K020T	R88M-1M1K020T-S2
		1.5 kW	R88M-1M1K520T	R88M-1M1K520T-S2
		2 kW	R88M-1M2K020T	R88M-1M2K020T-S2
		3 kW	R88M-1M3K020T	R88M-1M3K020T-S2
	400 VAC	400 W	R88M-1M40020C	R88M-1M40020C-S2
		600 W	R88M-1M60020C	R88M-1M60020C-S2
		1 kW	R88M-1M1K020C	R88M-1M1K020C-S2
		1.5 kW	R88M-1M1K520C	R88M-1M1K520C-S2
		2 kW	R88M-1M2K020C	R88M-1M2K020C-S2
		3 kW	R88M-1M3K020C	R88M-1M3K020C-S2
With brake	200 VAC	1 kW	R88M-1M1K020T-B	R88M-1M1K020T-BS2
		1.5 kW	R88M-1M1K520T-B	R88M-1M1K520T-BS2
		2 kW	R88M-1M2K020T-B	R88M-1M2K020T-BS2
		3 kW	R88M-1M3K020T-B	R88M-1M3K020T-BS2
	400 VAC	400 W	R88M-1M40020C-B	R88M-1M40020C-BS2
		600 W	R88M-1M60020C-B	R88M-1M60020C-BS2
		1 kW	R88M-1M1K020C-B	R88M-1M1K020C-BS2
		1.5 kW	R88M-1M1K520C-B	R88M-1M1K520C-BS2
		2 kW	R88M-1M2K020C-B	R88M-1M2K020C-BS2
		3 kW	R88M-1M3K020C-B	R88M-1M3K020C-BS2

Specifications			Model	
			With oil seal	
			Straight shaft	With key and tap
Without brake	200 VAC	1 kW	R88M-1M1K020T-O	R88M-1M1K020T-OS2
		1.5 kW	R88M-1M1K520T-O	R88M-1M1K520T-OS2
		2 kW	R88M-1M2K020T-O	R88M-1M2K020T-OS2
		3 kW	R88M-1M3K020T-O	R88M-1M3K020T-OS2
	400 VAC	400 W	R88M-1M40020C-O	R88M-1M40020C-OS2
		600 W	R88M-1M60020C-O	R88M-1M60020C-OS2
		1 kW	R88M-1M1K020C-O	R88M-1M1K020C-OS2
		1.5 kW	R88M-1M1K520C-O	R88M-1M1K520C-OS2
		2 kW	R88M-1M2K020C-O	R88M-1M2K020C-OS2
		3 kW	R88M-1M3K020C-O	R88M-1M3K020C-OS2
With brake	200 VAC	1 kW	R88M-1M1K020T-BO	R88M-1M1K020T-BOS2
		1.5 kW	R88M-1M1K520T-BO	R88M-1M1K520T-BOS2
		2 kW	R88M-1M2K020T-BO	R88M-1M2K020T-BOS2
		3 kW	R88M-1M3K020T-BO	R88M-1M3K020T-BOS2
	400 VAC	400 W	R88M-1M40020C-BO	R88M-1M40020C-BOS2
		600 W	R88M-1M60020C-BO	R88M-1M60020C-BOS2
		1 kW	R88M-1M1K020C-BO	R88M-1M1K020C-BOS2
		1.5 kW	R88M-1M1K520C-BO	R88M-1M1K520C-BOS2
		2 kW	R88M-1M2K020C-BO	R88M-1M2K020C-BOS2
		3 kW	R88M-1M3K020C-BO	R88M-1M3K020C-BOS2

● 1500-r/min Servomotors

Specifications			Model			
			Without oil seal			
			Straight shaft		With key and tap	
Without brake	200 VAC	4 kW	R88M-1M4K015T	Available soon	R88M-1M4K015T-S2	Available soon
		5.5 kW	R88M-1M5K515T	Available soon	R88M-1M5K515T-S2	Available soon
		7.5 kW	R88M-1M7K515T		R88M-1M7K515T-S2	
		11 kW	R88M-1M11K015T		R88M-1M11K015T-S2	
		15 kW	R88M-1M15K015T		R88M-1M15K015T-S2	
	AC400V	4 kW	R88M-1M4K015C		R88M-1M4K015C-S2	
		5.5 kW	R88M-1M5K515C		R88M-1M5K515C-S2	
		7.5 kW	R88M-1M7K515C		R88M-1M7K515C-S2	
		11 kW	R88M-1M11K015C		R88M-1M11K015C-S2	
		15 kW	R88M-1M15K015C		R88M-1M15K015C-S2	
With brake	200 VAC	4 kW	R88M-1M4K015T-B	Available soon	R88M-1M4K015T-BS2	Available soon
		5.5 kW	R88M-1M5K515T-B	Available soon	R88M-1M5K515T-BS2	Available soon
		7.5 kW	R88M-1M7K515T-B		R88M-1M7K515T-BS2	
		11 kW	R88M-1M11K015T-B		R88M-1M11K015T-BS2	
		15 kW	R88M-1M15K015T-B		R88M-1M15K015T-BS2	
	AC400V	4 kW	R88M-1M4K015C-B		R88M-1M4K015C-BS2	
		5.5 kW	R88M-1M5K515C-B		R88M-1M5K515C-BS2	
		7.5 kW	R88M-1M7K515C-B		R88M-1M7K515C-BS2	
		11 kW	R88M-1M11K015C-B		R88M-1M11K015C-BS2	
		15 kW	R88M-1M15K015C-B		R88M-1M15K015C-BS2	

Specifications			Model			
			With oil seal			
			Straight shaft		With key and tap	
Without brake	200 VAC	4 kW	R88M-1M4K015T-O	Available soon	R88M-1M4K015T-OS2	Available soon
		5.5 kW	R88M-1M5K515T-O	Available soon	R88M-1M5K515T-OS2	Available soon
		7.5 kW	R88M-1M7K515T-O		R88M-1M7K515T-OS2	
		11 kW	R88M-1M11K015T-O		R88M-1M11K015T-OS2	
		15 kW	R88M-1M15K015T-O		R88M-1M15K015T-OS2	
	AC400V	4 kW	R88M-1M4K015C-O		R88M-1M4K015C-OS2	
		5.5 kW	R88M-1M5K515C-O		R88M-1M5K515C-OS2	
		7.5 kW	R88M-1M7K515C-O		R88M-1M7K515C-OS2	
		11 kW	R88M-1M11K015C-O		R88M-1M11K015C-OS2	
		15 kW	R88M-1M15K015C-O		R88M-1M15K015C-OS2	
With brake	200 VAC	4 kW	R88M-1M4K015T-BO	Available soon	R88M-1M4K015T-BOS2	Available soon
		5.5 kW	R88M-1M5K515T-BO	Available soon	R88M-1M5K515T-BOS2	Available soon
		7.5 kW	R88M-1M7K515T-BO		R88M-1M7K515T-BOS2	
		11 kW	R88M-1M11K015T-BO		R88M-1M11K015T-BOS2	
		15 kW	R88M-1M15K015T-BO		R88M-1M15K015T-BOS2	
	AC400V	4 kW	R88M-1M4K015C-BO		R88M-1M4K015C-BOS2	
		5.5 kW	R88M-1M5K515C-BO		R88M-1M5K515C-BOS2	
		7.5 kW	R88M-1M7K515C-BO		R88M-1M7K515C-BOS2	
		11 kW	R88M-1M11K015C-BO		R88M-1M11K015C-BOS2	
		15 kW	R88M-1M15K015C-BO		R88M-1M15K015C-BOS2	

● 1,000-r/min Servomotors

Specifications			Model	
			Without oil seal	
			Straight shaft	With key and tap
Without brake	200 VAC	900 W	R88M-1M90010T	R88M-1M90010T-S2
		2 kW	R88M-1M2K010T	R88M-1M2K010T-S2
		3 kW	R88M-1M3K010T	R88M-1M3K010T-S2
	400 VAC	900 W	R88M-1M90010C	R88M-1M90010C-S2
		2 kW	R88M-1M2K010C	R88M-1M2K010C-S2
		3 kW	R88M-1M3K010C	R88M-1M3K010C-S2
With brake	200 VAC	900 W	R88M-1M90010T-B	R88M-1M90010T-BS2
		2 kW	R88M-1M2K010T-B	R88M-1M2K010T-BS2
		3 kW	R88M-1M3K010T-B	R88M-1M3K010T-BS2
	400 VAC	900 W	R88M-1M90010C-B	R88M-1M90010C-BS2
		2 kW	R88M-1M2K010C-B	R88M-1M2K010C-BS2
		3 kW	R88M-1M3K010C-B	R88M-1M3K010C-BS2

Specifications			Model	
			With oil seal	
			Straight shaft	With key and tap
Without brake	200 VAC	900 W	R88M-1M90010T-O	R88M-1M90010T-OS2
		2 kW	R88M-1M2K010T-O	R88M-1M2K010T-OS2
		3 kW	R88M-1M3K010T-O	R88M-1M3K010T-OS2
	400 VAC	900 W	R88M-1M90010C-O	R88M-1M90010C-OS2
		2 kW	R88M-1M2K010C-O	R88M-1M2K010C-OS2
		3 kW	R88M-1M3K010C-O	R88M-1M3K010C-OS2
With brake	200 VAC	900 W	R88M-1M90010T-BO	R88M-1M90010T-BOS2
		2 kW	R88M-1M2K010T-BO	R88M-1M2K010T-BOS2
		3 kW	R88M-1M3K010T-BO	R88M-1M3K010T-BOS2
	400 VAC	900 W	R88M-1M90010C-BO	R88M-1M90010C-BOS2
		2 kW	R88M-1M2K010C-BO	R88M-1M2K010C-BOS2
		3 kW	R88M-1M3K010C-BO	R88M-1M3K010C-BOS2

Cables and Peripheral Devices

Encoder Cables (Flexible Cable)

Applicable Servomotor			Model
100 V 200 V	3,000-r/min Servomotors of 50W, 100 W, 200 W, 400 W, and 750 W	1 m	R88A-CR1A001CFR-A
		3 m	R88A-CR1A003CFR-A
		5 m	R88A-CR1A005CFR-A
		10 m	R88A-CR1A010CFR-A
		15 m	R88A-CR1A015CFR-A
		20 m	R88A-CR1A020CFR-A
		25 m	R88A-CR1A025CFR-A
		30 m	R88A-CR1A030CFR-A
		35 m	R88A-CR1A035CFR-A
		40 m	R88A-CR1A040CFR-A
		50 m	R88A-CR1A050CFR-A
200 V 400 V	200 V: 3000-r/min Servomotors of 1 to 3 kW 2000-r/min Servomotors 1000-r/min Servomotors 400 V: 3000-r/min Servomotors of 3 kW or less 2000-r/min Servomotors 1000-r/min Servomotors	1 m	R88A-CR1B001NFS-A
		3 m	R88A-CR1B003NFS-A
		5 m	R88A-CR1B005NFS-A
		10 m	R88A-CR1B010NFS-A
		15 m	R88A-CR1B015NFS-A
		20 m	R88A-CR1B020NFS-A
		25 m	R88A-CR1B025NFS-A
		30 m	R88A-CR1B030NFS-A
		35 m	R88A-CR1B035NFS-A
		40 m	R88A-CR1B040NFS-A
		50 m	R88A-CR1B050NFS-A
200 V 400 V	3000-r/min Servomotors of 4 kW or more 1500-r/min Servomotors	3 m	R88A-CR1B003VF-A
		5 m	R88A-CR1B005VF-A
		10 m	R88A-CR1B010VF-A
		15 m	R88A-CR1B015VF-A
		20 m	R88A-CR1B020VF-A
		25 m	R88A-CR1B025VF-A
		30 m	R88A-CR1B030VF-A
		40 m	R88A-CR1B040VF-A
		50 m	R88A-CR1B050VF-A

Encoder Cables (Bulkhead Cable, Flexible Cable)

Applicable Servomotor			Bulk-Head Ext Cable
200 V 400 V	200 V: 3000-r/min Servomotors of 1 to 3 kW 2000-r/min Servomotors 1000-r/min Servomotors 400 V: 3000-r/min Servomotors of 3 kW or less 2000-r/min Servomotors 1000-r/min Servomotors	1 m	R88A-BR1B01NFS-A
		2 m	R88A-BR1B02NFS-A
		3 m	R88A-BR1B03NFS-A
		4 m	R88A-BR1B04NFS-A
		5 m	R88A-BR1B05NFS-A
		10 m	R88A-BR1B10NFS-A
		15 m	R88A-BR1B15NFS-A
		20 m	R88A-BR1B20NFS-A
		25 m	R88A-BR1B25NFS-A
		30 m	R88A-BR1B30NFS-A
		35 m	R88A-BR1B35NFS-A
		40 m	R88A-BR1B40NFS-A
		50 m	R88A-BR1B50NFS-A

Encoder Cables (Extension Cable, Flexible Cable)

Applicable Servomotor			Straight Ext Cable
200 V 400 V	200 V: 3000-r/min Servomotors of 1 to 3 kW 2000-r/min Servomotors 1000-r/min Servomotors 400 V: 3000-r/min Servomotors of 3 kW or less 2000-r/min Servomotors 1000-r/min Servomotors	1 m	R88A-ER1B01NFS-A
		2 m	R88A-ER1B02NFS-A
		3 m	R88A-ER1B03NFS-A
		4 m	R88A-ER1B04NFS-A
		5 m	R88A-ER1B05NFS-A
		10 m	R88A-ER1B10NFS-A
		15 m	R88A-ER1B15NFS-A
		20 m	R88A-ER1B20NFS-A
		25 m	R88A-ER1B25NFS-A
		30 m	R88A-ER1B30NFS-A
		35 m	R88A-ER1B35NFS-A
		40 m	R88A-ER1B40NFS-A
		50 m	R88A-ER1B50NFS-A

Brake Cables (Flexible Cable)

Applicable Servomotor			Model
100 V 200 V	3,000-r/min Servomotors of 100 W, 200 W, 400 W, and 750 W *	1 m	R88A-CA1A001BFR-A
		3 m	R88A-CA1A003BFR-A
		5 m	R88A-CA1A005BFR-A
		10 m	R88A-CA1A010BFR-A
		15 m	R88A-CA1A015BFR-A
		20 m	R88A-CA1A020BFR-A
		25 m	R88A-CA1A025BFR-A
		30 m	R88A-CA1A030BFR-A
		35 m	R88A-CA1A035BFR-A
		40 m	R88A-CA1A040BFR-A
		50 m	R88A-CA1A050BFR-A

* The Servomotors of 50 W are exempt from the applicable Servomotors. Use these combinations with caution.

Power Cables (Flexible Cable)

Applicable Servomotor			Model	Model with Brake
100 V 200 V	3,000-r/min Servomotors of 100 W, 200 W, 400 W, and 750 W *	1 m	R88A-CA1A001SFR-A	*The Servomotors of 50W are exempt from the applicable Servomotors. Use these combinations with caution.
		3 m	R88A-CA1A003SFR-A	
		5 m	R88A-CA1A005SFR-A	
		10 m	R88A-CA1A010SFR-A	
		15 m	R88A-CA1A015SFR-A	
		20 m	R88A-CA1A020SFR-A	
		25 m	R88A-CA1A025SFR-A	
		30 m	R88A-CA1A030SFR-A	
		35 m	R88A-CA1A035SFR-A	
		40 m	R88A-CA1A040SFR-A	
		50 m	R88A-CA1A050SFR-A	
200 V	3,000-r/min Servomotors of 1 kW 2,000-r/min Servomotors of 1 kW 1,000-r/min Servomotors of 900 W 3,000-r/min Servomotors of 1.5 kW 2,000-r/min Servomotors of 1.5 kW	1 m	R88A-CA1C001SFS-A	R88A-CA1C001BFS-A
		3 m	R88A-CA1C003SFS-A	R88A-CA1C003BFS-A
		5 m	R88A-CA1C005SFS-A	R88A-CA1C005BFS-A
		10 m	R88A-CA1C010SFS-A	R88A-CA1C010BFS-A
		15 m	R88A-CA1C015SFS-A	R88A-CA1C015BFS-A
		20 m	R88A-CA1C020SFS-A	R88A-CA1C020BFS-A
		25 m	R88A-CA1C025SFS-A	R88A-CA1C025BFS-A
		30 m	R88A-CA1C030SFS-A	R88A-CA1C030BFS-A
		35 m	R88A-CA1C035SFS-A	R88A-CA1C035BFS-A
		40 m	R88A-CA1C040SFS-A	R88A-CA1C040BFS-A
		50 m	R88A-CA1C050SFS-A	R88A-CA1C050BFS-A
400 V	3,000-r/min Servomotors of 750 W, 1 kW, 1.5 kW, and 2 kW 2,000-r/min Servomotors of 400 W, 600 W, 1 kW, 1.5 kW, and 2 kW 1,000-r/min Servomotors of 900 W	1 m	R88A-CA1C001SFS-A	R88A-CA1E001BFS-A
		3 m	R88A-CA1C003SFS-A	R88A-CA1E003BFS-A
		5 m	R88A-CA1C005SFS-A	R88A-CA1E005BFS-A
		10 m	R88A-CA1C010SFS-A	R88A-CA1E010BFS-A
		15 m	R88A-CA1C015SFS-A	R88A-CA1E015BFS-A
		20 m	R88A-CA1C020SFS-A	R88A-CA1E020BFS-A
		25 m	R88A-CA1C025SFS-A	R88A-CA1E025BFS-A
		30 m	R88A-CA1C030SFS-A	R88A-CA1E030BFS-A
		35 m	R88A-CA1C035SFS-A	R88A-CA1E035BFS-A
		40 m	R88A-CA1C040SFS-A	R88A-CA1E040BFS-A
		50 m	R88A-CA1C050SFS-A	R88A-CA1E050BFS-A
200V 400V	3,000-r/min Servomotors of 2 kW (200 V) and 3 kW (200 V/400 V) 2,000-r/min Servomotors of 2 kW (200 V) and 3 kW (200 V/400 V) 1,000-r/min Servomotors of 2 kW (200 V/400 V) and 3 kW (400 V)	1 m	R88A-CA1E001SFS-A	R88A-CA1E001BFS-A
		3 m	R88A-CA1E003SFS-A	R88A-CA1E003BFS-A
		5 m	R88A-CA1E005SFS-A	R88A-CA1E005BFS-A
		10 m	R88A-CA1E010SFS-A	R88A-CA1E010BFS-A
		15 m	R88A-CA1E015SFS-A	R88A-CA1E015BFS-A
		20 m	R88A-CA1E020SFS-A	R88A-CA1E020BFS-A
		25 m	R88A-CA1E025SFS-A	R88A-CA1E025BFS-A
		30 m	R88A-CA1E030SFS-A	R88A-CA1E030BFS-A
		35 m	R88A-CA1E035SFS-A	R88A-CA1E035BFS-A
		40 m	R88A-CA1E040SFS-A	R88A-CA1E040BFS-A
		50 m	R88A-CA1E050SFS-A	R88A-CA1E050BFS-A
200 V 400 V	1,000-r/min Servomotors of 3 kW (200V)	1 m	R88A-CA1F001SF-A	R88A-CA1F001BF-A
		3 m	R88A-CA1F003SF-A	R88A-CA1F003BF-A
		5 m	R88A-CA1F005SF-A	R88A-CA1F005BF-A
		10 m	R88A-CA1F010SF-A	R88A-CA1F010BF-A
		15 m	R88A-CA1F015SF-A	R88A-CA1F015BF-A
		20 m	R88A-CA1F020SF-A	R88A-CA1F020BF-A
		25 m	R88A-CA1F025SF-A	R88A-CA1F025BF-A
		30 m	R88A-CA1F030SF-A	R88A-CA1F030BF-A
		35 m	R88A-CA1F035SF-A	R88A-CA1F035BF-A
		40 m	R88A-CA1F040SF-A	R88A-CA1F040BF-A
		50 m	R88A-CA1F050SF-A	R88A-CA1F050BF-A

Applicable Servomotor			Model	Model with Brake
200V 400V	200 V: 3000 r/min Servomotors of 4 kW 400 V: 3000 r/min Servomotors of 4 kW, 5 kW 1500 r/min Servomotors of 4 kW, 5.5 kW, 7.5 kW	3 m	R88A-CA1H003SF-A	R88A-CA1H003BF-A
		5 m	R88A-CA1H005SF-A	R88A-CA1H005BF-A
		10 m	R88A-CA1H010SF-A	R88A-CA1H010BF-A
		15 m	R88A-CA1H015SF-A	R88A-CA1H015BF-A
		20 m	R88A-CA1H020SF-A	R88A-CA1H020BF-A
		25 m	R88A-CA1H025SF-A	R88A-CA1H025BF-A
		30 m	R88A-CA1H030SF-A	R88A-CA1H030BF-A
		40 m	R88A-CA1H040SF-A	R88A-CA1H040BF-A
		50 m	R88A-CA1H050SF-A	R88A-CA1H050BF-A
400V	1500 r/min Servomotors of 11 kW, 15 kW	3 m	R88A-CA1J003SF-A	R88A-CA1J003BF-A
		5 m	R88A-CA1J005SF-A	R88A-CA1J005BF-A
		10 m	R88A-CA1J010SF-A	R88A-CA1J010BF-A
		15 m	R88A-CA1J015SF-A	R88A-CA1J015BF-A
		20 m	R88A-CA1J020SF-A	R88A-CA1J020BF-A
		25 m	R88A-CA1J025SF-A	R88A-CA1J025BF-A
		30 m	R88A-CA1J030SF-A	R88A-CA1J030BF-A
		40 m	R88A-CA1J040SF-A	R88A-CA1J040BF-A
		50 m	R88A-CA1J050SF-A	R88A-CA1J050BF-A
200V	1500 r/min Servomotors of 7.5 kW, 11 kW, 15 kW	3 m	R88A-CA1K003SF-A	R88A-CA1K003BF-A
		5 m	R88A-CA1K005SF-A	R88A-CA1K005BF-A
		10 m	R88A-CA1K010SF-A	R88A-CA1K010BF-A
		15 m	R88A-CA1K015SF-A	R88A-CA1K015BF-A
		20 m	R88A-CA1K020SF-A	R88A-CA1K020BF-A
		25 m	R88A-CA1K025SF-A	R88A-CA1K025BF-A
		30 m	R88A-CA1K030SF-A	R88A-CA1K030BF-A
		40 m	R88A-CA1K040SF-A	R88A-CA1K040BF-A
		50 m	R88A-CA1K050SF-A	R88A-CA1K050BF-A

* The Servomotors of 50 W are exempt from the applicable Servomotors. Use these combinations with caution.

Power Cables (Right Angle, Flexible Cable)

Applicable Servomotor			Model	Model with Brake
200 V	3,000-r/min Servomotors of 1 kW 2,000-r/min Servomotors of 1 kW 1,000-r/min Servomotors of 900 W 3,000-r/min Servomotors of 1.5 kW 2,000-r/min Servomotors of 1.5 kW	1 m	R88A-CA1C01SFR-A	R88A-CA1C01BFR-A
		3 m	R88A-CA1C03SFR-A	R88A-CA1C03BFR-A
		5 m	R88A-CA1C05SFR-A	R88A-CA1C05BFR-A
		10 m	R88A-CA1C10SFR-A	R88A-CA1C10BFR-A
		15 m	R88A-CA1C15SFR-A	R88A-CA1C15BFR-A
		20 m	R88A-CA1C20SFR-A	R88A-CA1C20BFR-A
		25 m	R88A-CA1C25SFR-A	R88A-CA1C25BFR-A
		30 m	R88A-CA1C30SFR-A	R88A-CA1C30BFR-A
		35 m	R88A-CA1C35SFR-A	R88A-CA1C35BFR-A
		40 m	R88A-CA1C40SFR-A	R88A-CA1C40BFR-A
		50 m	R88A-CA1C50SFR-A	R88A-CA1C50BFR-A
400 V	3,000-r/min Servomotors of 750 W, 1 kW, 1.5 kW, and 2 kW 2,000-r/min Servomotors of 400 W, 600 W, 1 kW, 1.5 kW, and 2 kW 1,000-r/min Servomotors of 900 W	1 m	R88A-CA1C01SFR-A	R88A-CA1E01BFR-A
		3 m	R88A-CA1C03SFR-A	R88A-CA1E03BFR-A
		5 m	R88A-CA1C05SFR-A	R88A-CA1E05BFR-A
		10 m	R88A-CA1C10SFR-A	R88A-CA1E10BFR-A
		15 m	R88A-CA1C15SFR-A	R88A-CA1E15BFR-A
		20 m	R88A-CA1C20SFR-A	R88A-CA1E20BFR-A
		25 m	R88A-CA1C25SFR-A	R88A-CA1E25BFR-A
		30 m	R88A-CA1C30SFR-A	R88A-CA1E30BFR-A
		35 m	R88A-CA1C35SFR-A	R88A-CA1E35BFR-A
		40 m	R88A-CA1C40SFR-A	R88A-CA1E40BFR-A
		50 m	R88A-CA1C50SFR-A	R88A-CA1E50BFR-A
200 V 400 V	3,000-r/min Servomotors of 2 kW (200 V) and 3 kW (200 V/400 V) 2,000-r/min Servomotors of 2 kW (200 V) and 3 kW (200 V/400 V) 1,000-r/min Servomotors of 2 kW (200 V/400 V) and 3 kW (400 V)	1 m	R88A-CA1E01BFR-A	R88A-CA1E01BFR-A
		3 m	R88A-CA1E03BFR-A	R88A-CA1E03BFR-A
		5 m	R88A-CA1E05BFR-A	R88A-CA1E05BFR-A
		10 m	R88A-CA1E10BFR-A	R88A-CA1E10BFR-A
		15 m	R88A-CA1E15BFR-A	R88A-CA1E15BFR-A
		20 m	R88A-CA1E20BFR-A	R88A-CA1E20BFR-A
		25 m	R88A-CA1E25BFR-A	R88A-CA1E25BFR-A
		30 m	R88A-CA1E30BFR-A	R88A-CA1E30BFR-A
		35 m	R88A-CA1E35BFR-A	R88A-CA1E35BFR-A
		40 m	R88A-CA1E40BFR-A	R88A-CA1E40BFR-A
		50 m	R88A-CA1E50BFR-A	R88A-CA1E50BFR-A
200 V	1,000-r/min Servomotors of 3 kW (200V)	1 m	R88A-CA1F01BFR-A	R88A-CA1F01BFR-A
		3 m	R88A-CA1F03BFR-A	R88A-CA1F03BFR-A
		5 m	R88A-CA1F05BFR-A	R88A-CA1F05BFR-A
		10 m	R88A-CA1F10BFR-A	R88A-CA1F10BFR-A
		15 m	R88A-CA1F15BFR-A	R88A-CA1F15BFR-A
		20 m	R88A-CA1F20BFR-A	R88A-CA1F20BFR-A
		25 m	R88A-CA1F25BFR-A	R88A-CA1F15BFR-A
		30 m	R88A-CA1F30BFR-A	R88A-CA1F30BFR-A
		35 m	R88A-CA1F35BFR-A	R88A-CA1F35BFR-A
		40 m	R88A-CA1F40BFR-A	R88A-CA1F40BFR-A
		50 m	R88A-CA1F50BFR-A	R88A-CA1F50BFR-A

Power Cables (Extension Cable, Flexible Cable)

Applicable Servomotor			Model	Model with Brake
200 V	3,000-r/min Servomotors of 1 kW 2,000-r/min Servomotors of 1 kW 1,000-r/min Servomotors of 900 W 3,000-r/min Servomotors of 1.5 kW 2,000-r/min Servomotors of 1.5 kW	1 m	R88A-EA1C01SFS-A	R88A-EA1C01BFS-A
		2 m	R88A-EA1C02SFS-A	R88A-EA1C02BFS-A
		3 m	R88A-EA1C03SFS-A	R88A-EA1C03BFS-A
		4 m	R88A-EA1C04SFS-A	R88A-EA1C04BFS-A
		5 m	R88A-EA1C05SFS-A	R88A-EA1C05BFS-A
		10 m	R88A-EA1C10SFS-A	R88A-EA1C10BFS-A
		15 m	R88A-EA1C15SFS-A	R88A-EA1C15BFS-A
		20 m	R88A-EA1C20SFS-A	R88A-EA1C20BFS-A
		25 m	R88A-EA1C25SFS-A	R88A-EA1C25BFS-A
		30 m	R88A-EA1C30SFS-A	R88A-EA1C30BFS-A
		35 m	R88A-EA1C35SFS-A	R88A-EA1C35BFS-A
		40 m	R88A-EA1C40SFS-A	R88A-EA1C40BFS-A
		50 m	R88A-EA1C50SFS-A	R88A-EA1C50BFS-A
400 V	3,000-r/min Servomotors of 750 W, 1 kW, 1.5 kW, and 2 kW 2,000-r/min Servomotors of 400 W, 600 W, 1 kW, 1.5 kW, and 2 kW 1,000-r/min Servomotors of 900 W	1 m	R88A-EA1C01SFS-A	R88A-EA1E01BFS-A
		2 m	R88A-EA1C02SFS-A	R88A-EA1E02BFS-A
		3 m	R88A-EA1C03SFS-A	R88A-EA1E03BFS-A
		4 m	R88A-EA1C04SFS-A	R88A-EA1E04BFS-A
		5 m	R88A-EA1C05SFS-A	R88A-EA1E05BFS-A
		10 m	R88A-EA1C10SFS-A	R88A-EA1E10BFS-A
		15 m	R88A-EA1C15SFS-A	R88A-EA1E15BFS-A
		20 m	R88A-EA1C20SFS-A	R88A-EA1E20BFS-A
		25 m	R88A-EA1C25SFS-A	R88A-EA1E25BFS-A
		30 m	R88A-EA1C30SFS-A	R88A-EA1E30BFS-A
		35 m	R88A-EA1C35SFS-A	R88A-EA1E35BFS-A
		40 m	R88A-EA1C40SFS-A	R88A-EA1E40BFS-A
		50 m	R88A-EA1C50SFS-A	R88A-EA1E50BFS-A
200V 400V	3,000-r/min Servomotors of 2 kW (200 V) and 3 kW (200 V/400 V) 2,000-r/min Servomotors of 2 kW (200 V) and 3 kW (200 V/400 V) 1,000-r/min Servomotors of 2 kW (200 V/400 V) and 3 kW (400 V)	1 m	R88A-EA1E01SFS-A	R88A-EA1E01BFS-A
		2 m	R88A-EA1E02SFS-A	R88A-EA1E02BFS-A
		3 m	R88A-EA1E03SFS-A	R88A-EA1E03BFS-A
		4 m	R88A-EA1E04SFS-A	R88A-EA1E04BFS-A
		5 m	R88A-EA1E05SFS-A	R88A-EA1E05BFS-A
		10 m	R88A-EA1E10SFS-A	R88A-EA1E10BFS-A
		15 m	R88A-EA1E15SFS-A	R88A-EA1E15BFS-A
		20 m	R88A-EA1E20SFS-A	R88A-EA1E20BFS-A
		25 m	R88A-EA1E25SFS-A	R88A-EA1E25BFS-A
		30 m	R88A-EA1E30SFS-A	R88A-EA1E30BFS-A
		35 m	R88A-EA1E35SFS-A	R88A-EA1E35BFS-A
		40 m	R88A-EA1E40SFS-A	R88A-EA1E40BFS-A
		50 m	R88A-EA1E50SFS-A	R88A-EA1E50BFS-A
200 V	1,000-r/min Servomotors of 3 kW (200V)	1 m	R88A-EA1F01SFS-A	R88A-EA1F01BFSA
		2 m	R88A-EA1F02SFS-A	R88A-EA1F02BFSA
		3 m	R88A-EA1F03SFS-A	R88A-EA1F03BFSA
		4 m	R88A-EA1F04SFS-A	R88A-EA1F04BFSA
		5 m	R88A-EA1F05SFS-A	R88A-EA1F05BFSA
		10 m	R88A-EA1F10SFS-A	R88A-EA1F10BFSA
		15 m	R88A-EA1F15SFS-A	R88A-EA1F15BFSA
		20 m	R88A-EA1F20SFS-A	R88A-EA1F20BFSA
		25 m	R88A-EA1F25SFS-A	R88A-EA1F25BFSA
		30 m	R88A-EA1F30SFS-A	R88A-EA1F30BFSA
		35 m	R88A-EA1F35SFS-A	R88A-EA1F35BFSA
		40 m	R88A-EA1F40SFS-A	R88A-EA1F40BFSA
		50 m	R88A-EA1F50SFS-A	R88A-EA1F50BFSA

Power Cables (Extension Cable, Right Angle, Flexible Cable)

Applicable Servomotor			Model	Model with Brake
200 V	3,000-r/min Servomotors of 1 kW 2,000-r/min Servomotors of 1 kW 1,000-r/min Servomotors of 900 W 3,000-r/min Servomotors of 1.5 kW 2,000-r/min Servomotors of 1.5 kW	1 m	R88A-EA1C01SFR-A	R88A-EA1C01BFR-A
		2 m	R88A-EA1C02SFR-A	R88A-EA1C02BFR-A
		3 m	R88A-EA1C03SFR-A	R88A-EA1C03BFR-A
		4 m	R88A-EA1C04SFR-A	R88A-EA1C04BFR-A
		5 m	R88A-EA1C05SFR-A	R88A-EA1C05BFR-A
		10 m	R88A-EA1C10SFR-A	R88A-EA1C10BFR-A
		15 m	R88A-EA1C15SFR-A	R88A-EA1C15BFR-A
		20 m	R88A-EA1C20SFR-A	R88A-EA1C20BFR-A
		25 m	R88A-EA1C25SFR-A	R88A-EA1C25BFR-A
		30 m	R88A-EA1C30SFR-A	R88A-EA1C30BFR-A
		35 m	R88A-EA1C35SFR-A	R88A-EA1C35BFR-A
		40 m	R88A-EA1C40SFR-A	R88A-EA1C40BFR-A
		50 m	R88A-EA1C50SFR-A	R88A-EA1C50BFR-A
400 V	3,000-r/min Servomotors of 750 W, 1 kW, 1.5 kW, and 2 kW 2,000-r/min Servomotors of 400 W, 600 W, 1 kW, 1.5 kW, and 2 kW 1,000-r/min Servomotors of 900 W	1 m	R88A-EA1C01SFR-A	R88A-EA1E01BFR-A
		2 m	R88A-EA1C02SFR-A	R88A-EA1E02BFR-A
		3 m	R88A-EA1C03SFR-A	R88A-EA1E03BFR-A
		4 m	R88A-EA1C04SFR-A	R88A-EA1E04BFR-A
		5 m	R88A-EA1C05SFR-A	R88A-EA1E05BFR-A
		10 m	R88A-EA1C10SFR-A	R88A-EA1E10BFR-A
		15 m	R88A-EA1C15SFR-A	R88A-EA1E15BFR-A
		20 m	R88A-EA1C20SFR-A	R88A-EA1E20BFR-A
		25 m	R88A-EA1C25SFR-A	R88A-EA1E25BFR-A
		30 m	R88A-EA1C30SFR-A	R88A-EA1E30BFR-A
		35 m	R88A-EA1C35SFR-A	R88A-EA1E35BFR-A
		40 m	R88A-EA1C40SFR-A	R88A-EA1E40BFR-A
		50 m	R88A-EA1C50SFR-A	R88A-EA1E50BFR-A
200V 400V	3,000-r/min Servomotors of 2 kW (200 V) and 3 kW (200 V/400 V) 2,000-r/min Servomotors of 2 kW (200 V) and 3 kW (200 V/400 V) 1,000-r/min Servomotors of 2 kW (200 V/400 V) and 3 kW (400 V)	1 m	R88A-EA1E01SFR-A	R88A-EA1E01BFR-A
		2 m	R88A-EA1E02SFR-A	R88A-EA1E02BFR-A
		3 m	R88A-EA1E03SFR-A	R88A-EA1E03BFR-A
		4 m	R88A-EA1E04SFR-A	R88A-EA1E04BFR-A
		5 m	R88A-EA1E05SFR-A	R88A-EA1E05BFR-A
		10 m	R88A-EA1E10SFR-A	R88A-EA1E10BFR-A
		15 m	R88A-EA1E15SFR-A	R88A-EA1E15BFR-A
		20 m	R88A-EA1E20SFR-A	R88A-EA1E20BFR-A
		25 m	R88A-EA1E25SFR-A	R88A-EA1E25BFR-A
		30 m	R88A-EA1E30SFR-A	R88A-EA1E30BFR-A
		35 m	R88A-EA1E35SFR-A	R88A-EA1E35BFR-A
		40 m	R88A-EA1E40SFR-A	R88A-EA1E40BFR-A
		50 m	R88A-EA1E50SFR-A	R88A-EA1E50BFR-A
200 V	1,000-r/min Servomotors of 3 kW (200V)	1 m	R88A-EA1F01SFR-A	R88A-EA1F01BFR-A
		2 m	R88A-EA1F02SFR-A	R88A-EA1F02BFR-A
		3 m	R88A-EA1F03SFR-A	R88A-EA1F03BFR-A
		4 m	R88A-EA1F04SFR-A	R88A-EA1F04BFR-A
		5 m	R88A-EA1F05SFR-A	R88A-EA1F05BFR-A
		10 m	R88A-EA1F10SFR-A	R88A-EA1F10BFR-A
		15 m	R88A-EA1F15SFR-A	R88A-EA1F15BFR-A
		20 m	R88A-EA1F20SFR-A	R88A-EA1F20BFR-A
		25 m	R88A-EA1F25SFR-A	R88A-EA1F25BFR-A
		30 m	R88A-EA1F30SFR-A	R88A-EA1F30BFR-A
		35 m	R88A-EA1F35SFR-A	R88A-EA1F35BFR-A
		40 m	R88A-EA1F40SFR-A	R88A-EA1F40BFR-A
		50 m	R88A-EA1F50SFR-A	R88A-EA1F50BFR-A

Power Cables (Bulkhead Cable, Flexible Cable)

Applicable Servomotor			Model	Model with Brake
200 V	3,000-r/min Servomotors of 1 kW 2,000-r/min Servomotors of 1 kW 1,000-r/min Servomotors of 900 W 3,000-r/min Servomotors of 1.5 kW 2,000-r/min Servomotors of 1.5 kW	1 m	R88A-BA1C01SFS-A	R88A-BA1C01BFS-A
		2 m	R88A-BA1C02SFS-A	R88A-BA1C02BFS-A
		3 m	R88A-BA1C03SFS-A	R88A-BA1C03BFS-A
		4 m	R88A-BA1C04SFS-A	R88A-BA1C04BFS-A
		5 m	R88A-BA1C05SFS-A	R88A-BA1C05BFS-A
		10 m	R88A-BA1C10SFS-A	R88A-BA1C10BFS-A
		15 m	R88A-BA1C15SFS-A	R88A-BA1C15BFS-A
		20 m	R88A-BA1C20SFS-A	R88A-BA1C20BFS-A
		25 m	R88A-BA1C25SFS-A	R88A-BA1C25BFS-A
		30 m	R88A-BA1C30SFS-A	R88A-BA1C30BFS-A
		35 m	R88A-BA1C35SFS-A	R88A-BA1C35BFS-A
		40 m	R88A-BA1C40SFS-A	R88A-BA1C40BFS-A
		50 m	R88A-BA1C50SFS-A	R88A-BA1C50BFS-A
400 V	3,000-r/min Servomotors of 750 W, 1 kW, 1.5 kW, and 2 kW 2,000-r/min Servomotors of 400 W, 600 W, 1 kW, 1.5 kW, and 2 kW 1,000-r/min Servomotors of 900 W	1 m	R88A-BA1C01SFS-A	R88A-BA1E01BFS-A
		2 m	R88A-BA1C02SFS-A	R88A-BA1E02BFS-A
		3 m	R88A-BA1C03SFS-A	R88A-BA1E03BFS-A
		4 m	R88A-BA1C04SFS-A	R88A-BA1E04BFS-A
		5 m	R88A-BA1C05SFS-A	R88A-BA1E05BFS-A
		10 m	R88A-BA1C10SFS-A	R88A-BA1E10BFS-A
		15 m	R88A-BA1C15SFS-A	R88A-BA1E15BFS-A
		20 m	R88A-BA1C20SFS-A	R88A-BA1E20BFS-A
		25 m	R88A-BA1C25SFS-A	R88A-BA1E25BFS-A
		30 m	R88A-BA1C30SFS-A	R88A-BA1E30BFS-A
		35 m	R88A-BA1C35SFS-A	R88A-BA1E35BFS-A
		40 m	R88A-BA1C40SFS-A	R88A-BA1E40BFS-A
		50 m	R88A-BA1C50SFS-A	R88A-BA1E50BFS-A
200V 400V	3,000-r/min Servomotors of 2 kW (200 V) and 3 kW (200 V/400 V) 2,000-r/min Servomotors of 2 kW (200 V) and 3 kW (200 V/400 V) 1,000-r/min Servomotors of 2 kW (200 V/400 V) and 3 kW (400 V)	1 m	R88A-BA1E01SFS-A	R88A-BA1E01BFS-A
		2 m	R88A-BA1E02SFS-A	R88A-BA1E02BFS-A
		3 m	R88A-BA1E03SFS-A	R88A-BA1E03BFS-A
		4 m	R88A-BA1E04SFS-A	R88A-BA1E04BFS-A
		5 m	R88A-BA1E05SFS-A	R88A-BA1E05BFS-A
		10 m	R88A-BA1E10SFS-A	R88A-BA1E10BFS-A
		15 m	R88A-BA1E15SFS-A	R88A-BA1E15BFS-A
		20 m	R88A-BA1E20SFS-A	R88A-BA1E20BFS-A
		25 m	R88A-BA1E25SFS-A	R88A-BA1E25BFS-A
		30 m	R88A-BA1E30SFS-A	R88A-BA1E30BFS-A
		35 m	R88A-BA1E35SFS-A	R88A-BA1E35BFS-A
		40 m	R88A-BA1E40SFS-A	R88A-BA1E40BFS-A
		50 m	R88A-BA1E50SFS-A	R88A-BA1E50BFS-A
200 V	1,000-r/min Servomotors of 3 kW (200V)	1 m	R88A-BA1F01SFS-A	R88A-BA1F01BFS-A
		2 m	R88A-BA1F02SFS-A	R88A-BA1F02BFS-A
		3 m	R88A-BA1F03SFS-A	R88A-BA1F03BFS-A
		4 m	R88A-BA1F04SFS-A	R88A-BA1F04BFS-A
		5 m	R88A-BA1F05SFS-A	R88A-BA1F05BFS-A
		10 m	R88A-BA1F10SFS-A	R88A-BA1F10BFS-A
		15 m	R88A-BA1F15SFS-A	R88A-BA1F15BFS-A
		20 m	R88A-BA1F20SFS-A	R88A-BA1F20BFS-A
		25 m	R88A-BA1F25SFS-A	R88A-BA1F25BFS-A
		30 m	R88A-BA1F30SFS-A	R88A-BA1F30BFS-A
		35 m	R88A-BA1F35SFS-A	R88A-BA1F35BFS-A
		40 m	R88A-BA1F40SFS-A	R88A-BA1F40BFS-A
		50 m	R88A-BA1F50SFS-A	R88A-BA1F50BFS-A

Extension Power Cables (Flexible Cable)

Use the cables listed below to extend the motor power cable either with or without brake wire for a servomotor of 4 kW or more.

Applicable Servomotor			Model
200V 400V	200 V: 3000 r/min Servomotors of 4 kW 400 V: 3000 r/min Servomotors of 4 kW, 5 kW 1500 r/min Servomotors of 4 kW, 5.5 kW, 7.5 kW	10 m	R88A-CA1HE10BF-A
		20 m	R88A-CA1HE20BF-A
400V	1500r/min Servomotors of 11kW, 15kW	10 m	R88A-CA1JE10BF-A
		20 m	R88A-CA1JE20BF-A
200V	1500r/min Servomotors of 7.5kW, 11kW, 15kW	10 m	R88A-CA1KE10BF-A
		20 m	R88A-CA1KE20BF-A

Brake Cables (Non-load side, Flexible Cable)

When you use the brake cable with cable on non-load side such as R88A-CA1A□□□BFR, use it in combination with the motor power cable with cable on non-load side such as R88A-CA1A□□□SFR.

Applicable Servomotor			Model
100 V 200 V	3000-r/min Servomotors of 50 W, 200 W, 400 W, 750 W *	3 m	R88A-CA1A003BFR
		5 m	R88A-CA1A005BFR
		10 m	R88A-CA1A010BFR
		15 m	R88A-CA1A015BFR
		20 m	R88A-CA1A020BFR

* The Servomotors of 100 W are exempt from the applicable Servomotors. Use these combinations with caution.

Motor Power Cables (Non-load side, Flexible Cable)

When you use the motor power cable with cable on non-load side such as R88A-CA1A□□□SFR and the brake cable together, use the brake cable with cable on non-load side such as R88A-CA1A□□□BFR.

Applicable Servomotor			Model
100 V 200 V	3000-r/min Servomotors of 50 W, 200 W, 400 W, 750 W *	3 m	R88A-CA1A003SFR
		5 m	R88A-CA1A005SFR
		10 m	R88A-CA1A010SFR
		15 m	R88A-CA1A015SFR
		20 m	R88A-CA1A020SFR

* The Servomotors of 100 W are exempt from the applicable Servomotors. Use these combinations with caution.

Recommended EtherCAT Communications Cable

Use a straight STP (shielded twisted-pair) cable of category 5 or higher with double shielding (braiding and aluminum foil tape) for EtherCAT.

Cabel with Connectors

Item	Appearance	Recommended manufacturer	Cable length [m]	Model
Cable with Connectors on Both Ends (RJ45/RJ45) Standard RJ45 plugs type *1 Wire gauge and number of pairs: AWG26, 4-pair cable Cable sheath material: LSZH *2 Cable color: Yellow *3		OMRON	0.3	XS6W-6LSZH8SS30CM-Y
			0.5	XS6W-6LSZH8SS50CM-Y
			1	XS6W-6LSZH8SS100CM-Y
			2	XS6W-6LSZH8SS200CM-Y
			3	XS6W-6LSZH8SS300CM-Y
			5	XS6W-6LSZH8SS500CM-Y
Cable with Connectors on Both Ends (RJ45/RJ45) Rugged RJ45 plugs type *1 Wire gauge and number of pairs: AWG22, 2-pair cable Cable color: Light blue		OMRON	0.3	XS5W-T421-AMD-K
			0.5	XS5W-T421-BMD-K
			1	XS5W-T421-CMD-K
			2	XS5W-T421-DMD-K
			5	XS5W-T421-GMD-K
			10	XS5W-T421-JMD-K
Cable with Connectors on Both Ends (M12 Straight/M12 Straight) Shield Strengthening Connector cable *4 M12/Smartclick Connectors Wire Gauge and Number of Pairs: AWG22, 2-pair cable Cable color: Black		OMRON	0.5	XS5W-T421-BM2-SS
			1	XS5W-T421-CM2-SS
			2	XS5W-T421-DM2-SS
			3	XS5W-T421-EM2-SS
			5	XS5W-T421-GM2-SS
			10	XS5W-T421-JM2-SS
Cable with Connectors on Both Ends (M12 Straight/RJ45) Shield Strengthening Connector cable *4 M12/Smartclick Connectors Rugged RJ45 plugs type Wire Gauge and Number of Pairs: AWG22, 2-pair cable Cable color: Black		OMRON	0.5	XS5W-T421-BMC-SS
			1	XS5W-T421-CMC-SS
			2	XS5W-T421-DMC-SS
			3	XS5W-T421-EMC-SS
			5	XS5W-T421-GMC-SS
			10	XS5W-T421-JMC-SS

*1. Standard type cables length 0.2, 0.3, 0.5, 1, 1.5, 2, 3, 5, 7.5, 10, 15 and 20 m are available.
Rugged type cables length 0.3, 0.5, 1, 2, 3, 5, 10 and 15 m are available.
For details, refer to Cat.No.G019.
*2. The lineup features Low Smoke Zero Halogen cables for in-cabinet use and PUR cables for out-of-cabinet use. Although the LSZH cable is single shielded, its communications and noise characteristics meet the standards.
*3. Cables colors are available in blue, yellow, or Green.
*4. For details, contact your OMRON representative.

Cables/Connectors
Wire Gauge and Number of Pairs: AWG24, 4-pair Cable

Item	Appearance	Recommended manufacturer	Model
Cables	---	Hitachi Metals, Ltd.	NETSTAR-C5E SAB 0.5 × 4P CP *
	---	Kuramo Electric Co.	KETH-SB *
	---	SWCC Showa Cable Systems Co.	FAE-5004 *
RJ45 Connectors	---	Panduit Corporation	MPS588-C *

* We recommend you to use above cable and connector together.

Wire Gauge and Number of Pairs: AWG22, 2-pair Cable

Item	Appearance	Recommended manufacturer	Model
Cables	---	Kuramo Electric Co.	KETH-PSB-OMR *
	---	JMACS Japan Co., Ltd.	PNET/B *
RJ45 Assembly Connector		OMRON	XS6G-T421-1 *

* We recommend you to use above cable and connector together.

Peripheral Connector

Servo Drive Side Connectors

One of each of servo drive side connectors (except the encoder connector) are included with the R88D-1SN□-ECT AC Servo Drive.
All connecters are also available separately for maintenance.

Name and applications	Model
Main circuit connector (CNA) *1 For R88D-1SN01L-ECT/-1SN02L-ECT/-1SN04L-ECT/-1SN01H-ECT/-1SN02H-ECT/-1SN04H-ECT/-1SN08H-ECT/-1SN10H-ECT	R88A-CN102P *4
Main circuit connector A (CNA) *2 For R88D-1SN15H-ECT/-1SN20H-ECT/-1SN30H-ECT/-1SN06F-ECT/-1SN10F-ECT/-1SN15F-ECT/-1SN20F-ECT/-1SN30F-ECT	R88A-CN103P *4
Main circuit connector A (CNA) *2 For R88D-1SN55H-ECT/-1SN75H-ECT/-1SN55F-ECT/-1SN75F-ECT	R88A-CN106P
Main circuit connector A (CNA) For R88D-1SN150F-ECT	R88A-CN108P
Main circuit connector B (CNB) *2 For R88D-1SN15H-ECT/-1SN20H-ECT/-1SN30H-ECT/-1SN06F-ECT/-1SN10F-ECT/-1SN15F-ECT/-1SN20F-ECT/-1SN30F-ECT	R88A-CN104P *4
Main circuit connector B (CNB) *2 For R88D-1SN55H-ECT/-1SN75H-ECT/-1SN55F-ECT/-1SN75F-ECT	R88A-CN107P
Main circuit connector B (CNB) For R88D-1SN150H-ECT/-1SN150F-ECT	R88A-CN101E
Motor connector (CNC) For R88D-1SN01L-ECT/-1SN02L-ECT/-1SN04L-ECT/-1SN01H-ECT/-1SN02H-ECT/-1SN04H-ECT/-1SN08H-ECT/-1SN10H-ECT	R88A-CN101A *4
Motor connector (CNC) For R88D-1SN15H-ECT/-1SN20H-ECT/-1SN30H-ECT/-1SN06F-ECT/-1SN10F-ECT/-1SN15F-ECT/-1SN20F-ECT/-1SN30F-ECT	R88A-CN102A *4
Motor connector (CNC) For R88D-1SN55H-ECT/-1SN75H-ECT/-1SN55F-ECT/-1SN75F-ECT/-1SN150F-ECT	R88A-CN103A
Control power supply connector (CND) For R88D-1SN15H-ECT/-1SN20H-ECT/-1SN30H-ECT/-1SN06F-ECT/-1SN10F-ECT/-1SN15F-ECT/-1SN20F-ECT/-1SN30F-ECT	R88A-CN101P *4
Control power supply connector (CND) For R88D-1SN55H-ECT/-1SN75H-ECT/-1SN150H-ECT/-1SN55F-ECT/-1SN75F-ECT/-1SN150F-ECT	R88A-CN105P
Main circuit connector E (CNE) *2 For R88D-1SN55H-ECT/-1SN75H-ECT/-1SN150H-ECT/-1SN55F-ECT/-1SN75F-ECT/-1SN150F-ECT	R88A-CN101D
Control I/O connector (CN1) *3	R88A-CN101C
Encoder connector (CN2)	R88A-CN101R
Brake interlock connector (CN12)	R88A-CN101B

*1. Two short-circuit wires are connected to the connector.
*2. One short-circuit wire is connected to the connector.
*3. Four short-circuit wires are connected to the connector.
*4. One opener is included.

Servomotor Side Connector

Applicable Servo Drive and Power Cables			Model
Encoder connector	100 V, 200 V	For 3,000 r/min (50 to 750 W)	R88A-CNK02R
	200 V	For 3000 r/min (1 kW to 3 kW), 2000 r/min, 1000 r/min	R88A-CN104R
	400 V	For 3000 r/min (750 kW to 3 kW), 2000 r/min, 1000 r/min	
	200 V, 400 V	For 3000 r/min (4 kW to 5 kW), 1500 r/min	R88A-CN105R
Power connector (For 750 W max.) *			R88A-CN111A
Brake connector (For 750 W max.)			R88A-CN111B

* This connector is used for power cables with cable on load side such as R88A-CA1A□□□S and R88A-CA1A□SF. This connector cannot be used for power cables with cable on non-load side such as R88A-CA1A□SFR.

External Regeneration Resistance Unit Connector

Name and applications	Model
External Regeneration Resistance Unit Connector For R88A-RR550□	R88A-CN101E *

* Same connector as main circuit connector B (CNB) for R88D-1SN150H-ECT/-1SN150F-ECT.

Shield Clamp Bracket

A shield clamp is used for fixing a power cable and connecting a shield wire of the power cable with FG in Servo Drives.
The shield clamp consists of the shield clamp bracket and shield clamp plate.

Name	Applicable Servo Drive and Power Cables		Model
Shield Clamp Bracket	R88D-1SN55□-ECT R88D-1SN75F-ECT	R88A-CA1H□□□□F	R88A-SC10CA
	R88D-1SN150F-ECT	R88A-CA1J□□□□F	
	R88D-1SN75H-ECT R88D-1SN150H-ECT	R88A-CA1K□□□□F	

Note: An applicable power cable comes with a shield clamp bracket.
An extension cable does not come with a shield clamp bracket.

External Regeneration Resistors

Applicable Servo Drive	Specifications	Model
R88D-1SN01L-ECT/-1SN02L-ECT	Regeneration process capacity: 24 W, 15 Ω	R88A-RR12015
R88D-1SN01H-ECT/-1SN02H-ECT	Regeneration process capacity: 24 W, 25 Ω	R88A-RR12025
R88D-1SN150H-ECT	Regeneration process capacity: 60 W, 2.5 Ω	R88A-RR30002R5
R88D-1SN75H-ECT	Regeneration process capacity: 60 W, 4 Ω	R88A-RR30004
R88D-1SN55H-ECT	Regeneration process capacity: 60 W, 5.4 Ω	R88A-RR30005R4
R88D-1SN20H-ECT/-1SN30H-ECT/-1SN150F-ECT	Regeneration process capacity: 60 W, 10 Ω	R88A-RR30010
R88D-1SN04L-ECT	Regeneration process capacity: 60 W, 12 Ω	R88A-RR30012
R88D-1SN01L-ECT/-1SN02L-ECT	Regeneration process capacity: 60 W, 15 Ω	R88A-RR30015
R88D-1SN55F-ECT/-1SN75F-ECT	Regeneration process capacity: 60 W, 16 Ω	R88A-RR30016
R88D-1SN15H-ECT	Regeneration process capacity: 60 W, 17 Ω	R88A-RR30017
R88D-1SN08H-ECT/-1SN10H-ECT/-1SN20F-ECT */ -1SN30F-ECT *	Regeneration process capacity: 60 W, 20 Ω	R88A-RR30020
R88D-1SN01H-ECT/-1SN02H-ECT/-1SN04H-ECT	Regeneration process capacity: 60 W, 25 Ω	R88A-RR30025
R88D-1SN06F-ECT */-1SN10F-ECT */-1SN15F-ECT *	Regeneration process capacity: 60 W, 33 Ω	R88A-RR30033

* Use two series-connected External Regeneration Resistors for this model.

External Regeneration Resistance Unit

Applicable Servo Drive	Specifications	Model
R88D-1SN150H-ECT	Regeneration process capacity: 120 W, 2.5 Ω	R88A-RR55002R5
R88D-1SN75H-ECT	Regeneration process capacity: 120W, 4 Ω	R88A-RR55004
R88D-1SN55H-ECT	Regeneration process capacity: 120W, 5.4 Ω	R88A-RR55005R4
R88D-1SN150F-ECT	Regeneration process capacity: 120W, 10 Ω	R88A-RR55010
R88D-1SN55F-ECT/-1SN75F-ECT	Regeneration process capacity: 120W, 16 Ω	R88A-RR55016
R88D-1SN150H-ECT	Regeneration process capacity: 640W, 2.5 Ω (with fan)	R88A-RR1K602R5
R88D-1SN75H-ECT	Regeneration process capacity: 640W, 4 Ω (with fan)	R88A-RR1K604
R88D-1SN55H-ECT	Regeneration process capacity: 640W, 5.4 Ω (with fan)	R88A-RR1K605R4
R88D-1SN20H-ECT/-1SN30H-ECT	Regeneration process capacity: 640 W, 10 Ω (with fan)	R88A-RR1K610
R88D-1SN55F-ECT/-1SN75F-ECT/-1SN150F-ECT	Regeneration process capacity: 640 W, 16 Ω (with fan)	R88A-RR1K616
R88D-1SN15H-ECT	Regeneration process capacity: 640 W, 17 Ω (with fan)	R88A-RR1K617
R88D-1SN08H-ECT/-1SN10H-ECT/-1SN20F-ECT */ -1SN30F-ECT */-1SN55F-ECT *	Regeneration process capacity: 640 W, 20 Ω (with fan)	R88A-RR1K620
R88D-1SN20F-ECT/-1SN30F-ECT	Regeneration process capacity: 640 W, 40 Ω (with fan)	R88A-RR1K640
R88D-1SN06F-ECT/-1SN10F-ECT/-1SN15F-ECT	Regeneration process capacity: 640 W, 66 Ω (with fan)	R88A-RR1K666

* Use two series-connected External Regeneration Resistance Units for this model.

External Dynamic Brake Resistors

Applicable Servomotor	Specifications	Model
R88D-1SN150H-ECT	Resistance value: 1.25 Ω	R88A-DBR30001R2
R88D-1SN55H-ECT/-1SN75H-ECT	Resistance value: 1.5 Ω	R88A-DBR30001R5
R88D-1SN55F-ECT/-1SN75F-ECT	Resistance value: 4 Ω	R88A-DBR30004
R88D-1SN150F-ECT	Resistance value: 5 Ω	R88A-DBR30005

DC Reactor

For a recommended reactor for applicable Servomotor at 5.5 kW or more, refer to the *AC Servomotors/Servo Drives 1S-series with Built-in EtherCAT® Communications User's Manual* (Cat. No. I586).

Applicable Servomotor	Model
R88D-1SN01L-ECT/-1SN01H-ECT/-1SN02H-ECT	R88A-PD2002
R88D-1SN02L-ECT/-1SN04H-ECT	R88A-PD2004
R88D-1SN04L-ECT/-1SN08H-ECT	R88A-PD2007
R88D-1SN10H-ECT/-1SN15H-ECT	R88A-PD2015
R88D-1SN20H-ECT	R88A-PD2022
R88D-1SN30H-ECT	R88A-PD2037
R88D-1SN06F-ECT	R88A-PD4007
R88D-1SN10F-ECT/-1SN15F-ECT	R88A-PD4015
R88D-1SN20F-ECT	R88A-PD4022
R88D-1SN30F-ECT	R88A-PD4037

Footprint-type Noise Filter

For a recommended noise filter for applicable Servomotor at 5.5 kW or more, refer to the *AC Servomotors/Servo Drives 1S-series with Built-in EtherCAT® Communications User's Manual* (Cat. No. I586).

Applicable Servo Drive	Model
R88D-1SN01L-ECT/-1SN01H-ECT/-1SN02H-ECT (Single-phase input)	R88A-FI1S103
R88D-1SN02L-ECT/-1SN04H-ECT (Single-phase input)	R88A-FI1S105
R88D-1SN04L-ECT/-1SN08H-ECT (Single-phase input)	R88A-FI1S109
R88D-1SN15H-ECT (Single-phase input)	R88A-FI1S116
R88D-1SN01H-ECT/-1SN02H-ECT (3-phase input)	R88A-FI1S202
	R88A-FI1S203
R88D-1SN04H-ECT (3-phase input)	R88A-FI1S203
R88D-1SN08H-ECT (3-phase input)/-1SN10H-ECT	R88A-FI1S208
R88D-1SN15H-ECT (3-phase input)/-1SN20H-ECT/-1SN30H-ECT	R88A-FI1S216
R88D-1SN06F-ECT/-1SN10F-ECT-1SN15F-ECT/-1SN20F-ECT/-1SN30F-ECT	R88A-FI1S309

Software

Automation Software Sysmac Studio

Please purchase a DVD and required number of licenses the first time you purchase the Sysmac Studio. DVDs and licenses are available individually. Each model of licenses does not include any DVD.

Product name	Specifications	Number of licenses	Media	Model
Sysmac Studio Standard Edition Ver.1.□□ *1	The Sysmac Studio is the software that provides an integrated environment for setting, programming, debugging and maintenance of machine automation controllers including the NJ/NX-series CPU Units, NY-series Industrial PC, EtherCat Slave, and the HMI. Sysmac Studio runs on the following OS. Windows 7 (32-bit/64-bit version)/Windows 8 (32-bit/64-bit version)/ Windows 8.1 (32-bit/64-bit version)/Windows 10 (32-bit/64-bit version) *2 The Sysmac Studio Standard Edition DVD includes Support Software to set up EtherNet/IP Units, DeviceNet slaves, Serial Communications Units, and Support Software for creating screens on HMIs (CX-Designer). For details, refer to your OMRON website.	--- (Media only)	Sysmac Studio (32 bit) DVD	SYSMAC-SE200D
		--- (Media only)	Sysmac Studio (64 bit) DVD	SYSMAC-SE200D-64
		1 license *3	---	SYSMAC-SE201L
Sysmac Studio Drive Edition Ver.1.□□	Sysmac Studio Drive Edition is a limited license that provides selected functions required for 1S/G5 series Servo settings. This product is a license only. You need the Sysmac Studio Standard Edition DVD media to install it. With Drive Edition, you can use only the setup functions for 1S, G5-series Servo System	1 license	---	SYSMAC-DE001L

*1 The 1S-series Servo Drive unit version 1.3 or later is supported by Sysmac Studio version 1.27 or higher.
*2 Model "SYSMAC-SE200D-64" runs on Windows 10 (64 bit).
*3 Multi licenses are available for the Sysmac Studio (3, 10, 30, or 50 licenses).

Collections of software functional components

Sysmac Library

Sysmac Library is POU Libraries (Function Block and Function) provided for NJ/NX-series Controller.
Please download it from following URL and install to Sysmac Studio.
http://www.ia.omron.com/sysmac_library/

Product	Features	Model
EtherCAT 1S Series Library	The EtherCAT 1S Series Library is used to initialize the absolute encoder, back up and restore the parameters for an OMRON 1S-series Servo Drive with built-in EtherCAT communications. You can use this library to reduce manpower of programming when implementing the processing for a Servo Drive.	SYSMAC-XR011

Combination table

Servo Drive and Servomotor Combinations

The following tables show the possible combinations of 1S-series Servo Drives and Servomotors.
The Servomotors and Servo Drives can only be used in the listed combinations. "☐"at the end of the motor model number is for options, such as the shaft type and brake.

3,000-r/min Servomotors and Servo Drives

Main circuit power supply voltage	Servomotor rated output	Servomotor	Servo Drive
Single-phase 100 VAC	50 W	R88M-1M05030S-☐	R88D-1SN01L-ECT
	100 W	R88M-1M10030S-☐	R88D-1SN01L-ECT
	200 W	R88M-1M20030S-☐	R88D-1SN02L-ECT
	400 W	R88M-1M40030S-☐	R88D-1SN04L-ECT
Single-phase/3-phase 200 VAC	50 W	R88M-1M05030T-☐	R88D-1SN01H-ECT
	100 W	R88M-1M10030T-☐	R88D-1SN01H-ECT
	200 W	R88M-1M20030T-☐	R88D-1SN02H-ECT
	400 W	R88M-1M40030T-☐	R88D-1SN04H-ECT
	750 W	R88M-1M75030T-☐	R88D-1SN08H-ECT
	1.5 kW	R88M-1L1K530T-☐	R88D-1SN15H-ECT
3-phase 200 VAC	1 kW	R88M-1L1K030T-☐	R88D-1SN10H-ECT
	2 kW	R88M-1L2K030T-☐	R88D-1SN20H-ECT
	3 kW	R88M-1L3K030T-☐	R88D-1SN30H-ECT
	4 kW	R88M-1L5K030T-☐	R88D-1SN55H-ECT
	5 kW	R88M-1L4K030T-☐ (Available soon)	
3-phase 400 VAC	750 W	R88M-1L75030C-☐	R88D-1SN10F-ECT
	1 kW	R88M-1L1K030C-☐	R88D-1SN10F-ECT
	1.5 kW	R88M-1L1K530C-☐	R88D-1SN15F-ECT
	2 kW	R88M-1L2K030C-☐	R88D-1SN20F-ECT
	3 kW	R88M-1L3K030C-☐	R88D-1SN30F-ECT
	4 kW	R88M-1L4K030C-☐	R88D-1SN55F-ECT
	5 kW	R88M-1L5K030C-☐	

2,000-r/min Servomotors and Servo Drives

Main circuit power supply voltage	Servomotor rated output	Servomotor	Servo Drive
Single-phase/3-phase 200 VAC	1.5 kW	R88M-1M1K520T-☐	R88D-1SN15H-ECT
3-phase 200 VAC	1 kW	R88M-1M1K020T-☐	R88D-1SN10H-ECT
	2 kW	R88M-1M2K020T-☐	R88D-1SN20H-ECT
	3 kW	R88M-1M3K020T-☐	R88D-1SN30H-ECT
3-phase 400 VAC	400 W	R88M-1M40020C-☐	R88D-1SN06F-ECT
	600 W	R88M-1M60020C-☐	R88D-1SN06F-ECT
	1 kW	R88M-1M1K020C-☐	R88D-1SN10F-ECT
	1.5 kW	R88M-1M1K520C-☐	R88D-1SN15F-ECT
	2 kW	R88M-1M2K020C-☐	R88D-1SN20F-ECT
	3 kW	R88M-1M3K020C-☐	R88D-1SN30F-ECT

1,500-r/min Servomotors and Servo Drives

Main circuit power supply voltage	Servomotor rated output	Servomotor	Servo Drive
3-phase 200 VAC	4 kW	R88M-1M4K015T-☐ (Available soon)	R88D-1SN55H-ECT
	5.5 kW	R88M-1M5K515T-☐ (Available soon)	
	7.5 kW	R88M-1M7K515T-☐	R88D-1SN75H-ECT
	11 kW	R88M-1M11K015T-☐	R88D-1SN150H-ECT
	15 kW	R88M-1M15K015T-☐	
3-phase 400 VAC	4 kW	R88M-1M4K015C-☐	R88D-1SN55F-ECT
	5.5 kW	R88M-1M5K515C-☐	
	7.5 kW	R88M-1M7K515C-☐	R88D-1SN75F-ECT
	11 kW	R88M-1M11K015C-☐	R88D-1SN150F-ECT
	15 kW	R88M-1M15K015C-☐	

1,000-r/min Servomotors and Servo Drives

Main circuit power supply voltage	Servomotor rated output	Servomotor	Servo Drive
3-phase 200 VAC	900 W	R88M-1M90010T-☐	R88D-1SN10H-ECT
	2 kW	R88M-1M2K010T-☐	R88D-1SN20H-ECT
	3 kW	R88M-1M3K010T-☐	R88D-1SN30H-ECT
3-phase 400 VAC	900 W	R88M-1M90010C-☐	R88D-1SN10F-ECT
	2 kW	R88M-1M2K010C-☐	R88D-1SN20F-ECT
	3 kW	R88M-1M3K010C-☐	R88D-1SN30F-ECT

Related Manuals

English Man.No.	Japanese Man.No.	Model	Manual name
I586	SBCE-377	R88M-1□/R88D-1SN□-ECT	AC Servomotors/Servo Drives 1S-Series with EtherCAT Communications User's Manual
W535	SBCA-418	NX701-□□□□	NX-series CPU Unit User's Manual (Hardware)
W593	SBCA-462	NX102-□□□□	NX-series NX102 CPU Unit Hardware User's Manual
W578	SBCA-448	NX1P2-□□□□□□ NX1P2-□□□□□□1	NX-series NX1P2 CPU Unit User's Manual (Hardware)
W500	SBCA-466	NJ501-□□□□ NJ301-□□□□ NJ101-□□□□	NJ-series CPU Unit User's Manual (Hardware)
W501	SBCA-467	NX701-□□□□ NJ501-□□□□ NJ301-□□□□ NJ101-□□□□	NJ-series / NX-series CPU Unit User's Manual (Software)
W507	SBCE-433	NX701-□□□□ NJ501-□□□□ NJ301-□□□□ NJ101-□□□□	NJ-series / NX-series CPU Unit User's Manual (Motion Control)
W556	SBCA-434	NY512-□□□□	NY-series IPC Machine Controller Industrial Box PC Hardware User's Manual
W557	SBCA-435	NY532-□□□□	NY-series IPC Machine Controller Industrial Panel PC Hardware User's Manual
W558	SBCA-436	NY532-□□□□ NY512-□□□□	NY-series IPC Machine Controller Industrial Panel PC / Industrial Box PC Software User's Manual
W559	SBCE-379	NY532-□□□□ NY512-□□□□	NY-series IPC Machine Controller Industrial Panel PC / Industrial Box PC Motion Control User's Manual
Z930	SGFM-710	NX-SL□□□□ NX-SI□□□□ NX-SO□□□□	NX-series Safety Control Unit User's Manual
Z931	SGFM-711	NX-SL□□□□	NX-series Safety Control Unit Instructions Reference Manual
W504	SBCA-470	SYSMAC-SE2□□□	Sysmac Studio Version 1 Operation Manual
I589	SBCE-401	SYSMAC-SE2□□□	Sysmac Studio Drive Function Operation Manual
W487	SBCE-359	CJ1W-NC281 CJ1W-NC481 CJ1W-NC881 CJ1W-NCF81 CJ1W-NC482 CJ1W-NC882 CJ1W-NCF82	CJ-series Position Control Unit Operation Manual
Z922	SJLB-306	G9SP-N10S G9SP-N10D G9SP-N20S	G9SP Series Safety Controller Operation Manual

Sizing Tool for AC Servo Motors

AC Servo motors selection for the entire machine

- User can size all axes in one project with the corresponded Sysmac controller.
- Pre-defined system can be used for common applications.
- Selection of optimized drive, motor and gearbox combination.
- Multiple views are not required: design, adjust and validate at a glance.
- Import sizing file directly to Sysmac Studio for reducing the machine development time.

Quick sizing and selection of AC servo motors

- High variety of mechanical system
- Import CAM from Sysmac Studio
- Kinematics chain architecture includes motor, reducer, loads and motion profile.
- Adjustments can be done in one view and results auto-refreshed.

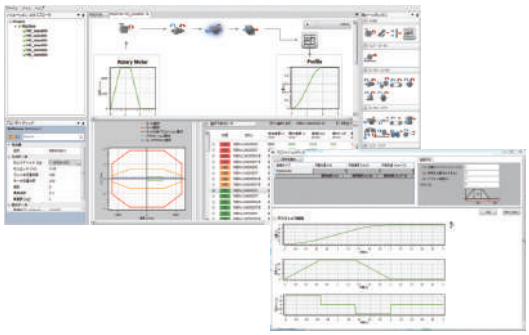

Re-use work done during design phase

- Export sizing file result.
- Import sizing file result in Sysmac Studio.
- EtherCAT configuration, axes settings and drives parameters will be created automatically

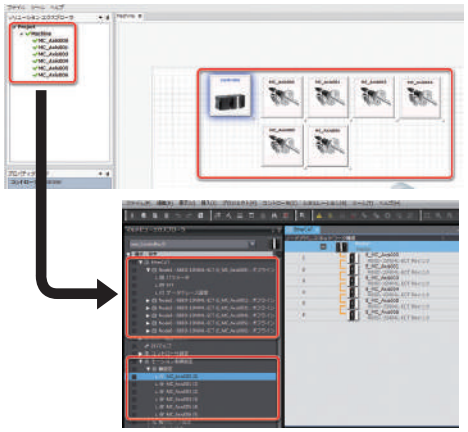

Compatible models

1S series	EtherCAT Communications	R88D-1SN□-ECT
G5 series	EtherCAT Communications for Position Control	R88D-KN□-ECT
G5 series	EtherCAT Communications (Linear Motor Type)	R88D-KN□-ECT-L
G5 series	MECHATROLINK-II Communications	R88D-KN□-ML2
G5 series	General-purpose Pulse Train or Analog Inputs	R88D-KT
G series	MECHATROLINK-II Communications	R88D-GN□-ML2
G series	General-purpose Pulse Train or Analog Inputs	R88D-GT
Smart Step 2	General-purpose Pulse Train	R7D-BP

OMRON AUTOMATION AMERICAS HEADQUARTERS • Chicago, IL USA • 847.843.7900 • 800.556.6766 • automation.omron.com

OMRON CANADA, INC. • HEAD OFFICE
Toronto, ON, Canada • 416.286.6465 • 866.986.6766 • automation.omron.com

OMRON MEXICO • HEAD OFFICE
Ciudad de México • 52.55.5901.4300 • 01.800.386.6766 • mela@omron.com

OMRON ELETRÔNICA DO BRASIL LTDA • HEAD OFFICE
São Paulo, SP, Brasil • 55 11 5171-8920 • automation.omron.com

OMRON ARGENTINA • SALES OFFICE
Buenos Aires, Argentina • +54.11.4521.8630 • +54.11.4523.8483
mela@omron.com

OTHER OMRON LATIN AMERICA SALES
+54.11.4521.8630 • +54.11.4523.8483 • mela@omron.com

Authorized Distributor:

Controllers & I/O
• Machine Automation Controllers (MAC) • Motion Controllers
• Programmable Logic Controllers (PLC) • Temperature Controllers • Remote I/O

Robotics
• Industrial Robots • Mobile Robots

Operator Interfaces
• Human Machine Interface (HMI)

Motion & Drives
• Machine Automation Controllers (MAC) • Motion Controllers • Servo Systems
• Frequency Inverters

Vision, Measurement & Identification
• Vision Sensors & Systems • Measurement Sensors • Auto Identification Systems

Sensing
• Photoelectric Sensors • Fiber-Optic Sensors • Proximity Sensors
• Rotary Encoders • Ultrasonic Sensors

Safety
• Safety Light Curtains • Safety Laser Scanners • Programmable Safety Systems
• Safety Mats and Edges • Safety Door Switches • Emergency Stop Devices
• Safety Switches & Operator Controls • Safety Monitoring/Force-guided Relays

Control Components
• Power Supplies • Timers • Counters • Programmable Relays
• Digital Panel Meters • Monitoring Products

Switches & Relays
• Limit Switches • Pushbutton Switches • Electromechanical Relays
• Solid State Relays

Software
• Programming & Configuration • Runtime

Note: Specifications are subject to change. © 2023 Omron. All Rights Reserved. Printed in U.S.A.